CITY OF SURPRISE
Regular City Council Meeting
16000 N. Civic Center Plaza
Surprise, AZ 85374
Tuesday, January 17, 2023 @ 6:00 PM
COUNCIL CHAMBERS

A. Call To Order

Any prayer or invocation that may be offered before the start of the Regular Council Meeting is a voluntary offering by a private resident of Surprise; has not been previously reviewed or approved by City Council or City staff; should not be considered an endorsement of any particular religion by the City or its officials, as the beliefs, viewpoint, and content are personal to the speaker; and no participation by any person in attendance is required. A list of volunteers is maintained by the office of the City Clerk and interested persons should contact the Clerk's Office for further information.

B. Roll Call

C. Pledge of Allegiance

D. Proclamation and Community Acknowledgements

E. City Manager Report

Annual Firefighter and Police Officer of the year award

F. City Clerk Report

Consideration and action pertaining to **selection of a Vice Mayor** and directing the City Clerk to administer the Oath of Office.

G. Call To The Public

INSTRUCTIONS: In order to address the City Council, you will need to fill out a Call to the Public Form available at the front counter, and then turn it in to the City Clerk before the meeting begins.
Download the Call to the Public form (PDF download requires Adobe Acrobat Reader)
Fill out the Call to the Public form online If submitting form electronically, please submit to City Clerk at least one hour before the meeting start time.
The Call to the Public form is also available at the front counter.

Note: A.R.S. 38-431.01(H)- During this time members of the public may address City Council only on issues within the jurisdiction of the City Council which are not an item on the agenda. At the conclusion of the open call, City Council may respond to criticism, may ask staff to review the matter or may ask that the matter be put on a future agenda. No discussion or action shall take place on any item raised.

Approval of items on the Consent Agenda – all items with an asterisk (*) are considered to be routine matters and will be enacted by one motion and one roll call vote to the City Council. There will be no separate discussion on these items unless a Councilmember requests, in which event the item will be removed from the consent agenda and considered in its normal sequence on the agenda.

Please be aware that Council Members may not discuss or respond to matters raised during call to the public that are not specifically identified on the agenda. Council Members may however, in their discretion, discuss or respond to relevant matters raised during a noticed public hearing or agenda item.

H. Regular City Council Meeting Agenda

CONSENT AGENDA:

1.	Internal	Consideration and action to approve the Regular Council Meeting Minutes for January 3, 2023.	None Sherry Aguilar City Clerk
2.	Citywide	Consideration and action pertaining to approval of an Intergovernmental Agreement (IGA) with the City of Glendale to utilize Glendale's hosted and developed municipal tax application; Resolution #2023-02.	None Andrea Davis Finance
3.	District 3	Consideration and action pertaining to approval of the Final Plat entitled, "Toll at Prasada, Phase I Unit A Lot 409 & Tract A" and dated November 16, 2022, a property generally located west of Cotton Lane, between Cactus Road and Peoria Avenue; Case FS22-1181.	None Jessica Brinton Community Development
4.	District 6	Consideration and action pertaining to approval of the Final Plat entitled, "Marley Park Promenade Amended" and dated October 10, 2022, a property located at the northeast corner of Cactus Road and Reems Road; Case FS22-1093.	Tanner Wessel Community Development
5.	District 1	Consideration and action pertaining to the Final Plat entitled,"Heritage Asante – Parcel 7" and received November 30, 2022, a property generally located north of Grand Avenue and west of Pat Tillman alignment; Case FS22-1268.	Chris Sexton Community Development
6.	District 3	Consideration and action pertaining to approval of the Final Plat entitled, "Final Re-Plat Toll at Prasada, Unit J – Phase 3" and date received December 1, 2022, a property generally located west of Cotton Lane, between Cactus Road and Peoria Avenue; Case FS22-0742.	Chris Sexton Community Development
7.	Citywide	Consideration and action pertaining to the renewal and acceptance of the FFY2023 U.S. Department of Justice Drug Enforcement Administration (DEA) Task Force Agreement and amending the FY2023 budget by moving budget authority of $39,700 from Contingency within the Grants Fund to Project #G31245 FFY23 DEA Task Force; Resolution #2023-06.	Police
8.	District 1	Consideration and action pertaining to approval of the Final Plat entitled, "Windstone Ranch Phase 1" and received on September 19, 2022, a property generally located at the northeast corner of Happy Valley Road and 151st Avenue; Case FS21-1007.	Chris Sexton Community Development
9.	Citywide	Consideration and action appointing members to the Surprise Redistricting Advisory Committee with terms of service until such time as the Committee's redistricting recommendations have been presented to the City Council in accordance with Resolution #2023-05.	Lloyd Abrams Community Development
	REGULAR AGENDA ITEM - PUBLIC HEARING:		
	REGULAR AGENDA ITEM - NON-PUBLIC HEARING:		
10.	Citywide	Consideration and action pertaining to the 2023 Legislative Agenda.	Jodi Tas City Manager Office
11.	Citywide	Consideration and action pertaining to approval of an amendment to the Fiscal Year 2023 budget by moving	Danielle Osborne

		budget authority of $450,000.00 within the Municipal Art Fund from contingency to Project R51020 for the Stadium Art Project; Resolution #2023-03	Human Svcs and Comm Vitality
12.	Citywide	Consideration and action authorizing the City of Surprise to pursue, and apply for, financial assistance from the Water Infrastructure Financing Authority (WIFA) in an amount not to exceed $35,000,000 for the SPA 1 Capacity and Enhancements Capital Improvement Project, P71490; Resolution #2023-07.	Water Resource Management
13.	District 1	Consideration and action pertaining to a continuance of the application for a Major PAD Amendment to the Vista Montanas Planned Area Development as memorialized in Ordinance #2022-20, to a date certain of March 21, 2023.	Chris Sexton Community Development

I. Other Business and Future Agenda Items

J. City Council Reports

K. Executive Session

For information Purposes; Upon a public majority vote of a quorum of the City Council, the Council may hold an executive session, which will not be open to the public, but for only the following purposes:

- discussion or consideration of personnel matters (A.R.S. §38-431.03 (A)(1));
- discussion or consideration of records exempt by law from public inspection (A.R.S. §38-401.03 (A)(2));
- discussion or consultation for legal advice with the city's attorneys (A.R.S. §38-431.03 (A)(3));
- discussion or consultation with the city's attorneys regarding the city's position regarding contracts that are the subject of negotiations, in pending or contemplated litigation, or in settlement discussions conducted in order to avoid or resolve litigation (A.R.S.§38-431.03 (a)(4));
- discussion or consultation with designated representatives of the city in order to consider its position and instruct its representatives regarding negotiations with employee organizations (A.R.S. §38-431.03 (A)(5)); or
- discussion, consultation or consideration for international and interstate negotiations or for negotiations by a city or town, or its designated representatives, with members of a tribal council, or its designated representatives, of an Indian reservation located within or adjacent to the city or town. A.R.S. §38-401.03 (A)(6)).
- discussing or consulting with designated representatives of the city in order to consider its position and instruct its representatives regarding negotiations for the purchase, sale or lease of real property (A.R.S. §38-431.03 (A)(7)).

Confidentiality Requirements Pursuant to A.R.S. §38-431.03(C)(D): Any person receiving executive session information pursuant to A.R.S. §38-431.02 shall not disclose that information except to the Attorney General or County Attorney by agreement of the City Council, or as otherwise ordered by a court of competent jurisdiction.

The council may vote to hold an executive session for the purpose of obtaining legal advice from the Board's attorney on any matter listed on the agenda pursuant to A.R.S. § 38-431.03(A)(3).

L. Adjournment

SHERRY ANN AGUILAR, CITY CLERK, MMC

POSTED: Thursday, January 12th, 2023 @ 10:15 a.m.

SPECIAL NOTE: PERSONS WITH SPECIAL ACCESSIBILITY NEEDS, INCLUDING LARGE PRINT MATERIALS OR INTERPRETER, SHOULD CONTACT THE CITY CLERK'S OFFICE @ 623.222.1200 OR TTY 623.222.1002, BY NO LATER THAN 24 HOURS IN ADVANCE OF THE REGULAR SCHEDULED MEETING TIME.

CITY OF SURPRISE
Regular City Council Meeting

Council Meeting Date: January 17, 2023
Submitting Department: City Clerk
Staff Recommendations:

Contact Person:
District: Internal

Consent: No Regular: No Public Hearing: No Report/Discussion: No

Agenda Wording:
Invocation

Motion:

Background:

Objective Analysis:

Policy Compliant:

Financial Impact:

Budget Impact:
FTE Impact:

ATTACHMENTS:

CITY OF SURPRISE
Regular City Council Meeting

Council Meeting Date: January 17, 2023
Submitting Department: City Manager Office
Staff Recommendations: None

Contact Person:
District: Citywide

Consent: No Regular: No Public Hearing: No Report/Discussion: No

Agenda Wording:

Annual Firefighter and Police Officer of the year award

Motion:

Glen Stark and Greg Akers from VFW Post #285 will present the Annual Firefighter of the year award to Roy Michael and the Police Officer of the year award to Ariel Tejada.

Background:

Objective Analysis:

Policy Compliant:

Financial Impact:

Budget Impact:

FTE Impact:

ATTACHMENTS:

CITY OF SURPRISE
Regular City Council Meeting

Council Meeting Date: January 17, 2023
Submitting Department: City Clerk
Staff Recommendations: None

Contact Person: Sherry Aguilar, City Clerk
District: Citywide

Consent: No Regular: Yes Public Hearing: No Report/Discussion: No

Agenda Wording:
Consideration and action pertaining to **selection of a Vice Mayor** and directing the City Clerk to administer the Oath of Office.

Motion:
I move to select a Vice Mayor and direct the City Clerk to administer the Oath of Office.

Background:

Sec. 2-41. - Vice-mayor; selection and role.

(a)

Eligibility. Any council member, other than the mayor, may serve as vice-mayor, whether or not the member has served as vice-mayor previously.

(b)

Selection.

(1)

Not later than January 30th of each year, the city council shall select one of its members, other than the mayor, to serve as vice-mayor. The member selected as vice-mayor will serve as such until the member resigns the office, vacates council, or is replaced by another member as vice-mayor.

(2)

Any council member may nominate any council member, including him/herself, to serve as the vice-mayor. All nominations must occur prior to voting. The council must vote by written ballot. The candidate receiving a majority of the votes cast will serve as vice-mayor. In the event that no candidate receives a majority of votes cast, the two candidates receiving the highest number of votes will be considered in a run-off vote. Voting must be repeated until a vice-mayor is selected. The meeting may not adjourn or recess until a vice-mayor is selected.

(c)

[Absence or inability to perform duties.] The vice-mayor will perform the duties of the mayor in the absence or inability of the mayor to perform his or her duties. In the absence or inability of the vice-

mayor to perform the duties of the mayor, the most senior council member will perform the duties of mayor/vice-mayor. Seniority is determined by the then current number of consecutive years the member has served on the council.
(Ord. No. 2013-09, § 2(Exh. A), 11-12-13)

Objective Analysis:

Policy Compliant:

Financial Impact:

Budget Impact:
FTE Impact:

ATTACHMENTS:

CITY OF SURPRISE
Regular City Council Meeting

Council Meeting Date: January 17, 2023
Submitting Department: City Clerk
Staff Recommendations: None

Contact Person: Sherry Aguilar, City Clerk
District: Internal

Consent: Yes Regular: No Public Hearing: No Report/Discussion: No

Agenda Wording:
Consideration and action to approve the Regular Council Meeting Minutes for January 3, 2023.

Motion:
I move to approve the Regular Council Meeting Minutes for January 3, 2023.

Background:

Objective Analysis:

Policy Compliant:

Financial Impact:

Budget Impact:
FTE Impact:

ATTACHMENTS:
1. 01032023 Regular Council Meeting Minutes

CITY OF SURPRISE

Regular City Council Meeting
16000 North Civic Center Plaza
Surprise, AZ 85374

Tuesday, January 3, 2023 @ 6:00PM

A. Call To Order

Mayor Hall called the Regular Council Meeting of Tuesday, January 3, 2023 to order at 6:00 p.m., located at Surprise City Hall, 16000 N. Civic Center Plaza, Surprise, AZ. 85374.

1. Invocation

The Invocation was led by Surprise resident, Shawna Daigle.

B. Roll Call

In attendance with Mayor Hall were Vice-Mayor Alyson Cline, Councilmembers Jack Hastings, Ken Remley, Patrick Duffy, Chris Judd, and Nicholas Haney.

C. Pledge of Allegiance

Led by Mayor Hall.

D. Proclamation and Community Acknowledgements

None

E. City Manager Report

Report on Police Department Activity, Chief Pina gave a summary of Police activity with drug arrests in one of the City's neighborhoods, the Police were able to surveil and make arrests; Chief Pina thanked Surprise Police Officers and residents of Surprise for stepping up to assist.

F. City Clerk Report

City Clerk, Sherry Ann Aguilar issued the Oath of Office and presented Election Certification Plaques to new incoming Councilmember Nicholas Haney (District 1), Re-election of Councilmember Jack Hastings (District 5), and Re-election of Councilmember Chris Judd (District 6).

Councilmember Haney read a statement for the record thanking his wife Nichole and his family and friends for their support and commented that he is ready to get to work for the residents of his District and for the City of Surprise.

G. Call To The Public:

None

1. CONSENT AGENDA:

Councilmember Judd made the motion to approve the Consent Agenda consisting of items 2 through 4, Councilmember Remley seconded the motion. 7 yes votes, motion carried. Items included:

2. Consideration and action to approve the Regular Council Work Session and Regular Council Meeting Minutes of December 20, 2022.

3. Consideration and action pertaining to the approval of a Fiscal Year 2023 budget amendment to purchase a Fire Engine for Fire Station #309, Resolution 2023-04.

4. Consideration and action pertaining to approval of the Final Plat entitled “Short Final Plat” and dated November 11, 2022, a property generally located on the southeast corner of Adobe Road and 225th Avenue; Case FS22-1232.

H. Regular City Council Meeting Agenda

5. Consideration and action establishing the Surprise Redistricting Committee; Resolution #2023-05.

Community Development Director, Lloyd Abrams introduced Doug Johnson and Shalice Tilton with National Demographics to explain the redistricting process and discuss the process and timeline.

Mr. Johnson introduced himself and gave history on working with the City since the 1st districting process in 1992. We are kicking off the process starting in February, target date to complete is June 6th, 2023. Mr. Johnson highlighted the 3 criteria of federal laws and requirements; 1. Equal population 2. Comply with Federal Voting Rights Act maintaining the Latino population areas, keeping them together as the committee is going through the process and 3. No racial gerrymandering and following Arizona Statutes.

Shalice Tilton with NDC continued the presentation and highlighted the committee meetings including public outreach and highlighting communities of interest and the redistricting mapping tools available to committee members and residents. We have gathered information from your planning department including subdivisions, special planning areas, water facilities, etc. Ms. Tilton commented that the redistricting website is almost ready and will be linked on surpriseaz.gov/redistricting.

Councilmember Remley asked if we are going to use the census from a few years ago or what we have today, Mr. Johnson commented that it would be the most recent census numbers from 2020.

Councilmember Remley also commented that we are experiencing a lot of growth, a lot of new residents are moving into Surprise, how much of a margin can be calculated into the district boundaries of our City, Mr. Johnson responded that there cannot be more than a 10% deviation.

Councilmember Hastings asked what if a Councilmember was redistricted out of their district, City Attorney, Robert Wingo commented that there is a compelling case that redistricting does not create a vacancy; in looking at the law, in my opinion it would allow that person to serve through the term until the next election, there is no case study that says this would create a vacancy.

Councilmember Judd asked how the committee is being set up, Community Development Director, Lloyd Abrams commented that the structure will consist of the Mayor selecting 3 at-large residents and each Councilmember will select one resident from their districts; the Committee Members will work alongside the consultant and staff and bring back recommendations for a Council vote.

Vice-Mayor Cline asked how do we recommend someone to the commission, and will you have your meeting dates set in case the public wants to attend

the meetings, Community Development Director, Lloyd Abrams commented that the agenda has been set that it is included in the Council Packet; 3 public meetings are set and we are working on the locations, we will keep Council posted on updates.

Mayor Hall asked about the mapping, if a resident has a suggestion for a map, do they email it to you, Community Development Director, Lloyd Abrams commented yes there will be an email address where they can send the maps to us, we will forward to the consultant to compile and bring to the committee members for review.

Councilmember Judd made the motion to approve Resolution No. 2023-05, Vice-Mayor Cline seconded the motion. 7 yes votes, motion carried.

I. Other Business and Future Agenda Items

No items recommended.

J. City Council Reports

Councilmember Haney expressed gratitude to staff, very grateful for their support. Looking forward to getting out and meeting folks, will hold District Meetings, there are a lot of subjects to discuss; will coordinate a schedule soon.

Vice-Mayor Cline commented that she has 3 meetings in January; AZ Traditions and Sun City Grand, one is for the hearing impaired community.

Councilmember Duffy reported that Saturday, January 7th will be the next meet and greet at Spencer's Place at 9:00 a.m. Last weekend was exciting, participated in an All American golf tournament and it was held in Sterling Grove this year.

Councilmember Judd also attended the All American Golf Tournament and it was a fantastic event. The next District 6 Community Meeting will be January 18th.

Councilmember Hastings thanked residents of District 5 for re-electing him, congrats to Councilmember Haney, received over 50% in a 3 way race; that is not an easy thing to do. Next District 5 Community Meeting will be the 2nd Tuesday of the month at State 48 on January 10th.

Councilmember Remley announced Happy New Year to everyone, 2022 will be a memorable and tough year for many of us surviving COVID. Proud that Surprise

has an AAA bond rating, thanked Finance for their hard work managing our money. Will still be holding his monthly meeting on the 4th Wednesday of the month at Hollyhock Senior Center, 6:00 p.m. There are a lot of events taking place in the City, one of the best kept secrets is the Surprise Pops Orchestra at the Vista Center, attend with a donation of canned foods.

Mayor Hall announced 7th Annual Martin Luther King Day will take place on Saturday, January 14th at the Vista Center of the Arts from 11:00 a.m. to 2:00 p.m., previous years has been held here at City Hall.

L. Adjournment

Councilmember Remley made the motion to adjourn the Regular Council Meeting of Tuesday, January 3, 2023 @ 6:52 p.m. Seconded by Council member Hastings. Unanimous vote to adjourn.

_____
Skip Hall, Mayor

ATTEST:

_____
Sherry Ann Aguilar, City Clerk, MMC

CERTIFICATION:

I, Sherry Ann Aguilar, City Clerk for the City of Surprise, Maricopa County, Arizona, do hereby verify that these are the true and correct minutes of the Regular City Council Meeting of **Tuesday, January 3, 2023.**

_____
Sherry Ann Aguilar, City Clerk, MMC

CITY OF SURPRISE
Regular City Council Meeting

Council Meeting Date: January 17, 2023

Contact Person: Andrea Davis, DIRECTOR - FINANCE

Submitting Department: Finance

District: Citywide

Staff Recommendations: None

Consent: Yes Regular: No Public Hearing: No Report/Discussion: No

Agenda Wording:

Consideration and action pertaining to approval of an Intergovernmental Agreement (IGA) with the City of Glendale to utilize Glendale's hosted and developed municipal tax application; Resolution #2023-02.

Motion:

I move to approve Resolution #2023-02.

Background:

A.R.S. section 42-6001 establishes that the Arizona Department of Revenue (ADOR) will collect and administer municipal privilege, transaction and use taxes (collectively hereinafter, "Taxes") for all Arizona cities and towns. As part of its administration of the taxes, ADOR shall provide each city or town with access to data covering the amount of tax reported, and the amount of tax distributed to that specific city or town.

Objective Analysis:

The agreement will allow the City to utilize municipal taxes data for reporting and research purposes while adhering to City policies and the mission of the Finance Department.

Policy Compliant:

This action is compliant with City and Council policies.

Financial Impact:

The ongoing costs incurred through the IGA are budgeted for in the current Finance General Fund base budget.

Budget Impact:

This agreement will not have a budgetary impact. The FY2023 adopted budget includes appropriations for expenses related to this agreement, and therefore, does not require a budget amendment.

FTE Impact:

There is no FTE impact with this action.

ATTACHMENTS:

1. Resolution No.2023-02 City of Glendale IGA
2. Surprise - IGA AZ Tax Central

RESOLUTION 2023-02

A RESOLUTION OF THE MAYOR AND COUNCIL OF THE CITY OF SURPRISE, ARIZONA, APPROVING AN INTERGOVERNMENTAL AGREEMENT WITH THE CITY OF GLENDALE FOR ACCESS TO MUNICIPAL TRANSACTION PRIVILEGE TAX DATA ON GLENDALE'S TAX APPLICATION.

WHEREAS, pursuant to Arizona Revised Statute §11-952, et seq*.,* The City of Surprise has the authority to enter into intergovernmental agreement with other governmental entities for the purposes set forth within; and

WHEREAS, A.R.S. §42-6001 et seq. establishes that the Arizona Department of Revenue (ADOR) shall collect and administer any transaction privilege and affiliated excise taxes imposed by any city or town in Arizona; and

WHEREAS as part of their administration of the taxes, ADOR shall provide each city or town access to data covering the amount of taxes reported and the amount of taxes distributed to that specific city and town; and

WHEREAS, the purpose of this Agreement is to provide the City of Glendale the mechanism to allow the City of Surprise to subscribe to the City of Glendale hosted and developed municipal tax application (TAX APP); and

WHEREAS, the intergovernmental agreement establishes the platform whereby the City of Surprise can access the TAX APP and reimburse the City Glendale for the costs related to the administration and maintenance of the TAX APP.

NOW, THEREFORE, BE IT RESOLVED by the City Council of the City of Surprise, Arizona, as follows.

Section 1. The City of Surprise hereby agrees to enter into an intergovernmental agreement between the City of Surprise and the City of Glendale for access to Glendale's municipal transaction privilege tax application.

Section 2. Bob Wingenroth, City Manager, or his designees, are authorized to conduct all negotiations and to execute and submit all documents and other necessary or desirable instruments in connection with said agreement.

APPROVED AND ADOPTED this _____day of _____, 2023.

_____
Skip Hall, Mayor

Attest:

_____
Sherry Aguilar, City Clerk

Approved as to form:

_____
Robert Wingo, City Attorney

INTERGOVERNMENTAL AGREEMENT
BETWEEN
THE CITY OF GLENDALE
AND
THE CITY OF SURPRISE

THIS INTERGOVERNMENTAL AGREEMENT (the "Agreement" or "IGA") is entered into this ____ day of _____, 2022, pursuant to Arizona Revised Statutes (ARS) §11-952, between the **City of Glendale** ("**GLENDALE**") acting by and through its city council and the **City of Surprise** ("**SURPRISE**"), acting by and through its city council. ARS. §42-6001 establishes that the Arizona Department of Revenue ("**DOR**") will collect and administer municipal privilege, transaction and use taxes ("**Taxes**") for all Arizona cities and towns. As part of their administration of the Taxes, DOR shall provide each city or town access to data covering the amount of Taxes reported and the amount of Taxes distributed to that specific city and town. The purpose of this Agreement is to provide **GLENDALE** the mechanism to allow other cities and towns to cooperatively use the **GLENDALE** hosted and developed **GLENDALE TAX APPLICATION** ("**TAX APP**") to access and interact with the Statewide Tax data supplied by DOR.

RECITALS

1. **GLENDALE** is authorized to enter into intergovernmental agreements by Arizona Revised Statutes§ 11-951, et seq., and the disclosure of information relating to State Taxes and Municipal Taxes is governed by A.R.S. § 42-2001, *et seq*., and by Model City Tax Code § 510.

2. **SURPRISE** is authorized by Arizona Revised Statutes§ 11-951, *et seq*., and the disclosure of information relating to State Taxes and Municipal Taxes is governed by A.R.S. § 42-2001, *et seq*., and by Model City Tax Code § 510.

3. This Agreement establishes the structure whereby other cities and towns access the **TAX APP** for an annual subscription fee.

THEREFORE, in consideration of the mutual agreements expressed in this Agreement, it is agreed as follows:

I. SCOPE OF AGREEMENT

1. **TAX APP** provides searches, dashboards, and automated notifications for the municipal tax data furnished by **DOR**.

2. **SURPRISE** agrees **GLENDALE** will maintain, upgrade, and administer the **TAX APP**.

3. **SURPRISE** will work with **GLENDALE** to establish role-based access control permissions for each user in the **TAX APP**.

4. All **SURPRISE** users must have **SURPRISE** access credentials in order to be granted permissions to use the **TAX APP**. This requires that users have the appropriate background checks from their organizations that meet or exceed screening requirements established by ARS §41-4401.

5. Support services will be provided via **GLENDALE's** customer portal.

6. Outages due to scheduled or emergency network, software and/or hardware maintenance will be broadcast to authorized users in advance.

7. Any failure to follow **GLENDALE's** acceptable use policy of the **TAX APP** may result in revocation of the access to the **TAX APP**.

8. Municipal tax data hosted by **GLENDALE** and presented in the **TAX APP** is confidential information and may not be distributed or copied except as permitted by ARS §42-2003. The data sources are furnished by the DOR and are considered confidential information as defined in ARS §42-2001. **GLENDALE** does not control and cannot guarantee the relevance, timeliness, or accuracy of this data and provides no warranty, expressed or implied, as to the accuracy, reliability or completeness of furnished data, and **SURPRISE** releases **GLENDALE** from any liability related to the data. Data types include but may not be limited to the information detailed set forth in Appendix B in the respective intergovernmental agreement with the State of Arizona and **SURPRISE**.

9. The **TAX APP** supports the security model listed below. Each jurisdiction will select a security profile below for each user designated for **TAX APP** access. **SURPRISE** acknowledges each individual user should be assigned the least privileged access needed depending on their job duties. **SURPRISE** also acknowledges information obtained from DOR, and displayed by **GLENDALE**, is confidential information and may only be disclosed as authorized by ARS§ 42-2003.

Role	**Role Description**

City Admin	- Add, update, and suspend user accounts - View city employee activity logs - Search, view, and interact with DOR data
City User	- Search, view, and interact with DOR data

10. **SURPRISE** City admin user will suspend employee access and notify **GLENDALE** within 1 business day of employee termination, reassignment, or departure.

11. **Compensation. SURPRISE** shall pay **GLENDALE** as defined in the Compensation Schedule**,** which is attached hereto as Exhibit A. **SURPRISE** will be billed by **GLENDALE**, in advance of its access to the **TAX APP.** Payments shall be due thirty (30) days from the invoice date.

II. MISCELLANEOUS PROVISIONS

1. This Agreement shall become effective on the date of execution and shall continue in full force and effect for one (1) year. The Agreement will renew automatically unless one of the parties notifies the other no later than thirty (30) days prior to the expiration of the term that the party wishes not to renew the Agreement.

2. **SURPRISE** or **GLENDALE** may cancel this Agreement at any time without penalty or further obligation, as long as the party wishing to cancel the Agreement gives the other

party at least ninety (90) calendar days advance written notice of its intention to cancel. No pro-rata refund will be returned.

3. This Agreement is subject to the cancellation provisions of ARS §38-511.

4. Cancellation pursuant to either Paragraphs 2 or 3 above shall be effective when written notice from the chief executive officer of one city/town is received by the other party to this Agreement, unless the notice specifies a later time.

5. To the extent permitted by law, each party (as "Indemnitor") agrees to indemnify, defend, and hold harmless the other party (as "Indemnitee") from and against any and all claims, losses, liability, costs, or expenses (including reasonable attorney's fees) whether direct or indirect (hereinafter collectively referred to as "Claims") arising out of **TAX APP** use, but only to the extent that such Claims which result in vicarious/derivative liability to the Indemnitee are caused by the act, omission, negligence, misconduct, or other fault of the Indemnitor, its officers, officials, agents, employees, or volunteers.

6. **SURPRISE** acknowledges that **GLENDALE** is not responsible for the security practices of **SURPRISE**, and consequently **SURPRISE** releases and holds harmless **GLENDALE** for any liability and/or damages that emerge from a data breach that occurs as a result of **SURPRISE's** security practices or was otherwise caused by or was the fault of **SURPRISE**.

7. **SURPRISE** and **GLENDALE** both have an intergovernmental agreement with the State of Arizona whereby each obtains taxpayer information from the State subject to the

conditions set forth in the intergovernmental agreement, including those pertaining to confidentiality as defined in ARS §42-2001, and that confidential information may not be disclosed except as provided by statute, ARS §42-200l(B). To the extent that information being utilized by **SURPRISE** and hosted by **GLENDALE** may have been obtained initially from the State, each agrees to abide by the terms and conditions set forth in their respective intergovernmental agreements with the State of Arizona.

8. All notices or demands upon any party to this Agreement shall be in writing and shall be delivered in person or sent by mail addressed as follows:

CITY OF SURPRISE
Department
Attn:
16000 N Civic Center Plaza
Surprise, AZ 85374

CITY OF GLENDALE
Budget and Finance Department, Tax & License Division
Attn: Tax and License Manager
5850 W. Glendale Avenue, Suite 104
Glendale, AZ 85301

9. This Agreement contains the entire understanding between the parties, and no statements, promises or inducements made by either party, their agents or employees that are not contained herein shall be valid or binding. This Agreement may not be altered except in writing and signed by each party hereto.

10. The failure to exercise any right, power or privilege under this Agreement shall not constitute a waiver thereof, nor shall a single or partial exercise thereof preclude any other or further exercise of that or any right, power or privilege.

11. In the event that any provision, or any portion of any provision, of this Agreement is held invalid, illegal or unenforceable, such invalidity, illegality or unenforceability shall have no effect on the remaining portion of any provision or any other provision which can be given effect without the invalid provision and to this end the provisions of this Agreement shall be deemed to be severable.

IN WITNESS WHEREOF, the parties have executed this Agreement the day and year first above written.

CITY OF GLENDALE
a municipal corporation
KEVIN PHELPS, City Manager

APPROVED AS TO FORM AND WITHIN THE POWER AND AUTHORITY GRANTED UNDER THE LAWS OF THE STATE OF ARIZONA TO THE CITY OF GLENDALE

ATTEST:

_____
Julie K. Bower, City Clerk (SEAL)

APPROVED AS TO FORM:

_____
Michael D. Bailey, City Attorney

CITY OF SURPRISE
a municipal corporation
XX, City Manager

APPROVED AS TO FORM AND WITHIN THE POWER AND AUTHORITY GRANTED UNDER THE LAWS OF THE STATE OF ARIZONA TO THE CITY OF SURPRISE

ATTEST:

_____
City Clerk (SEAL)

APPROVED AS TO FORM:

_____
City Attorney

EXHIBIT A
Compensation Schedule

1. **SURPRISE** will be billed $10,000 on September 1st of each year. The invoice is due thirty (30) days from the invoice date.
2. **SURPRISE** will be billed a one-time onboarding fee of $2,000 upon approval of the IGA. The invoice is due thirty (30) days from the invoice date.

CITY OF SURPRISE
Regular City Council Meeting

Council Meeting Date: January 17, 2023 Contact Person: Jessica Brinton
Submitting Department: Community Development District: District 3
Staff Recommendations: None

Consent: Yes Regular: No Public Hearing: No Report/Discussion: No

Agenda Wording:
Consideration and action pertaining to approval of the Final Plat entitled, "Toll at Prasada, Phase I Unit A Lot 409 & Tract A" and dated November 16, 2022, a property generally located west of Cotton Lane, between Cactus Road and Peoria Avenue; Case FS22-1181.

Motion:
I move to approve the Final Plat entitled, "Toll at Prasada, Phase I Unit A Lot 409 & Tract A" and dated November 16, 2022.

Background:
The subject request involves a Re-Plat for Unit A of the Toll at Prasada project. Unit A was previously platted under case FS18-260, MCR 1444-03.

Objective Analysis:
The subject Final Plat meets the requirements of the Prasada PAD, in addition to other requirements as set forth in the LDO. All city reviewing departments have reviewed the request and expressed no concerns.

Policy Compliant:
The Surprise General Plan 2035 shows the subject property as lying within the Neighborhood Character Area, which supports residential development of up to 8 DU/Ac or more, provided appropriate transitions are made between the various Neighborhood types included within the character area. The subject request will not alter the density of the development and Unit A will remain consistent with the General Plan. The site also lies within the 0-6 DU/Ac ribbon of the Luke Air Force Base Graduated Density Concept (GDC); however, the site is integral to the larger Sterling Grove project, which is approved for 2,207 lots overall and meets the guidance offered by the GDC.

Financial Impact:
While this item does not have an immediate or direct financial impact, ongoing development activity in the City will inevitably have a future financial impact as additional resources are needed to provide city services.

Budget Impact:

There is no anticipated budget impact related to this item.

FTE Impact:

This item does not have an impact on current staff levels.

ATTACHMENTS:

1. 00 - FS22-1181 Toll at Prasada Unit A Re-Plat - Staff Report 011723 CC
2. 01 - Toll at Prasada Unit A Re-Plat Vicinity Map
3. 02 - Toll at Prasada Unit A Re-Plat Case Map
4. 03 - Toll at Prasada Unit A Re-Plat Final Plat
5. FS22-1181 Toll at Prasada Unit A Re-Plat 011723 CC

SURPRISE
ARIZONA

FINAL PLAT

REPORT TO THE CITY COUNCIL

Case: **FS22-1181**

Project Name: Toll at Prasada Unit A Re-Plat

Council District: 3 - Mesquite

Meeting Date: **January 17, 2023**

Planner: Jessica Brinton

Owner: Toll Prasada, LLC

Applicant: Aaron Insco of Toll Bros, Inc.

Request: A Re-Plat of Toll at Prasada Phase I Unit A Lot 409 & Tract A in the Prasada PAD

Site Location: Generally located west of Cotton Lane, between Cactus Road and Peoria Avenue

General Plan Conformance: The proposal is consistent with the Surprise General Plan 2035

Findings:

- The proposed Final Plat is consistent with the Surprise General Plan 2035.
- The proposed Final Plat is consistent with the Prasada PAD.
- The proposed Final Plat is consistent with the applicable City of Surprise regulations.

Alternative Actions: **Approve** – Approval of the proposed Final Plat will allow the applicant the ability to subdivide the property as proposed.

Deny – Denial of the requested Final Plat will prevent the applicant from subdividing the property as proposed.

ADDITIONAL INFORMATION:

The subject request involves a Re-Plat for Unit A of the Toll at Prasada project. Unit A was previously platted under case FS18-260, MCR 1444-03. The subject request aims to change the configuration of Lot 409 and create a tract that will be dedicated to the HOA.

SURROUNDING ZONING:

The following map depicts the existing zoning of the subject site and its surroundings.

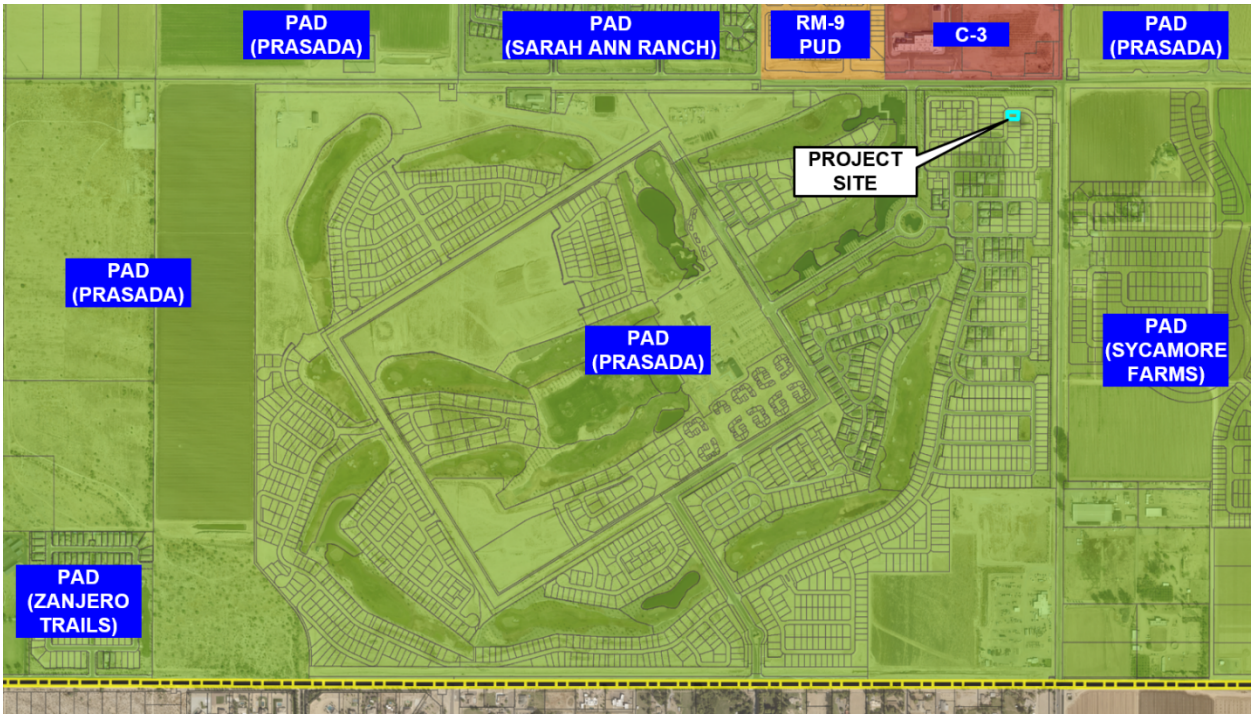

PAD (Prasada)	PAD (Prasada)	PAD (Prasada)
PAD (Prasada)	**PAD (Prasada)**	PAD (Prasada)
PAD (Prasada)	PAD (Prasada)	PAD (Prasada)

BACKGROUND:

June 22, 2006: The City Council approved the original Prasada PAD under case PAD05-465.

December 21, 2016: Staff approved a Minor Amendment to the Lake Village portion of the Prasada PAD under case FS16-400 for the purpose of revising the Lake Village land plan and development standards.

February 12, 2018: Staff approved a Minor Amendment to the Toll Brothers' portion of the Prasada Lake Village under case FS17-587 for the purpose of revising specific development standards related to the Toll Brothers development.

April 17, 2018: The City Council approved the original Preliminary Plat for Toll at Prasada under case FS17-394.

January 15, 2019: The City Council approved the Final Plat for Toll at Prasada Phase I Infrastructure under case FS18-290.

March 5, 2019: The City Council approved the Final Plat for Unit A under case FS18-260.

August 6, 2019: The City Council approved the Final Plat for Toll at Prasada Phase 2 Infrastructure under case FS19-061.

August 19, 2022: The applicant filed for a Re-Plat for Lot 409 of Unit A under case FS22-1181, the subject case.

ANALYSIS AND DISCUSSION:

Lot 409 of Unit A was planned as a shallow-wide lot when the final plat was approved. The subject re-plat is needed due to the configuration of Lot 409 no longer being a shallow-wide. The land within the northern portion of the existing Lot 409 will be a newly created tract that will be landscaped and given to the HOA for ownership and maintenance.

The subject re-plat is shown below:

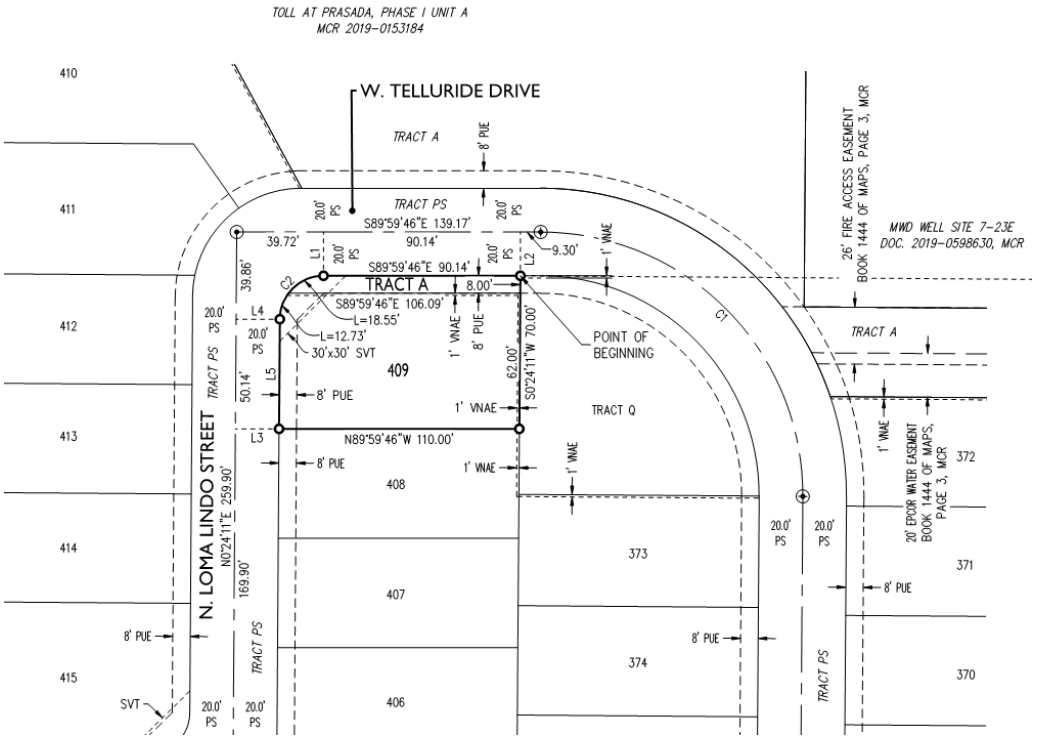

CONFORMANCE WITH ADOPTED PLANS:

Surprise General Plan 2035: The Surprise General Plan 2035 shows the subject property as lying within the Neighborhood Character Area, which supports residential development of up to 8 DU/Ac or more, provided appropriate transitions are made between the various Neighborhood types included within the character area. The subject request will not alter the density of the development and Unit A will remain consistent with the General Plan. The site also lies with the 0-6 DU/Ac ribbon of the Luke Air Force Base Graduated Density Concept; however, the site is integral to the larger Sterling Grove project, which is approved for 2,207 lots overall and meets the guidance offered by the GDC.

REVIEWING AGENCIES:

In addition to the standard city reviewing agencies, who indicate no objections to the requests, Luke Air Force Base, Maricopa Water District, and Maricopa County Flood Control District were included in the routing of this case. These agencies also indicate no objections.

SUMMARY:

The subject Final Plat meets the requirements of the Prasada PAD, in addition to other applicable requirements as set forth in the LDO. All city reviewing departments have reviewed the request and expressed no concerns.

ATTACHMENTS:

01 Toll at Prasada Unit A Re-Plat Vicinity Map
02 Toll at Prasada Unit A Re-Plat Case Map
03 Toll at Prasada Unit A Re-Plat Final Plat
PPT

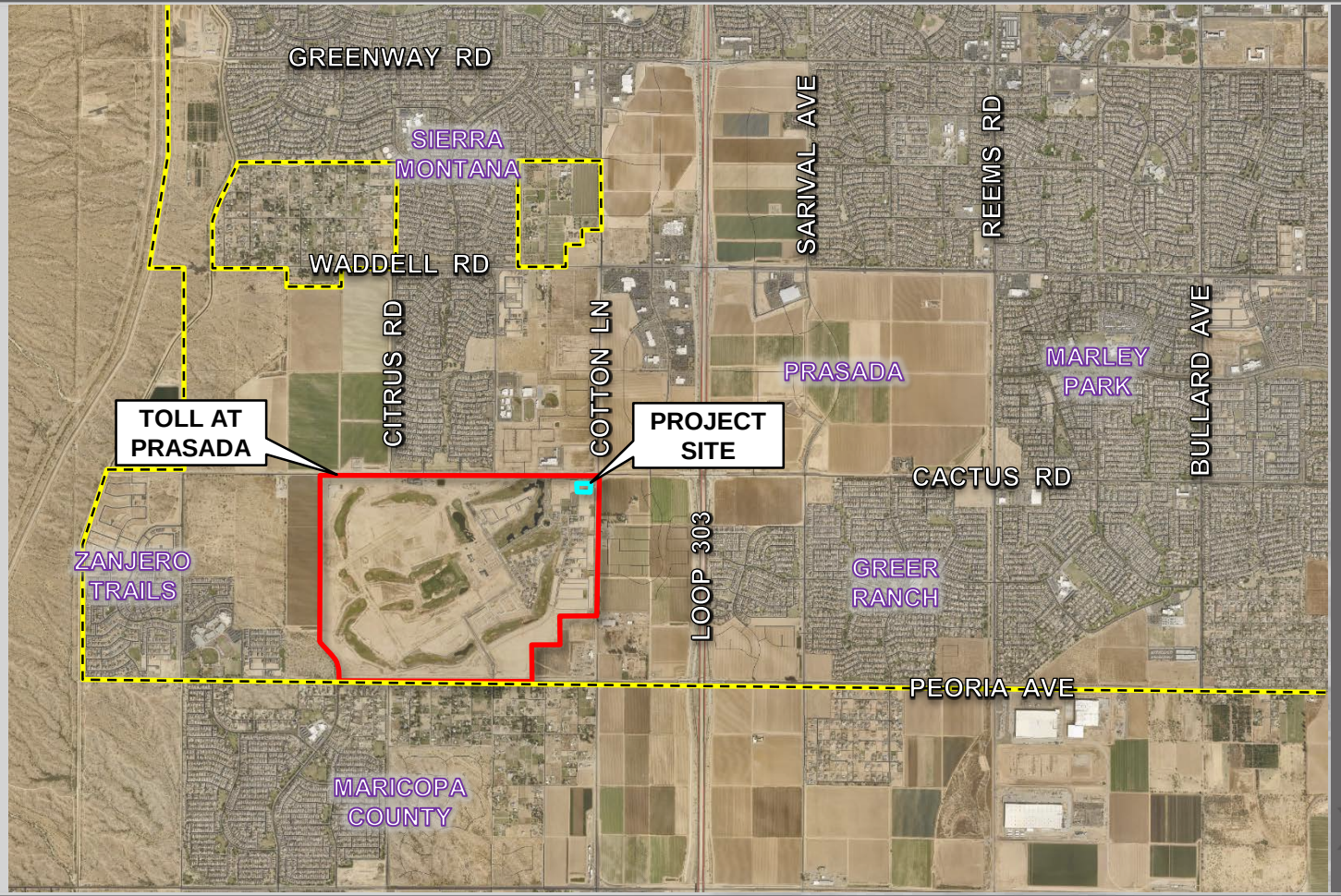

FS22-1181 VICINITY MAP

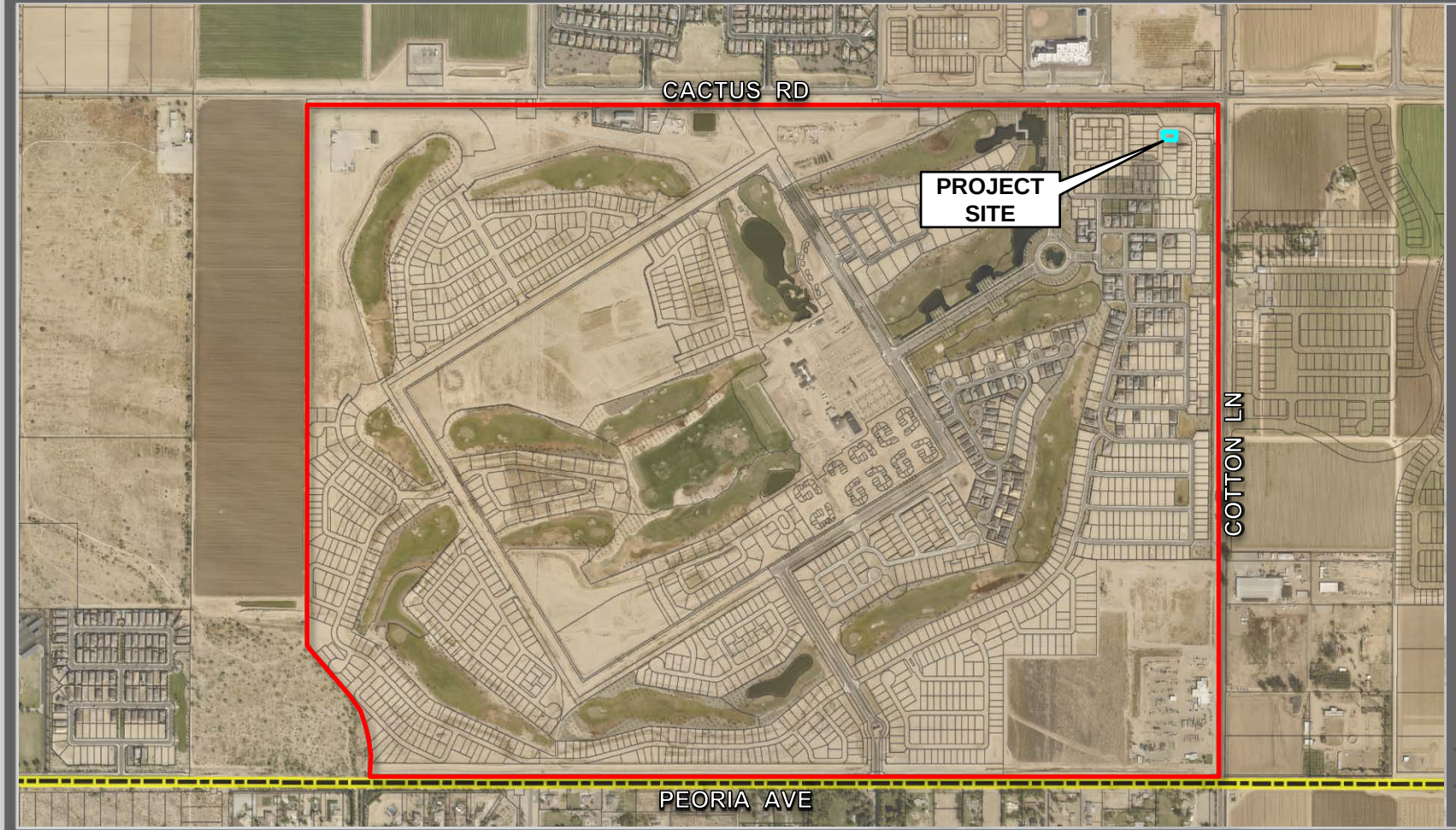

FS22-1181 CASE MAP

Final Plat

Toll at Prasada, Phase I Unit A

Lot 409 & Tract A

BEING A REPLAT OF LOT 409 OF THE FINAL PLAT OF "TOLL AT PRASADA, PHASE I UNIT A", AS RECORDED IN BOOK 1444 OF MAPS, PAGE 3, M.C.R., SITUATED IN A PORTION OF THE NORTHEAST QUARTER OF SECTION 23, TOWNSHIP 3 NORTH, RANGE 2 WEST OF THE GILA AND SALT RIVER MERIDIAN, MARICOPA COUNTY, ARIZONA

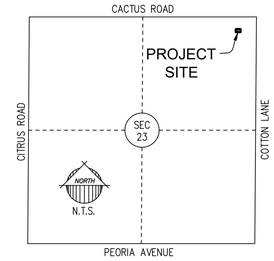

VICINITY MAP

DEDICATION

STATE OF ARIZONA }
} SS
COUNTY OF MARICOPA }

KNOW ALL PERSONS BY THESE PRESENTS: THAT TOLL PRASADA LLC, AN ARIZONA LIMITED LIABILITY COMPANY, "OWNER", HAS SUBDIVIDED UNDER THE NAME TOLL AT PRASADA, PHASE 1 UNIT A LOT 409 & TRACT A, BEING A REPLAT OF LOT 409 OF THE FINAL PLAT OF "TOLL AT PRASADA, PHASE I UNIT A", AS RECORDED IN BOOK 1444 OF MAPS, PAGE 3, M.C.R., SITUATED IN A PORTION OF THE NORTHEAST QUARTER OF SECTION 23, TOWNSHIP 3 NORTH, RANGE 2 WEST OF THE GILA AND SALT RIVER MERIDIAN, MARICOPA COUNTY, ARIZONA, BEING A SUBDIVISION LOCATED IN A PORTION OF THE NORTHEAST QUARTER OF SECTION 23, TOWNSHIP 3 NORTH, RANGE 2 WEST OF THE GILA AND SALT RIVER MERIDIAN, MARICOPA COUNTY, ARIZONA, AS SHOWN AND RE-PLATTED HEREON AND DOES HEREBY PUBLISH THIS RE-PLAT AS AND FOR THE RE-PLAT OF TOLL AT PRASADA, PHASE 1 UNIT A LOT 409 & TRACT A AND DECLARES THAT THIS RE-PLAT SETS FORTH THE LOCATION AND GIVES THE DIMENSIONS OF EACH LOT, TRACT, STREET AND EASEMENT CONSTITUTING THE SAME, AND THAT EACH LOT, TRACT, STREET AND EASEMENT SHALL BE KNOWN BY THE NUMBER, LETTER, AND/OR AND NAME GIVEN TO EACH RESPECTIVELY AS SHOWN ON THIS RE-PLAT.

OWNER HEREBY GRANTS TO THE CITY OF SURPRISE A PERPETUAL EASEMENT ACROSS THE PLAT INCLUDING ROADS AND STREETS, OPEN SPACES, COMMUNITY FACILITIES, TRACTS, SIDEWALKS, DRAINAGE BASINS, AND ANY PROPERTY WITHIN THE PLAT OWNED BY THE HOMEOWNERS ASSOCIATION FOR THE PURPOSE OF PROVIDING CONTINUOUS AND UNINTERRUPTED INGRESS AND EGRESS FOR TRASH COLLECTION VEHICLES.

OWNER HEREBY GRANTS TO THE CITY OF SURPRISE A PERPETUAL CROSS ACCESS EASEMENT ACROSS THE PLAT INCLUDING ROADS AND STREETS, OPEN SPACES, COMMUNITY FACILITIES, TRACTS, SIDEWALKS, DRAINAGE BASINS, AND ANY PROPERTY WITHIN THE PLAT OWNED BY THE HOMEOWNERS ASSOCIATION FOR THE PURPOSE OF PROVIDING CONTINUOUS AND UNINTERRUPTED INGRESS AND EGRESS FOR EMERGENCY VEHICLES.

OWNER HEREBY GRANTS TO THE PUBLIC A PERPETUAL NON-EXCLUSIVE EASEMENT IN, UPON, OVER, UNDER, THROUGH, AND ACROSS THE AREAS DESIGNATED AS PUBLIC UTILITY EASEMENTS AS SHOWN ON THE PLAT FOR THE PURPOSE OF ACCESSING, INSTALLING, CONSTRUCTING, MAINTAINING, REPAIRING, REPLACING, AND UTILIZING PUBLIC UTILITIES.

OWNER HEREBY GRANTS TO THE CITY OF SURPRISE A PERPETUAL NON-EXCLUSIVE EASEMENT OVER, UPON, AND ACROSS THE AREAS DESIGNATED AS SIGHT VISIBILITY TRIANGLES FOR THE PURPOSE OF ENSURING THAT THESE AREAS REMAIN FREE OF SIGHT VISIBILITY OBSTRUCTIONS.

OWNER HEREBY GRANTS TO THE UNITED STATES OF AMERICA DEPARTMENT OF THE AIR FORCE ("USAF") AN AVIGATION EASEMENT OVER AND ACROSS THIS PLAT AND EVERY LOT AND PARCEL THEREOF, WHICH EASEMENT SHALL INCLUDE, BUT NOT BE LIMITED TO, THE RIGHT OF FLIGHT OF AIRCRAFT OVER THIS PLAT, TOGETHER WITH ITS ATTENDANT NOISE, VIBRATIONS, FUMES, DUST, FUEL AND LUBRICANT PARTICLES, AND ALL OTHER EFFECTS THAT MAY BE CAUSED BY THE OPERATION OF AIRCRAFT LANDING AT, OR TAKING OFF FROM, OR OPERATING AT OR ON LUKE AIR FORCE BASE AND AUXILIARY FIELD.

THE EASEMENTS GRANTED WITHIN THIS DEDICATION ARE PERMANENT AND PERPETUAL AND SHALL RUN WITH THE LAND AND BE BINDING UPON OWNER AND ITS HEIRS, ASSIGNS, AND SUCCESSORS IN INTEREST TO THIS PLAT OR ANY PARCEL OR LOT THEREOF.

ALL IMPROVEMENTS, FOR STREETS AND PUBLIC UTILITIES OWNED AND OPERATED BY THE CITY, INSTALLED OR CONSTRUCTED BY OWNER WITHIN THE PUBLIC RIGHTS-OF-WAY, THE EASEMENTS, OR ANY TRACTS OR PARCELS HEREBY DEDICATED TO THE CITY OF SURPRISE SHALL BE DEEMED TO HAVE BEEN DEDICATED BY OWNER TO THE CITY UPON THEIR COMPLETION; HOWEVER, SUCH TRANSFER SHALL NOT OCCUR UNTIL THE CITY COUNCIL FOR THE CITY OF SURPRISE MANIFESTS ITS ACCEPTANCE BY SEPARATE FORMAL COUNCIL ACTION.

TRACT "A" IS NOT DEDICATED TO THE PUBLIC, BUT ARE PLATTED AS COMMON PROPERTY FOR THE USE AND ENJOYMENT OF THE HOMEOWNERS ASSOCIATION, AS MORE FULLY SET FORTH IN THE DECLARATION OF COVENANTS, CONDITIONS, AND RESTRICTIONS. SAID HOMEOWNERS ASSOCIATION IS RESPONSIBLE FOR MAINTAINING SAID TRACTS.

IN WITNESS WHEREOF, OWNER HAS HEREUNTO CAUSED ITS CORPORATE NAME TO BE SIGNED AND ITS CORPORATE SEAL TO BE AFFIXED BY THE UNDERSIGNED, DULY AUTHORIZED OFFICER THIS _____ DAY OF _____, 20__.

TOLL PRASADA LLC, AN ARIZONA LIMITED LIABILITY COMPANY

BY _____ DATE _____

ITS _____

ACKNOWLEDGMENT

STATE OF ARIZONA }
} SS
COUNTY OF MARICOPA }

ON THIS _____ DAY OF _____, 20__ BEFORE ME, THE UNDERSIGNED, PERSONALLY APPEARED _____, WHO ACKNOWLEDGED HIMSELF TO BE THE PERSON WHOSE NAME IS SUBSCRIBED TO THE INSTRUMENT WITHIN, AND WHO EXECUTED THE FOREGOING INSTRUMENT FOR THE PURPOSES THEREIN CONTAINED.

IN WITNESS WHEREOF, I HAVE HEREUNTO SET MY HAND AND OFFICIAL SEAL.

_____
NOTARY PUBLIC DATE

_____
MY COMMISSION EXPIRES:

NOTICE OF PRASADA PRE-ANNEXATION DEVELOPMENT AGREEMENT

OWNER'S PREDECESSOR, SUBURBAN LAND RESERVE, INC., A UTAH CORPORATION, FULTON HOMES CORPORATION, AN ARIZONA CORPORATION, AND WESTCOR/SURPRISE LLC, AN ARIZONA LIMITED LIABILITY COMPANY HAVE ENTERED INTO A PRE-ANNEXATION1 DEVELOPMENT AGREEMENT DATED SEPTEMBER 12, 2006 ("AGREEMENT") WITH CITY OF SURPRISE, AN ARIZONA MUNICIPAL CORPORATION, FOR WHICH A MEMORANDUM OF AGREEMENT WAS RECORDED ON SEPTEMBER 19, 2066, AT THE MARICOPA COUNTY RECORDER'S OFFICE AT DOCUMENT NO. 20061238109. AGREEMENT WAS RECENTLY AMENDED AND RECORDED ON JULY 20, 2018, AT THE MARICOPA COUNTY RECORDER'S OFFICE DOCUMENT NO. 20180551464. THE PROPERTIES INVOLVED IN THIS PLAT ARE SUBJECT TO THIS AGREEMENT.

NOTICE OF INTERGOVERNMENTAL AGREEMENT

THE CITY OF SURPRISE ("CITY") AND MARICOPA COUNTY MUNICIPAL WATER CONSERVATION DISTRICT NUMBER ONE ("MWD") ENTERED INTO AN INTERGOVERNMENTAL AGREEMENT DATED APRIL 8, 1997, AND RECORDED IN THE MARICOPA COUNTY RECORDER'S OFFICE ON APRIL 9, 1997, UNDER DOCKET NO. 97-0231759 ("IGA"). CITY AND MWD HAVE FACILITIES AND PROPERTY INTERESTS DESCRIBED AND DELINEATED WITHIN CERTAIN SUBDIVISION PLATS OR, FOR LANDS NOT INCLUDED IN A SUBDIVISION PLAT, DECLARATIONS OF TURF LANDS OR DECLARATIONS OF URBANIZED AREA, THAT HAVE PRIOR AND SUPERIOR RIGHTS TO THE UTILITY SERVICE PROVIDERS, AS DEFINED IN THE IGA. THE IGA PROVIDES FOR THE CITY TO HAVE A PUBLIC UTILITY EASEMENT WITHIN CERTAIN MWD PROPERTY INTERESTS AND FOR MWD TO HAVE AN EASEMENT WITHIN CITY'S PUBLIC RIGHTS-OF-WAY. CITY AND MWD RIGHTS WITHIN THESE EASEMENTS ARE SUBJECT TO AND CONTROLLED BY THE TERMS AND CONDITIONS OF THE IGA

IN LOCATIONS WHERE APPLICABLE, INCLUDING ANY AND ALL DEDICATIONS WITHIN A SUBDIVISION PLAT, MWD'S PRIOR AND SUPERIOR RIGHTS OF ACCESS TO AND USE OF EXISTING AND FUTURE MWD FACILITIES AND PROPERTY INTERESTS, SHALL BE SUBJECT TO THE TERMS AND CONDITIONS OF THE IGA.

CITY SHALL HAVE THE RIGHT TO AUTHORIZE AND CONTROL THE UTILITY SERVICE PROVIDER'S USE AND OCCUPANCY OF THESE EASEMENTS. CITY REQUIRES THAT UTILITY SERVICE PROVIDERS CONSENT TO BE BOUND BY THE IGA PRIOR TO THE USE OR OCCUPANCY OF THE EASEMENTS GRANTED UNDER THE IGA. SUCH USE OR OCCUPANCY OF THE EASEMENTS CONSTITUTES CONSENT OF THE UTILITY SERVICE PROVIDERS TO BE BOUND BY THE IGA.

PUBLIC NOTICE

THE LOTS DEPICTED ON THIS PLAT ARE LOCATED WITHIN THE VICINITY OF LUKE AIR FORCE BASE AND MAY BE SUBJECT TO OVERFLIGHTS BY JET AIRCRAFT. ALL STRUCTURES WITHIN THIS PLAT SHALL BE CONSTRUCTED IN COMPLIANCE WITH THE SOUND ATTENUATION STANDARDS ADOPTED BY THE CITY OF SURPRISE. A MAP DEPICTING THE MOST CURRENT ADOPTED MAG NOISE CONTOURS IN RELATION TO THIS PLAT SHALL BE DISPLAYED IN ALL SALES OFFICES. ADDITIONAL INFORMATION MAY BE OBTAINED BY CONTACTING THE CITY OF SURPRISE COMMUNITY DEVELOPMENT DEPARTMENT.

RELEASE OF LIABILITY

TOLL PRASADA LLC, AN ARIZONA LIMITED LIABILITY COMPANY ("OWNER") DOES HEREBY (1) RELEASE AND DISCHARGE THE UNITED STATES OF AMERICA DEPARTMENT OF THE AIR FORCE (USAF) AND THE CITY OF SURPRISE, AND (2) INDEMNIFY, DEFEND, AND HOLD HARMLESS THE USAF AND THE CITY OF SURPRISE, OF AND FROM ANY LIABILITY FOR ANY AND ALL CLAIMS FOR DAMAGES OF ANY KIND TO PERSONS OR PROPERTY THAT MAY ARISE AT ANY TIME IN THE FUTURE OVER, OR IN CONNECTION WITH AIRCRAFT OVERFLIGHTS FROM AIRCRAFT UTILIZING LUKE AIR FORCE BASE, WHETHER SUCH DAMAGE SHALL ORIGINATE FROM NOISE, VIBRATION, FUMES, DUST, FUEL AND LUBRICANT PARTICLES, AND ALL OTHER EFFECTS THAT MAY BE CAUSED BY THE OPERATION OF AIRCRAFT LANDING AT, OR TAKING OFF FROM, OR OPERATING AT OR ON LUKE AIR FORCE BASE AND ITS AUXILIARY FIELDS. THIS INSTRUMENT SHALL RUN WITH THE LAND AND BE BINDING UPON OWNER AND ITS HEIRS, ASSIGNS, AND SUCCESSORS IN INTEREST TO THIS PLAT OR ANY PARCEL OR LOT THEREOF. THIS INSTRUMENT DOES NOT RELEASE THE USAF FROM LIABILITY FOR DAMAGE OR INJURY TO PERSON OR PROPERTY CAUSED BY FALLING AIRCRAFT OR FALLING PHYSICAL OBJECTS FROM AIRCRAFT, EXCEPT AS STATED HEREIN WITH RESPECT TO NOISE, FUMES, DUST, FUEL, AND LUBRICANT PARTICLES.

EPCOR PLAT DEDICATION

EXCEPT AS TO ANY AREAS SUBJECT TO THE EASEMENT OR EASEMENTS GRANTED TO MARICOPA WATER DISTRICT, AS DEPICTED ON THIS PLAT AND RECORDED IN THE OFFICE OF THE RECORDER, MARICOPA COUNTY, ARIZONA, A PERPETUAL WATER EASEMENT AS DESCRIBED IN THIS PLAT IS GRANTED TO EPCOR WATER ARIZONA INC., AND ITS SUCCESSORS AND ASSIGNS (COLLECTIVELY "GRANTEE"), TO CONSTRUCT, OPERATE, AND MAINTAIN WATER LINES AND APPURTENANT FACILITIES (COLLECTIVELY, "FACILITIES") UPON, ACROSS, OVER AND UNDER THE SURFACE OF THE EASEMENTS, TOGETHER WITH THE RIGHT TO OPERATE, REPAIR, REPLACE, MAINTAIN, AND REMOVE THE FACILITIES FROM THE PREMISES; TO ADD OR TO ALTER THE FACILITIES, AND TO PROVIDE GRANTEE WITH REASONABLE INGRESS AND EGRESS TO THE FACILITIES. GRANTEE WILL HAVE UNRESTRICTED ACCESS TO THE EASEMENT FOR THE ACTIVITIES DESCRIBED ABOVE AND FORMAL NOTIFICATION OR APPROVAL BY ANY ASSOCIATION PRIOR TO ACCESSING THE EASEMENT WILL NOT BE REQUIRED.

GRANTOR SHALL NOT ERECT OR CONSTRUCT OR PERMIT TO BE ERECTED OR CONSTRUCTED ANY BUILDING, STRUCTURE OR SIMILAR IMPROVEMENT WITHIN THE LIMITS OF THE EASEMENT GRANTED HEREIN. GRANTOR SHALL NOT, NOR PERMIT, THE GRADE OVER GRANTEE'S FACILITIES TO BE SUBSTANTIALLY ALTERED WITHOUT, IN EACH INSTANCE, THE PRIOR WRITTEN CONSENT OF GRANTEE, AND GRANTOR AGREES THAT NO OTHER PIPES OR CONDUITS SHALL BE PLACED WITHIN THE PREMISES SUBJECT TO THE EASEMENT GRANTED HEREIN, EXCEPT PIPES CROSSING GRANTEE'S FACILITIES AT RIGHT ANGLES, IN WHICH CASE, A MINIMUM VERTICAL DISTANCE OF TWO (2) FEET (AS MEASURED FROM THE CLOSEST POINTS ON THE OUTSIDE EDGES) SHALL BE MAINTAINED BETWEEN GRANTEE'S FACILITIES AND SUCH OTHER PIPES OR CONDUITS. UNLESS GRANTEE EXPRESSLY CONSENTS IN WRITING OTHERWISE, ANY AND ALL SEWER PIPES CROSSING THE EASEMENT GRANTED HEREIN SHALL BE LAID BELOW GRANTEE'S FACILITIES. HOWEVER, GRANTOR SHALL HAVE THE RIGHT TO CONSTRUCT AND ERECT FENCES, TO INSTALL LANDSCAPING, PARKING FACILITIES AND DRIVEWAYS, AND TO ESTABLISH OTHER USES THAT ARE NOT INCONSISTENT WITH USES WITHIN THE LIMITS OF SAID EASEMENT IN A MANNER THAT WILL NOT UNREASONABLY INTERFERE WITH GRANTEE'S ACCESS TO THE FACILITIES.

LEGAL DESCRIPTION

SEE SHEET 2.

GENERAL NOTES

1. SPRINKLERS ARE REQUIRED IN ALL ONE AND TWO FAMILY DWELLINGS BUILT IN AREAS WHICH DO NOT HAVE AN ADEQUATE WATER SUPPLY.
2. NO ON-SITE GRADING OR EXCAVATION SHALL OCCUR WITHOUT FIRST OBTAINING A PERMIT FROM THE CITY OF SURPRISE.
3. THE PROPERTY IS LOCATED WITHIN AN AREA HAVING FLOOD ZONE "ZONE X SHADED AND ZONE A," BY THE FEDERAL EMERGENCY MANAGEMENT AGENCY, ON FLOOD INSURANCE RATE MAP NO. 04013C1660L, WITH A DATE OF IDENTIFICATION OF OCTOBER 16, 2013, FOR COMMUNITY NO. 040053, IN MARICOPA COUNTY, STATE OF ARIZONA, WHICH IS THE CURRENT FLOOD INSURANCE RATE MAP FOR THE COMMUNITY IN WHICH SAID PROPERTY IS SITUATED.
4. THE ROADS DESIGNATED AS "PRIVATE" AND ANY APPURTENANCES INCLUDING BUT NOT LIMITED TO ROAD SIGNS, STRIPING, CURB AND GUTTER, AND SIDEWALKS ARE PRIVATE; SUCH ROADS AND APPURTENANCES ARE OWNED, MAINTAINED AND REPAIRED BY OWNER OR THE HOMEOWNER'S ASSOCIATION FORMED BY OWNER. THE CITY OF SURPRISE SHALL NOT MAINTAIN OR REPAIR ANY ROAD DESIGNATED AS "PRIVATE."
5. IN ACCORDANCE WITH ARS § 9-461.07, THE CITY OF SURPRISE HAS DETERMINED THAT ALL DEDICATIONS OCCURRING WITH THIS PLAT ARE IN CONFORMANCE WITH THE SURPRISE GENERAL PLAN.
6. PURSUANT TO A.R.S. § 42-11102, THE CITY OF SURPRISE, A POLITICAL SUBDIVISION OF THE STATE OF ARIZONA, IS EXEMPT FROM ALL TAXES AND ASSESSMENTS BASED ON ASSESSED VALUE EXCEPT FOR SPECIAL DISTRICTS #14751 AND 14710, WHEN APPLICABLE.
7. THE MAINTENANCE OF LANDSCAPING WITHIN THE OPEN SPACES, LANDSCAPED TRACTS, RETENTION BASINS AND PARKS SHALL BE THE RESPONSIBILITY OF THE OWNER OR THE ASSOCIATION FORMED BY THE OWNER.
8. THE MAINTENANCE OF LANDSCAPING WITHIN THE ADJACENT PUBLIC RIGHTS-OF-WAY, INCLUDING LANDSCAPED MEDIANS WITHIN COLLECTORS AND LOCAL STREETS AND LANDSCAPED AREAS BETWEEN THE CURB AND THE DETACHED SIDEWALK, SHALL BE THE RESPONSIBILITY OF THE ADJACENT PROPERTY OWNER OR THE PROPERTY ASSOCIATION FORMED BY THE ADJACENT PROPERTY.
9. ZONING OF THE PROPERTY IS PER SURPRISE ZONING CASE FS17-587 OR AS SUBSEQUENTLY AMENDED.
10. THIS FINAL PLAT IS IN SUBSTANTIAL CONFORMANCE WITH THE PRELIMINARY PLAT AS APPROVED UNDER CITY OF SURPRISE CASE FS17-394.

AREA SUMMARY TABLE

DESCRIPTION	AREA (SF)	AREA (ACRES)
LOT 409 (1 LOT)	6,805	0.1562
TRACT A	810	0.0186
PRIVATE STREETS	0	0
GROSS AREA	7,616	0.1748

100 YEAR ASSURED WATER SUPPLY

THE SUBDIVIDER HAS OBTAINED A CERTIFICATE OF 100 YEAR ASSURED WATER SUPPLY FROM THE DEPARTMENT OF WATER RESOURCES.

27-701007.0000 — CERTIFICATE NUMBER
11/14/2018 — DATE

BASIS OF BEARING

THE EAST LINE OF THE NORTHEAST QUARTER OF SECTION 22, TOWNSHIP 2 NORTH, RANGE 2 WEST OF THE GILA AND SALT RIVER MERIDIAN, BEING SOUTH 00°24'11" WEST AS MEASURED AND BEING SOUTH 00°22'35" WEST SHOWN ON MARICOPA COUNTY GDACS SURVEY RECORDED IN BOOK 661, PAGE 16, MARICOPA COUNTY RECORDS.

NOTICE OF TOLL AT PRASADA DEVELOPMENT AND WATER DELIVERY AGREEMENT

LANDOWNER ENTERED INTO THE TOLL AT PRASADA DEVELOPMENT AND WATER DELIVERY AGREEMENT DATED JANUARY 2, 2019 ("AGREEMENT") WITH MARICOPA COUNTY MUNICIPAL WATER CONSERVATION DISTRICT NUMBER ONE ("MWD") FOR WHICH A MEMORANDUM OF AGREEMENT WAS RECORDED ON JANUARY 3, 2019, AT THE MARICOPA COUNTY RECORDERS' OFFICE AT 2019-0002436. THE PROPERTIES INVOLVED IN THIS PLAT ARE SUBJECT TO THIS AGREEMENT. THE AGREEMENT AND THIS PLAT, INCLUDING ANY AND ALL DEDICATIONS THEREIN, HEREBY PRESERVE MWD'S PRIOR AND SUPERIOR RIGHTS OF ACCESS TO AND USE OF EXISTING AND FUTURE MWD FACILITIES AND MWD PROPERTY INTERESTS, AS SUCH TERMS ARE DEFINED IN THE AGREEMENT, TO ENABLE MWD TO ACCOMPLISH ALL OF MWD'S PURPOSES, INCLUDING, BUT NOT LIMITED TO, THE TRANSMISSION AND DISTRIBUTION OF WATER, WASTEWATER, POWER AND COMMUNICATIONS, AND TO CONSTRUCT, RECONSTRUCT, OPERATE, MAINTAIN AND REPLACE THOSE MWD FACILITIES AND MWD PROPERTY INTERESTS. THE AGREEMENT IS ON FILE AT THE OFFICES OF TOLL PRASADA LLC, AND MAY BE REVIEWED AS TO ALL DETAILS, WITH PARTICULAR REFERENCE TO SECTION 7 AND SECTION 9, UPON REASONABLE REQUEST.

DATED THIS _____ DAY OF _____, 20__.

MARICOPA COUNTY MUNICIPAL WATER CONSERVATION DISTRICT NUMBER ONE, A POLITICAL SUBDIVISION OF THE STATE OF ARIZONA

BY: _____ CHRISTINE CAIN
ITS: PROPERTY & CONTRACTS MANAGER

ATTEST:
BY: _____ GLEN VORTHERMS
ITS: ASSISTANT SECRETARY

TOLL PRASADA LLC, AN ARIZONA LIMITED LIABILITY COMPANY

BY: _____

ITS: _____

ENGINEER

EPS GROUP, INC.
1130 N. ALMA SCHOOL ROAD, STE. 120
MESA, ARIZONA 85201
TEL: (480)-503-2250
FAX: (480)-503-2258
CONTACT: JAMES ROGERS, P.E.

OWNER/DEVELOPER

TOLL BROTHERS
8767 E VIA DE VENTURA, SUITE 390
SCOTTSDALE, AZ 85258
TEL: (602) 999-5684
CONTACT: AARON INSCO

SHEET INDEX

1 COVER SHEET
2 LOT AREA TABLE, TRACT AREA & USAGE TABLE, CURVE TABLE, LINE TABLE & FINAL RE-PLAT PLAN SHEET

HOMEOWNERS ASSOCIATION RATIFICATION

KNOW ALL MEN BY THESE PRESENTS: THAT STERLING GROVE COMMUNITY ASSOCIATION, INC., AN ARIZONA NONPROFIT CORPORATION, HEREBY RATIFIES, AFFIRMS AND APPROVES THIS PLAT FOR "PHASE 1 UNIT A LOT 409 & TRACT A" AND THE RESPONSIBILITIES IMPOSED UPON IT UNDER THIS PLAT.

IN WITNESS WHEREOF, STERLING GROVE COMMUNITY ASSOCIATION, INC. HAS CAUSED ITS NAME TO BE AFFIXED BY THE UNDERSIGNED, DULY AUTHORIZED OFFICER THIS _____ DAY OF_____, 20__.

STERLING GROVE COMMUNITY ASSOCIATION, INC.,
AN ARIZONA NON-PROFIT CORPORATION

BY: _____

ITS: _____

ACKNOWLEDGMENT

STATE OF ARIZONA }
} SS
COUNTY OF MARICOPA }

ON THIS _____ DAY OF _____, 20__ BEFORE ME, THE UNDERSIGNED, PERSONALLY APPEARED _____, WHO ACKNOWLEDGED HIMSELF TO BE THE PERSON WHOSE NAME IS SUBSCRIBED TO THE INSTRUMENT WITHIN, AND WHO EXECUTED THE FOREGOING INSTRUMENT FOR THE PURPOSES THEREIN CONTAINED.

IN WITNESS WHEREOF, I HAVE HEREUNTO SET MY HAND AND OFFICIAL SEAL.

_____
NOTARY PUBLIC DATE

_____
MY COMMISSION EXPIRES:

CITY OF SURPRISE ENGINEER APPROVAL

DATA ON THIS PLAT REVIEWED AND APPROVED THIS _____ DAY OF _____, 20__, BY THE CITY ENGINEER OF SURPRISE, ARIZONA.

APPROVED _____ _____
CITY ENGINEER DATE

CITY OF SURPRISE COUNCIL APPROVAL

APPROVED BY THE CITY COUNCIL OF THE CITY OF SURPRISE, ARIZONA, THIS _____ DAY OF _____, 20__.

_____ _____
MAYOR DATE

ATTEST: _____ _____
CITY CLERK DATE

CERTIFICATION

I, ROBERT A. JOHNSTON, HEREBY CERTIFY THAT I AM A REGISTERED LAND SURVEYOR IN THE STATE OF ARIZONA; THAT THIS PLAT CORRECTLY REPRESENTS A SURVEY MADE UNDER MY DIRECTION DURING THE MONTH OF AUGUST, 2022; THAT THE SURVEY IS TRUE AND CORRECT AS SHOWN; THAT ALL MONUMENTS ACTUALLY EXIST OR WILL BE SET AS SHOWN; THAT SAID MONUMENTS ARE SUFFICIENT TO ENABLE THE SURVEY TO BE RETRACED.

ROBERT A. JOHNSTON, RLS 37495
EPS GROUP, INC.
1130 N. ALMA SCHOOL ROAD, STE. 120
MESA, ARIZONA 85201
PHONE: (480) 503-2250
FAX: (480) 503-2258

DATE OF PREPARATION: 08/11/22 (REVISED OCTOBER 24, 2022)

CASE NUMBER: FS22-1181

EPS GROUP
1130 N. Alma School Rd., Ste. 120
Mesa, Az 85201
T:480.503.2250 I F:480.503.2258
www.epsgroupinc.com

Toll at Prasada, Phase I Unit A
Lot 409 & Tract A Re-plat
SURPRISE, ARIZONA

Project: Final Plat

Revisions:

Designer: RAJ
Drawn by: TJP

REGISTERED LAND SURVEYOR
CERTIFICATE NO.
37495
ROBERT A.
JOHNSTON
Date Signed 8-11-22

Job No.
16-339
FP01

Sheet No.
1
of 2

S:\Projects\2016\16-339\Legal Survey\Dwgs\Final Plats\Unit A Lot 409 & Tract A Re-plat\16-339 - UNIT A Lot 409 & Tract A Re-plat.dwg
tprotonentis Oct 24, 2022 2:56pm

LEGAL DESCRIPTION

A PORTION OF THE NORTHEAST QUARTER OF SECTION 23, TOWNSHIP 3 NORTH, RANGE 2 WEST OF THE GILA AND SALT RIVER MERIDIAN, MARICOPA COUNTY, ARIZONA, MORE PARTICULARLY DESCRIBED AS FOLLOWS:

COMMENCING AT A BRASS CAP FLUSH AT THE NORTHEAST CORNER OF SAID SECTION 23, FROM WHICH A MCDOT BRASS CAP IN HANDHOLE AT THE EAST QUARTER-CORNER BEARS SOUTH 0 DEGREES 24 MINUTES 11 SECONDS WEST, 2640.04 FEET;

THENCE ALONG THE EAST LINE OF SAID NORTHEAST QUARTER, SOUTH 0 DEGREES 24 MINUTES 11 SECONDS WEST, 286.57 FEET TO A POINT ON SAID EAST LINE;

THENCE, DEPARTING SAID EAST LINE NORTH 89 DEGREES 35 MINUTES 49 SECONDS WEST, 368.00 FEET TO THE POINT OF BEGINNING;

THENCE SOUTH 0 DEGREES 24 MINUTES 11 SECONDS WEST, 70.00 FEET;

THENCE NORTH 89 DEGREES 59 MINUTES 46 SECONDS WEST, 110.00 FEET;

THENCE NORTH 0 DEGREES 24 MINUTES 11 SECONDS EAST, 50.14 FEET TO THE BEGINNING OF A CURVE, CONCAVE SOUTHEAST, HAVING A RADIUS OF 20.00 FEET;

THENCE NORTHEASTERLY 31.28 FEET ALONG THE ARC OF SAID CURVE TO THE RIGHT THROUGH A CENTRAL ANGLE OF 89 DEGREES 36 MINUTES 03 SECONDS;

THENCE SOUTH 89 DEGREES 59 MINUTES 46 SECONDS EAST, 90.14 FEET TO THE POINT OF BEGINNING.

CONTAINS 0.1748 ACRES, MORE OR LESS.

LOT AREA TABLE			
LOT #	AREA (SF)	AREA (AC)	CATEGORY
409	6,805	0.1562	C

CURVE TABLE						
CURVE	LENGTH	RADIUS	DELTA	TANGENT	CHORD	CHORD BRG
C1	189.33'	120.00'	90°23'57"	120.84'	170.30'	N44°47'47"W
C2	31.28'	20.00'	89°36'03"	19.86'	28.19'	S45°12'13"W

LINE TABLE		
LINE	BEARING	LENGTH
L1	S00°00'14"W	20.00'
L2	S00°00'14"W	20.00'
L3	N89°59'46"W	20.00'
L4	S89°59'46"E	20.00'
L5	N00°24'11"E	50.14'

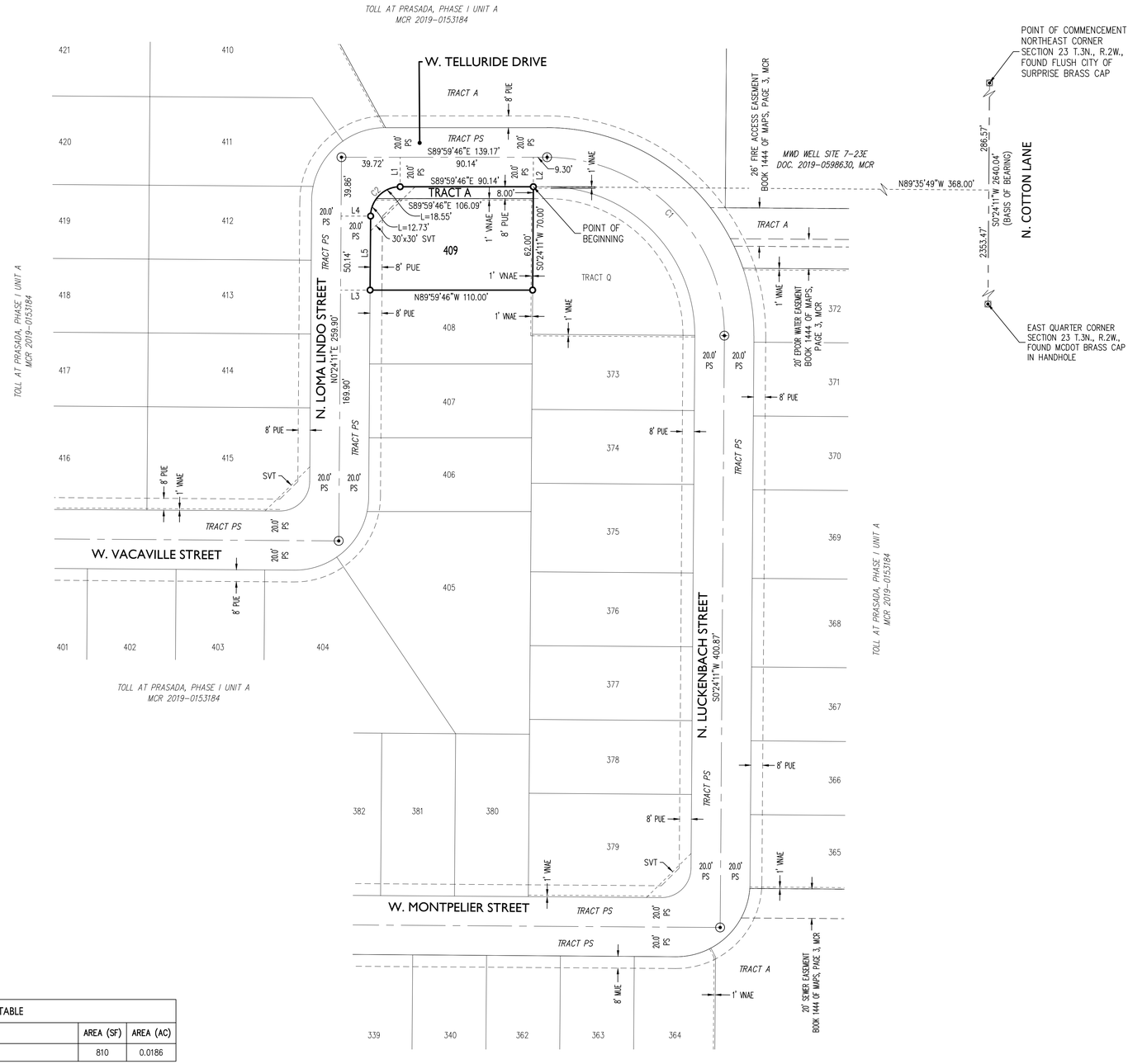

TRACT USE TABLE			
TRACT	USE	AREA (SF)	AREA (AC)
A	HOA & **PUBLIC UTILITIY EASEMENT	810	0.0186

LEGEND

▣	FOUND MONUMENT, AS NOTED
o	CORNER OF SUBDIVISION
⊙	BRASS CAP TO BE SET AT CONSTRUCTION
R/W	RIGHT-OF-WAY
M.C.R.	MARICOPA COUNTY RECORDER
PS	PRIVATE STREET
SVT	SIGHT VISIBILITY TRIANGLE EASEMENT
PUE	PUBLIC UTILITY EASEMENT
(1401)	INDICATES STARTING AND ENDING LOT NUMBERING

NOTES

1. COMMON AREAS MAY INCLUDE OPEN SPACE, LANDSCAPING, PEDESTRIAN PATHS, AND/OR AMENITIES.
2. SPECIFIC EASEMENTS THAT ARE BEING DEDICATED AS PART OF THIS PLAT ARE FULLY DELINEATED ON THE FOLLOWING SHEETS.
3. ** THE EASEMENTS LISTED ABOVE (SHOWN WITH AN ASTERIK **) ONLY AFFECT A PORTION OF THE TRACT WITH WHICH THEY ARE LISTED, AND ARE FULLY DELINEATED WITHIN THE PLAT. OTHER "USES" LISTED ABOVE ARE COMMON AREA.

NORTH

40 0 40 80
scale feet

CASE NUMBER: FS22-1181

EPS GROUP
1130 N. Alma School Rd., Ste. 120
Mesa, AZ 85201
T:480.503.2250 | F:480.503.2258
w w w . e p s g r o u p i n c . c o m

Project: Toll at Prasada, Phase I Unit A
Lot 409 & Tract A Re-plat
SURPRISE, ARIZONA

Final Plat

Revisions:

Designer: RAJ
Drawn by: TJP

REGISTERED LAND SURVEYOR
CERTIFICATE NO.
37495
ROBERT A.
JOHNSTON
Date Signed 10-24-22

Job No.
16-339
FP02
Sheet No.
2
of 2

tprotonentis Oct 24, 2022 2:55pm S:\Projects\2016\16-339\Legal Survey\Dwgs\Final Plats\Unit A Lot 409 & Tract A Re-plat\16-339 - UNIT A Lot 409 & Tract A Re-plat.dwg

SURPRISE
ARIZONA

FS22-1181
Toll at Prasada Unit A Re-Plat
Final Plat

City Council

January 17, 2023

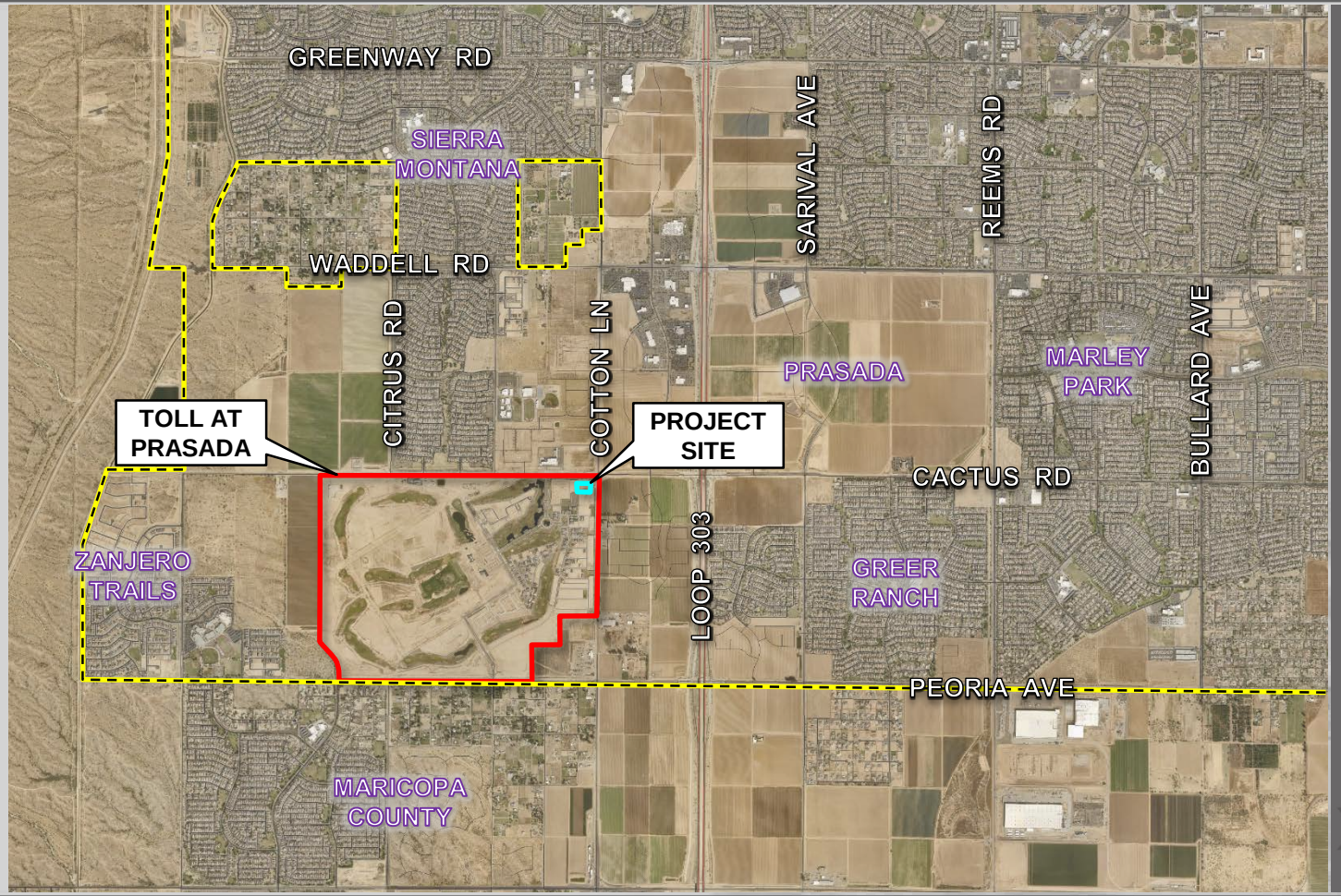

FS22-1181 VICINITY MAP

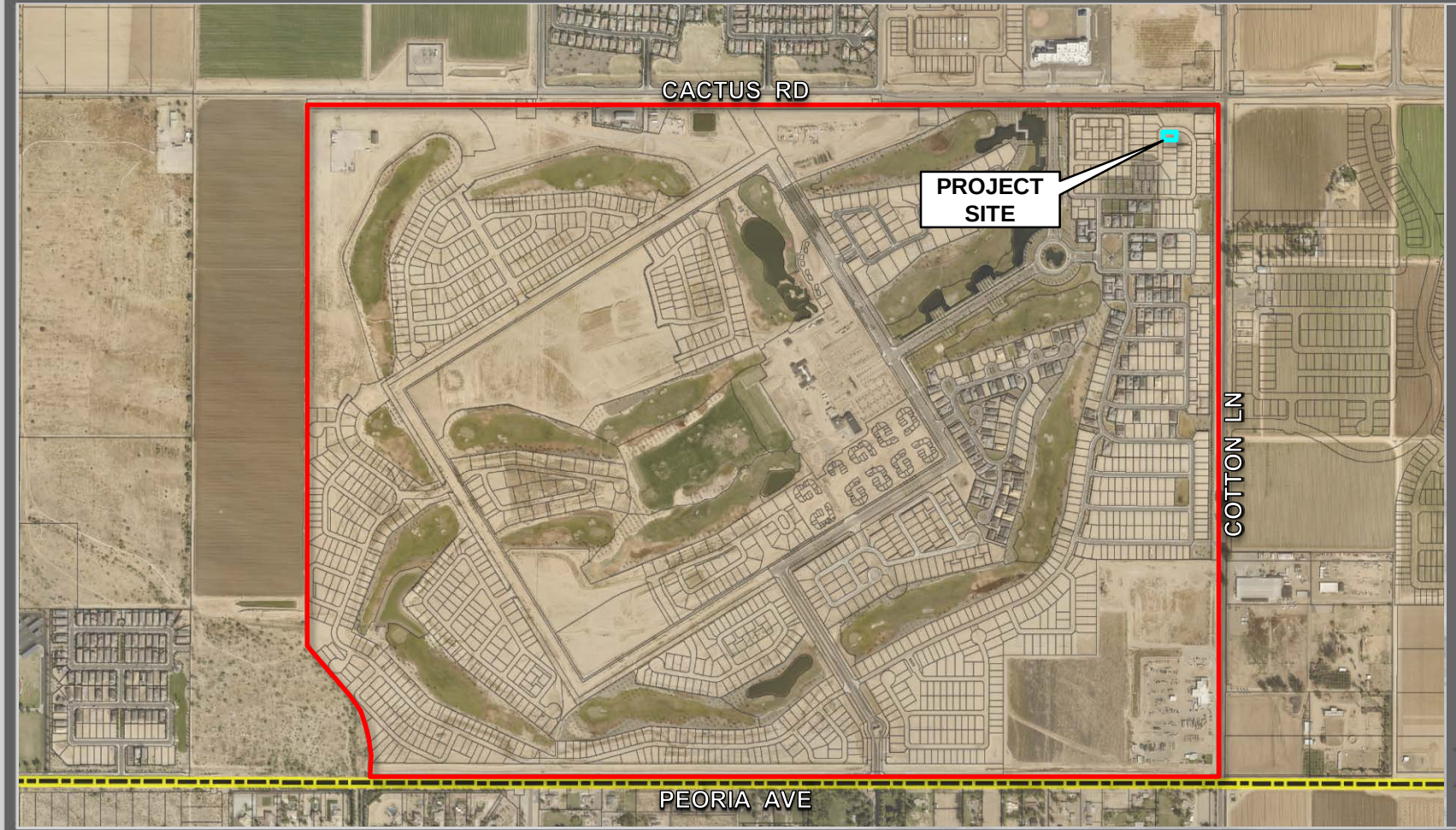

FS22-1181 CASE MAP

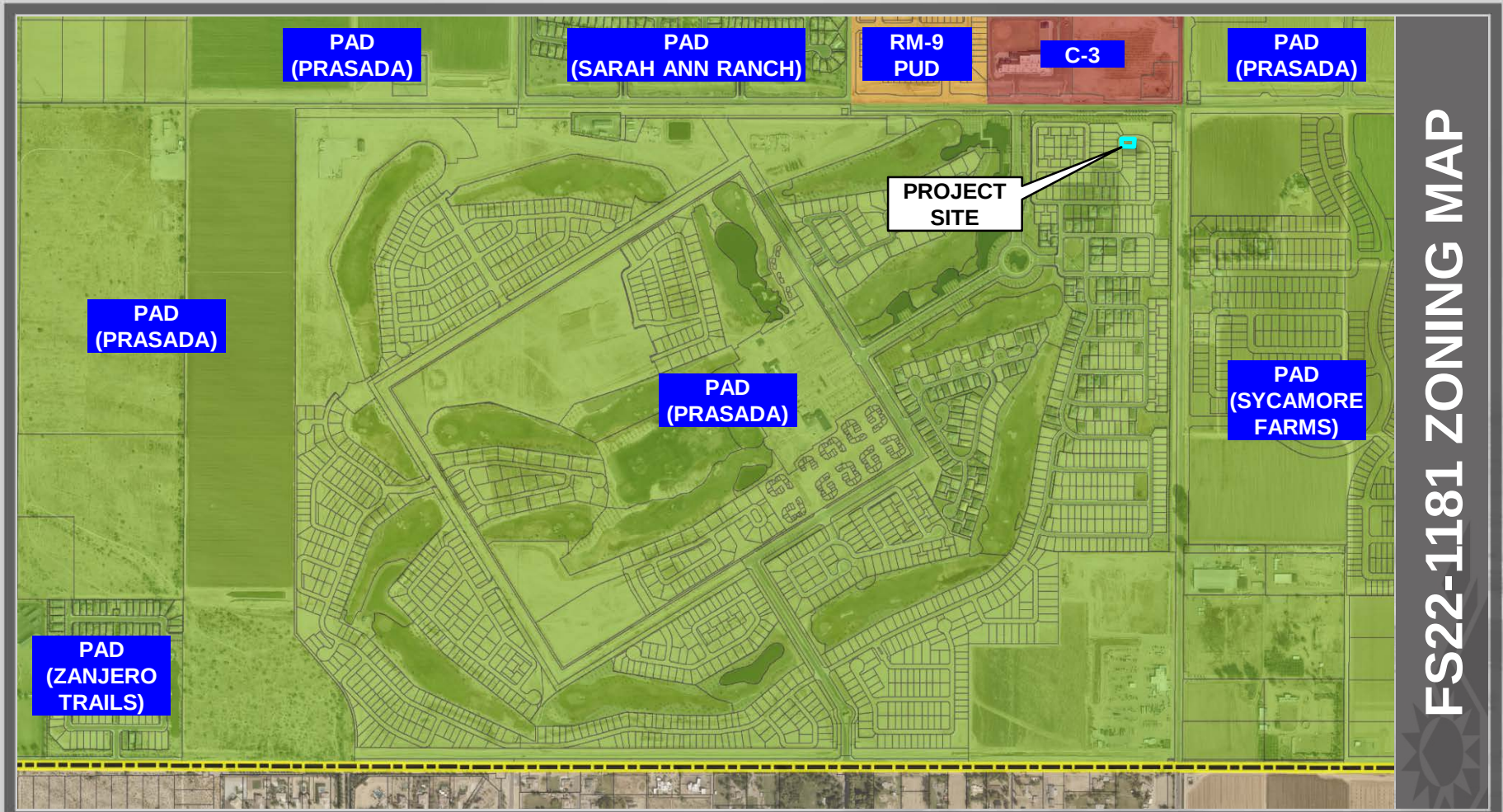
PAD
(PRASADA)
PAD
(SARAH ANN RANCH)
RM-9
PUD
C-3
PAD
(PRASADA)
PROJECT
SITE
PAD
(PRASADA)
PAD
(PRASADA)
PAD
(SYCAMORE
FARMS)
PAD
(ZANJERO
TRAILS)
FS22-1181 ZONING MAP

Sterling Grove Master Plan

FS22-1181 FINAL PLAT

LEGAL DESCRIPTION

A PORTION OF THE NORTHEAST QUARTER OF SECTION 23, TOWNSHIP 3 NORTH, RANGE 2 WEST OF THE GILA AND SALT RIVER MERIDIAN, MARICOPA COUNTY, ARIZONA, MORE PARTICULARLY DESCRIBED AS FOLLOWS:

COMMENCING AT A BRASS CAP FLUSH AT THE NORTHEAST CORNER OF SAID SECTION 23, FROM WHICH A MCDOT BRASS CAP IN HANDHOLE AT THE EAST QUARTER-CORNER BEARS SOUTH 0 DEGREES 24 MINUTES 11 SECONDS WEST, 2640.04 FEET;

THENCE ALONG THE EAST LINE OF SAID NORTHEAST QUARTER, SOUTH 0 DEGREES 24 MINUTES 11 SECONDS WEST, 286.57 FEET TO A POINT ON SAID EAST LINE;

THENCE, DEPARTING SAID EAST LINE NORTH 89 DEGREES 35 MINUTES 49 SECONDS WEST, 368.00 FEET TO THE POINT OF BEGINNING;

THENCE SOUTH 0 DEGREES 24 MINUTES 11 SECONDS WEST, 70.00 FEET;

THENCE NORTH 89 DEGREES 59 MINUTES 46 SECONDS WEST, 110.00 FEET;

THENCE NORTH 0 DEGREES 24 MINUTES 11 SECONDS EAST, 50.14 FEET TO THE BEGINNING OF A CURVE, CONCAVE SOUTHEAST, HAVING A RADIUS OF 20.00 FEET;

THENCE NORTHEASTERLY 31.28 FEET ALONG THE ARC OF SAID CURVE TO THE RIGHT THROUGH A CENTRAL ANGLE OF 89 DEGREES 36 MINUTES 03 SECONDS;

THENCE SOUTH 89 DEGREES 59 MINUTES 46 SECONDS EAST, 90.14 FEET TO THE POINT OF BEGINNING.

CONTAINS 0.1748 ACRES, MORE OR LESS.

LOT AREA TABLE			
LOT #	AREA (SF)	AREA (AC)	CATEGORY
409	6,805	0.1562	C

CURVE TABLE						
CURVE	LENGTH	RADIUS	DELTA	TANGENT	CHORD	CHORD BRG
C1	189.33'	120.00'	90°23'53"	120.04'	170.30'	N44°47'47"W
C2	31.28'	20.00'	89°36'03"	19.86'	28.19'	S45°12'13"W

LINE TABLE		
LINE	BEARING	LENGTH
L1	S00°00'14"W	20.00'
L2	S00°00'14"W	20.00'
L3	N89°59'46"W	20.00'
L4	S89°59'46"E	20.00'
L5	N00°24'11"E	50.14'

TRACT USE TABLE			
TRACT	USE	AREA (SF)	AREA (AC)
A	HOA & **PUBLIC UTILITY EASEMENT	810	0.0186

LEGEND

⊙	FOUND MONUMENT, AS NOTED
◆	CORNER OF SUBDIVISION
⊕	BRASS CAP TO BE SET AT CONSTRUCTION
R/W	RIGHT-OF-WAY
M.C.R.	MARICOPA COUNTY RECORDER
PS	PRIVATE STREET
SVT	SIGHT VISIBILITY TRIANGLE EASEMENT
PUE	PUBLIC UTILITY EASEMENT
(401)	INDICATES STARTING AND ENDING LOT NUMBERING

NOTES

1. COMMON AREAS MAY INCLUDE OPEN SPACE, LANDSCAPING, PEDESTRIAN PATHS, AND/OR AMENITIES.
2. SPECIFIC EASEMENTS THAT ARE BEING DEDICATED AS PART OF THIS PLAT ARE FULLY DELINEATED ON THE FOLLOWING SHEETS.
3. ** THE EASEMENTS LISTED ABOVE (SHOWN WITH AN ASTERIK **) ONLY AFFECT A PORTION OF THE TRACT WITH WHICH THEY ARE LISTED, AND ARE FULLY DELINEATED WITHIN THE PLAT. OTHER "USES" LISTED ABOVE ARE COMMON AREA.

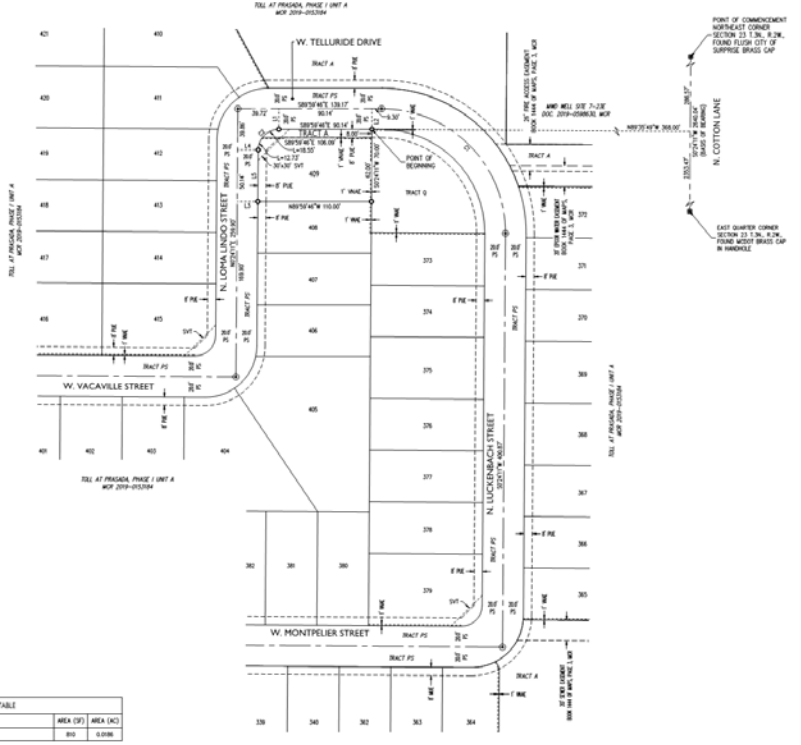

CASE NUMBER: FS22-1181

EPS GROUP
1130 N. Alma School Rd., Ste. 120
Mesa, AZ 85201
T (480) 503-2250 | F (480) 503-2258
W W W . E P S G R O U P . C O M

Project: Toll at Prasada, Phase I Unit A
Lot 409 & Tract A Re-plat
(LAMAR #4031)
Final Plat

Revisions:

Designer: RAJ
Drawn by: TP
Checked by: RJJ

ROBERT A. JOHNSTON
21695
CERTIFICATE EXPIRES 09/30/2023
REGISTERED LAND SURVEYOR

Job No.
16-339
FP02
Sheet No.
2
of 2

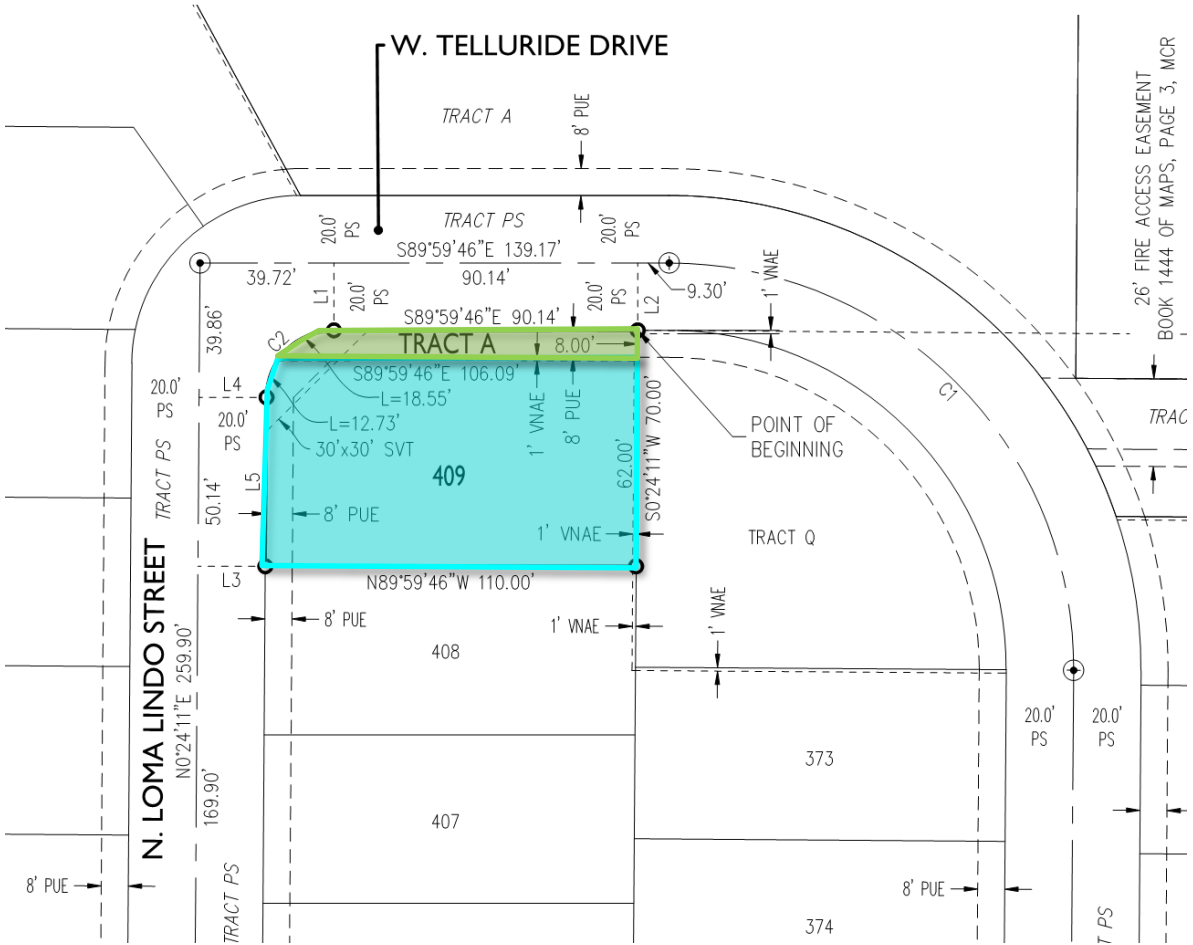

FS22-1181 FINAL PLAT EXHIBIT

SURPRISE
ARIZONA

QUESTIONS OR COMMENTS?

Thank You

CITY OF SURPRISE
Regular City Council Meeting

Council Meeting Date: January 17, 2023 Contact Person: Tanner Wessel
Submitting Department: Community Development District: District 6
Staff Recommendations:

Consent: Yes Regular: No Public Hearing: No Report/Discussion: No

Agenda Wording:
Consideration and action pertaining to approval of the Final Plat entitled, "Marley Park Promenade Amended" and dated October 10, 2022, a property located at the northeast corner of Cactus Road and Reems Road; Case FS22-1093.

Motion:
I move to approve the Final Plat entitled, "Marley Park Promenade Amended" and dated October 10, 2022.

Background:
Jeffrey Winter of Esencia LLC on behalf of The Carioca Company seeks approval of a Final Plat of the subject property.

Objective Analysis:
Approval of the proposed Final Plat will allow the applicant the ability to subdivide the property as proposed.

Policy Compliant:
The proposed Final Plat is consistent with the Surprise General Plan 2035, the City of Surprise Land Development Ordinance, and the Marley Park PAD.

Financial Impact:
While this item does not have an immediate or direct financial impact, ongoing development activity in the City will inevitably have a future financial impact as additional resources are needed to provide city services.

Budget Impact:
There is no anticipated budget impact related to this item.

FTE Impact:
This item does not have an impact on current staffing levels.

ATTACHMENTS:

1. 00-FS22-1093 Carioca Marley Park Promenade Final Plat - Staff Report
2. 01 - FS22-1093 Carioca Marley Park Promenade Final Plat - Vicinity Map
3. 02 - FS22-1093 Carioca Marley Park Promenade Final Plat - Zoning Map
4. 03 - FS22-1093 Carioca Marley Park Promenade Final Plat - Final Plat
5. 04 - FS22-1093 Carioca Marley Park Promenade Final Plat - Final Plat Exhibit
6. FS22-1093 Carioca Marley Park Promenade Final Plat - PowerPoint

---

FINAL PLAT

REPORT TO THE CITY COUNCIL

Case:	**FS22-1093**
Project Name:	Carioca Marley Park Promenade - Final Plat
Council District:	6 – Palo Verde
City Council Date:	**January 17, 2023**
Planner:	Tanner Wessel, Planner II

Owner:	CJ Shell, LLC
Applicant:	Jeffrey Winter with Esencia, LLC
Request:	Final Plat to consolidate eight (8) lots into two (2) lots to correspond with future development plans for Marley Park Promenade
Site Location:	Located at the northeast corner of Cactus Road and Reems Road
Site Size:	Approximately 15 acres (net)

Findings:

- The proposed Final Plat is consistent with the Surprise General Plan 2035.
- The proposed Final Plat is consistent with the Surprise Land Development Ordinance.
- The proposed Final Plat is consistent with the Marley Park PAD

Alternative Actions:

Approve – Approval of the proposed Final Plat will allow the applicant the ability to subdivide the property as proposed.

Deny – Denial of the requested Final Plat will prevent the applicant from subdividing the property as proposed.

Additional Information:

Jeffrey Winter of Esencia, LLC on behalf of CJ Shell, LLC requests approval of a Final Plat entitled “Marley Park Promenade Amended” dated October 10, 2022. The subject request involves a Final Plat to consolidate eight (8) vacant lots totaling approximately 15 net acres into two (2) lots. This re-plat will align with future development plans for Marley Park Promenade including the recently approved convenience store and gas station (FS21-1032) to be located on Lot 1 of this plat.

Surrounding Zoning:

The following map depicts the existing zoning of the subject site and its surroundings:

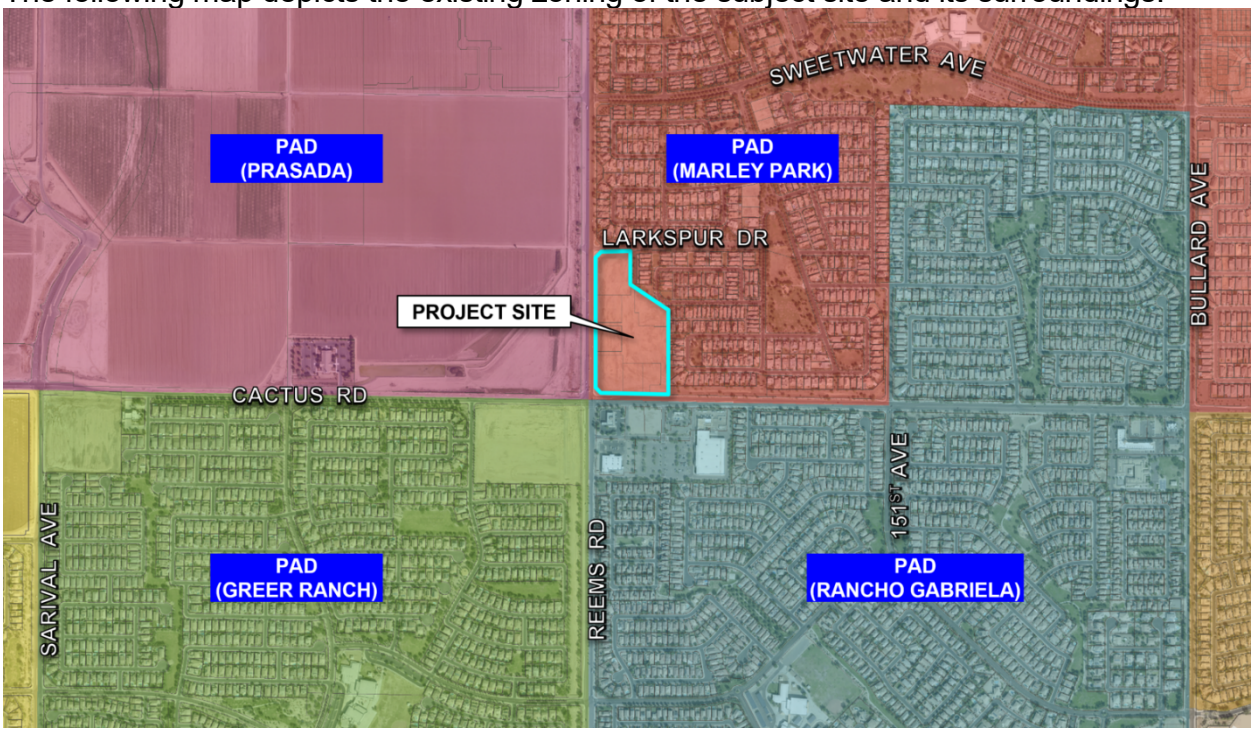

Prasada PAD (Mixed Use)	Marley Park PAD (Single-Family Residential)	Marley Park PAD (Single-Family Residential)
Prasada PAD (Mixed Use)	**Marley Park PAD** **(Commercial)**	Marley Park PAD (Single-Family Residential)
Greer Ranch PAD (Multi-Family)	Rancho Gabriela PAD (Commercial)	Rancho Gabriela PAD (Commercial)

The subject final plat dedicates an 8-foot Public Utility Easement (PUE) along parcel boundaries adjacent to Cactus Road, Reems Road, and Larkspur Drive. Additionally, this plat abandons the internal 6-foot water line maintenance easement, 12-foot water line easement, 12-foot private sewer easement, and 30-foot public utility easement which were previously recorded with the original Marley Park Promenade Final Plat to align with the original development plan.

The approximate area for each parcel is shown below:

- Lot 1 – 2.076 acres
- Lot 2 – 12.924 acres

The proposed Final Plat dedicates the following:

- 8-foot Public Utility Easement (PUE) along the southern and eastern boundary of Lot 1, as well as, eastern and northern boundary of Lot 2.

Attachments:

01 Vicinity Map
02 Zoning Map
03 Final Plat
04 Plat Exhibit
PPT

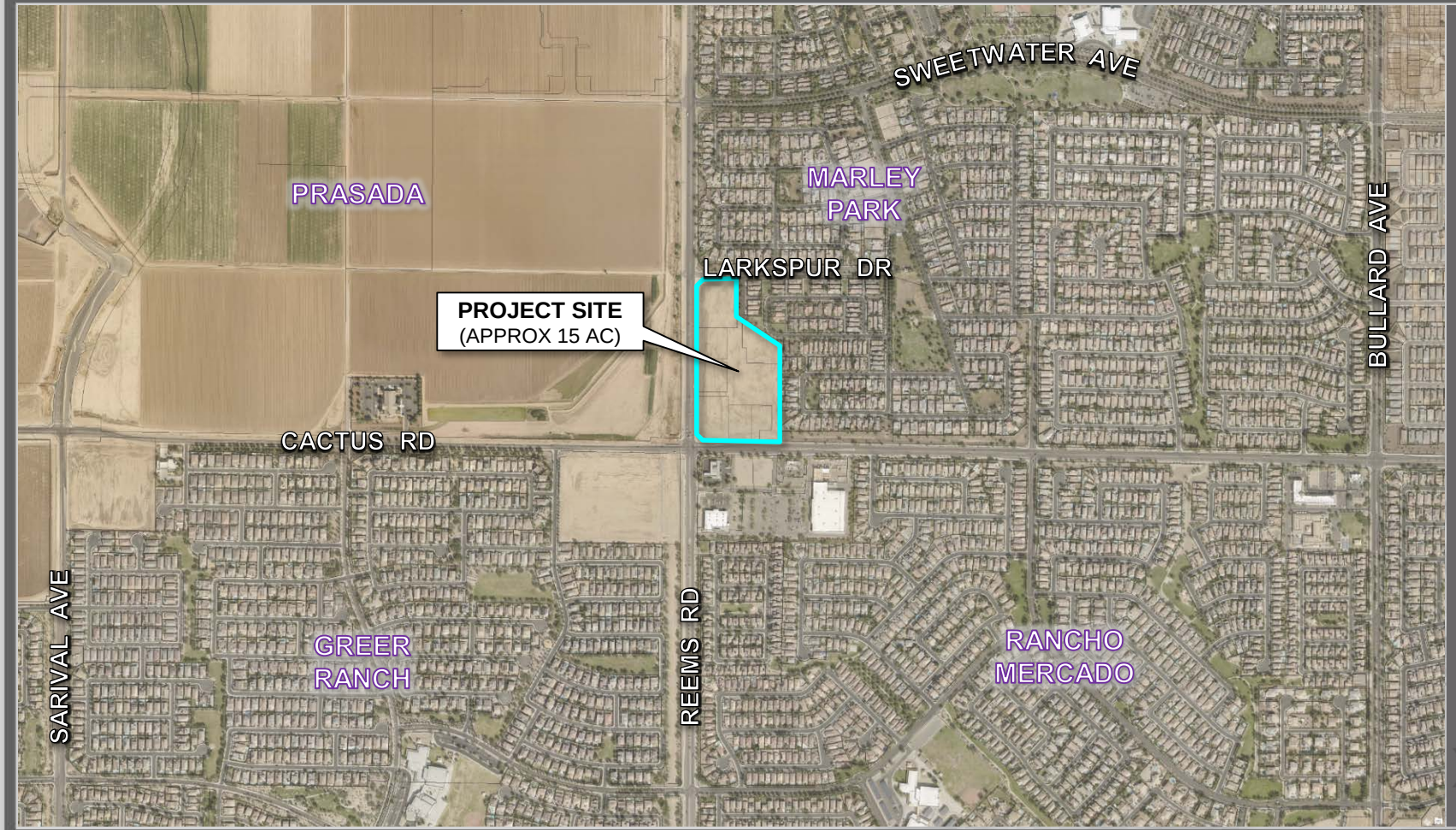

FS22-1093 VICINITY MAP

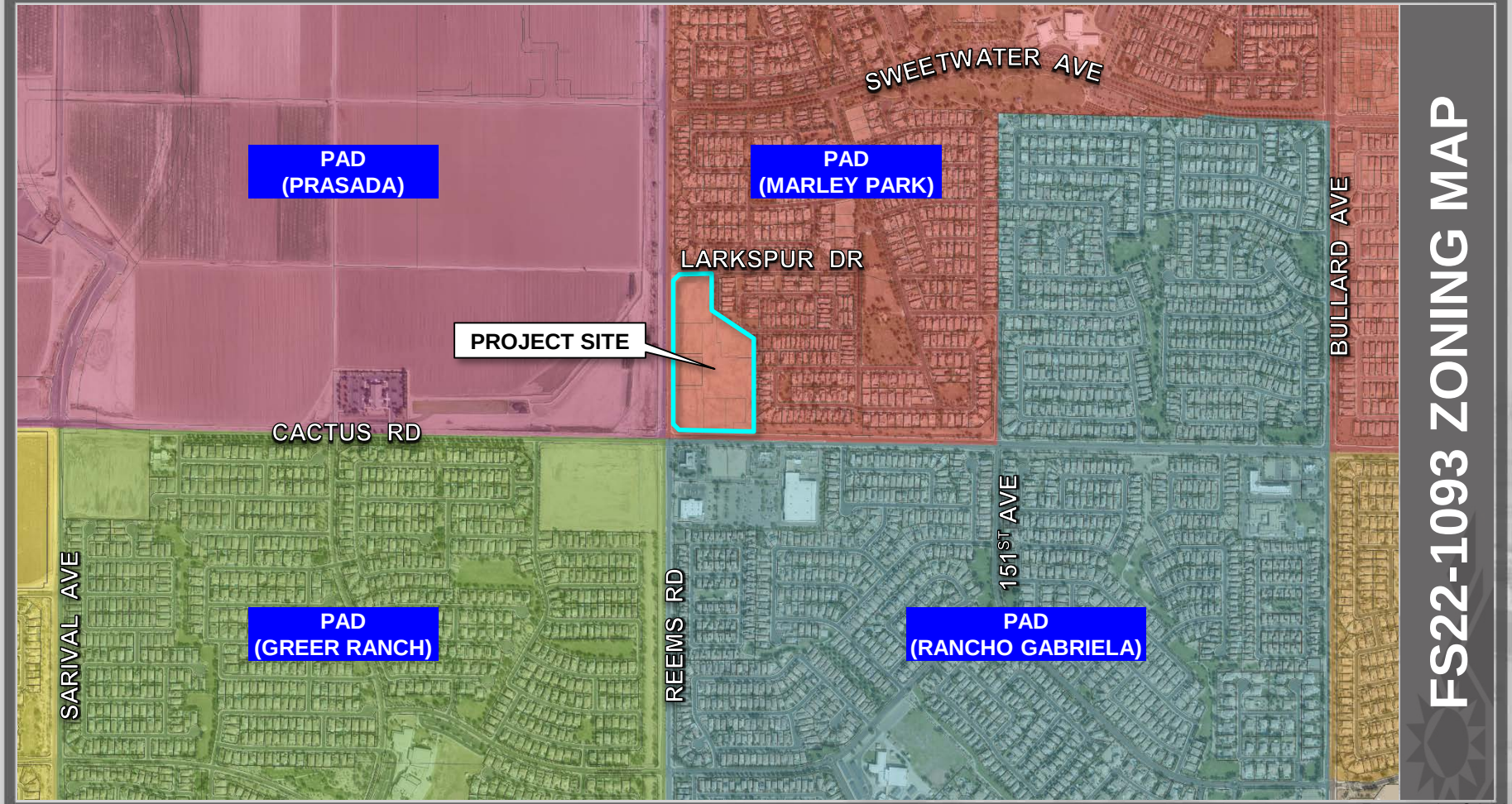

FS22-1093 ZONING MAP

FINAL PLAT
OF
"MARLEY PARK PROMENADE AMENDED"

**A REPLAT OF LOTS 1 THROUGH 8 OF "MARLEY PARK PROMENADE",
RECORDED IN BOOK 1000 OF MAPS, PAGE 32,
RECORDS OF MARICOPA COUNTY, ARIZONA
A PORTION OF THE SOUTHWEST QUARTER OF SECTION 17,
TOWNSHIP 3 NORTH, RANGE 1 WEST OF THE
GILA & SALT RIVER BASE & MERIDIAN, MARICOPA COUNTY, ARIZONA**

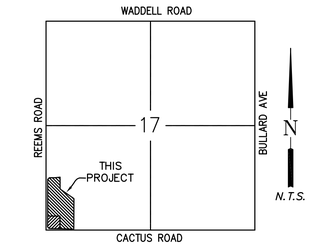

VICINITY MAP

SECTION 17, T3N, R1W, G&SRB & M

DEDICATION

STATE OF ARIZONA)
) SS
COUNTY OF MARICOPA)

KNOW ALL PERSONS BY THESE PRESENTS; **CJ SHELL, LLC, AN ARIZONA LIMITED LIABILITY COMPANY**, AS OWNER, HAS SUBDIVIDED UNDER THE NAME OF "MARLEY PARK PROMENADE", A PORTION OF SOUTHWEST QUARTER OF SECTION 17, TOWNSHIP 3 NORTH, RANGE 1 WEST, OF THE GILA AND SALT RIVER BASE & MERIDIAN, MARICOPA COUNTY, ARIZONA, AS SHOWN AND PLATTED HEREON AND DOES HEREBY PUBLISH THIS PLAT AS THE PLAT OF "MARLEY PARK PROMENADE" AND HEREBY DECLARES THAT THIS PLAT SETS FORTH THE LOCATION AND GIVES THE DIMENSIONS OF EACH LOT, TRACT, STREET, AND EASEMENT CONSTITUTING SAME, AND THAT EACH LOT, TRACT, STREET, AND EASEMENT SHALL BE KNOWN BY THE NUMBER, LETTER, AND/OR NAME GIVEN TO EACH RESPECTIVELY AS SHOWN ON THIS PLAT. A PUBLIC UTILITY EASEMENT IS HEREBY DECLARED AS SHOWN ON SAID PLAT.

ALL IMPROVEMENTS, FOR STREETS AND PUBLIC UTILITIES OWNED AND OPERATED BY THE CITY, INSTALLED OR CONSTRUCTED BY OWNER WITHIN THE PUBLIC RIGHTS–OF–WAY, THE EASEMENTS, OR ANY TRACTS OR PARCELS HEREBY DEDICATED TO THE CITY OF SURPRISE SHALL BE DEEMED TO HAVE BEEN DEDICATED BY OWNER TO THE CITY UPON THEIR COMPLETION; HOWEVER, SUCH TRANSFER SHALL NOT OCCUR UNTIL THE CITY COUNCIL FOR THE CITY OF SURPRISE MANIFESTS ITS ACCEPTANCE BY SEPARATE FORMAL COUNCIL ACTION.

OWNER HEREBY GRANTS TO THE UNITED STATES OF AMERICA DEPARTMENT OF THE AIR FORCE ("USAF") AN AVIGATION EASEMENT OVER AND ACROSS THIS PLAT AND EVERY LOT AND PARCEL THEREOF, WHICH EASEMENT SHALL INCLUDE, BUT NOT BE LIMITED TO, THE RIGHT OF FLIGHT OF AIRCRAFT OVER THIS PLAT, TOGETHER WITH ITS ATTENDANT NOISE, VIBRATIONS, FUMES, DUST, FUEL AND LUBRICANT PARTICLES, AND ALL OTHER EFFECTS THAT MAY BE CAUSED BY THE OPERATION OF AIRCRAFT LANDING AT, OR TAKING OFF FROM, OR OPERATING AT OR ON LUKE AIR FORCE BASE AND AUXILIARY FIELD.

THE MAINTENANCE OF LANDSCAPING WITHIN THE OPEN SPACES, LANDSCAPED TRACTS, RETENTION BASINS, AND PARKS SHALL BE THE RESPONSIBILITY OF THE OWNER OR THE HOMEOWNERS' ASSOCIATION FORMED BY THE OWNER.

THE MAINTENANCE OF LANDSCAPING WITHIN THE ADJACENT PUBLIC RIGHTS–OF–WAY, INCLUDING LANDSCAPED MEDIANS WITHIN COLLECTORS AND LOCAL STREETS, AND LANDSCAPED AREAS BETWEEN THE CURB AND THE DETACHED SIDEWALK, SHALL BE THE RESPONSIBILITY OF THE ADJACENT PROPERTY OWNER OR THE HOMEOWNERS' ASSOCIATION FORMED BY THE ADJACENT PROPERTY.

LANDSCAPING MAINTENANCE OF THE MEDIANS WITHIN THE PUBLIC RIGHT– OF–WAY WITHIN ANY ARTERIAL OR PARKWAY STREET CLASSIFICATION SHALL BE RESPONSIBILITY OF THE CITY OF SURPRISE AFTER ACCEPTANCE.

OWNER HEREBY GRANTS TO THE CITY OF SURPRISE A PERPETUAL CROSS ACCESS EASEMENT ACROSS THE PLAT INCLUDING ROADS AND STREETS, OPEN SPACES, COMMUNITY FACILITIES, TRACTS, SIDEWALKS, DRAINAGE BASINS AND ANY PROPERTY WITHIN THE PLAT OWNED BY THE HOMEOWNERS ASSOCIATION FOR THE PURPOSE OF PROVIDING CONTINUOUS AND UNINTERRUPTED INGRESS AND EGRESS FOR EMERGENCY VEHICLES

OWNER OR SUBSEQUENT OWNERS HEREBY GRANT TO THE CITY OF SURPRISE ALL GROUND AND SURFACE WATER RIGHTS ASSOCIATED WITH THE PROPERTY. OWNER OR SUBSEQUENT OWNERS SHALL CONVERT EXISTING IRRIGATION GRANDFATHER RIGHTS APPURTENANT TO THE PROPERTY TO TYPE I NON–IRRIGATION FOR LANDSCAPE OPEN AREAS AND RIGHTS OF WAY. OWNER OR SUBSEQUENT OWNERS SHALL EXTINGUISH AND TRANSFER TO THE CITY ALL IRRIGATION GRANDFATHER RIGHTS WHICH REMAIN AFTER THE TYPE I CONVERSION. OWNERS OR SUBSEQUENT OWNERS HEREBY GRANT TO THE CITY OF SURPRISE ALL EXISTING WATER CREDITS, INCLUDING BUT NOT LIMITED TO BANKED, LONG TERM AND EXTINGUISHMENT CREDITS ASSOCIATED WITH THE PROPERTY.

OWNER HEREBY GRANTS TO THE CITY OF SURPRISE A PERPETUAL NON–EXCLUSIVE EASEMENT OVER, UPON AND ACROSS THE AREAS DESIGNATED AS SIGHT VISIBILITY TRIANGLES FOR THE PURPOSE OF ENSURING THAT THESE AREAS REMAIN FREE OF SIGHT VISIBILITY OBSTRUCTIONS.

OWNER HEREBY GRANTS TO THE CITY OF SURPRISE A PERPETUAL NON–EXCLUSIVE PEDESTRIAN ACCESS AND SIDEWALK CONSTRUCTION AND MAINTENANCE EASEMENT OVER, UPON, AND ACROSS THE AREAS DESIGNATED AS SIDEWALK EASEMENTS AS SHOWN ON THE PLAT.

IN WITNESS WHEREOF, **CJ SHELL, LLC, AN ARIZONA LIMITED LIABILITY COMPANY**, AS OWNER HAS HEREUNTO CAUSED ITS NAME TO BE SIGNED AND THE SAME ATTESTED BY THE SIGNATURE OF _____, IT'S _____ THEREUNTO DULY AUTHORIZED THIS _____ DAY OF _____, 20_____.

BY: _____

IT'S: _____

ACKNOWLEDGMENT

STATE OF ARIZONA)
) SS
COUNTY OF MARICOPA)

BEFORE ME THIS _____ DAY OF _____, 20_____, THAT _____ PERSONALLY APPEARED BEFORE ME, THE UNDERSIGNED NOTARY PUBLIC, WHO ACKNOWLEDGED HIMSELF/HERSELF TO BE THE _____ OF **CJ SHELL, LLC, A ARIZONA LIMITED LIABILITY COMPANY**, THE LEGAL OWNER OF A THE PROPERTY PLATTED HERON AND ACKNOWLEDGE THAT HE/SHE AS SUCH, EXECUTED THIS INSTRUMENT FOR THAT PURPOSE HERIN CONTAINED.

IN WITNESS WHEREOF: I HEREUNTO SET MY HAND AND OFFICIAL SEAL.

_____
NOTARY PUBLIC

MY COMMISSION EXPIRES _____

SURVEYOR

MICHAEL J. THOMPSON RLS2509
HELIX ENGINEERING, LLC.
3240 E UNION HILLS DR.
SUITE #112
PHOENIX, AZ 85060
602–788–2616
MT@HXENG.COM

OWNER

CJ SHELL, LLC
2601 W. DUNLAP
PHOENIX, AZ 85201
602–395–2600

LEGAL DESCRIPTION

A PARCEL OF LAND LYING WITHIN SECTION 17, TOWNSHIP 3 NORTH, RANGE 1 WEST, OF THE GILA AND SALT RIVER MERIDIAN, MARICOPA COUNTY, ARIZONA, MORE PARTICULARLY DESCRIBED AS FOLLOW:

LOTS 1 THROUGH 8 OF "MARLEY PARK PROMENADE" ACCORDING TO BOOK 1000, OF MAPS PAGE 32, MARICOPA COUNTY, ARIZONA

BASIS OF BEARING

THE SOUTH LINE OF THE SOUTHWEST QUARTER OF SECTION 17, T3N, R1W, BEING THE MONUMENT LINE OF CACTUS ROAD FROM A FOUND BRASS CAP STEM IN A HAND HOLE DOWN 1.5' AT THE INTERSECTION OF CACTUS ROAD AND REEMS ROAD WAS ASSUMED TO BE SOUTH 89°49'53" EAST 2636.34 FEET TO A FOUND 3' CITY OF SURPRISE BRASS CAP IN HAND HOLE AT THE INTERSECTION OF CACTUS AND 151ST AVE AS PER BOOK 1000, OF MAPS, PAGE 32, MCR, FINAL PLAT OF "MARLEY PARK PROMENADE"

PUBLIC NOTICE

THE LOTS DEPICTED ON THIS PLAT ARE LOCATED WITHIN THE VICINITY OF LUKE AIR FORCE BASE AND MAY BE SUBJECT TO OVERFLIGHTS BY JET AIRCRAFT. ALL STRUCTURES WITHIN THIS PLAT SHALL BE CONSTRUCTED IN COMPLIANCE WITH THE SOUND ATTENUATION STANDARDS ADOPTED BY THE CITY OF SURPRISE. A MAP DEPICTING THE MOST CURRENT ADOPTED MAG NOISE CONTOURS IN RELATION TO THIS PLAT SHALL BE DISPLAYED IN ALL SALES OFFICES. ADDITIONAL INFORMATION MAY BE OBTAINED BY CONTACTING THE CITY OF SURPRISE COMMUNITY DEVELOPMENT DEPARTMENT.

RELEASE OF LIABILITY

CJ SHELL, LLC, AN ARIZONA LIMITED LIABILITY COMPANY, AS OWNER DOES HEREBY (1) RELEASE AND DISCHARGE THE UNITED STATES OF AMERICA DEPARTMENT OF THE AIR FORCE (USAF) AND THE CITY OF SURPRISE, AND (2) INDEMNIFY, DEFEND, AND HOLD HARMLESS THE USAF AND THE CITY OF SURPRISE, OF AND FROM ANY LIABILITY FOR ANY AND ALL CLAIMS FOR DAMAGES OF ANY KIND TO PERSONS OR PROPERTY THAT MAY ARISE AT ANY TIME IN THE FUTURE OVER, OR IN CONNECTION WITH AIRCRAFT OVERFLIGHTS FROM AIRCRAFT UTILIZING LUKE AIR FORCE BASE, WHETHER SUCH DAMAGE SHALL ORIGINATE FROM NOISE, VIBRATION, FUMES, DUST, FUEL AND LUBRICANT PARTICLES, AND ALL OTHER EFFECTS THAT MAY BE CAUSED BY THE OPERATION OF AIRCRAFT LANDING AT, OR TAKING OFF FROM, OR OPERATING AT OR ON LUKE AIR FORCE BASE AND ITS AUXILIARY FIELDS. THIS INSTRUMENT SHALL RUN WITH THE LAND AND BE BINDING UPON OWNER AND ITS HEIRS, ASSIGNS, AND SUCCESSORS IN INTEREST TO THIS PLAT OR ANY PARCEL OR LOT THEREOF. THIS INSTRUMENT DOES NOT RELEASE THE USAF FROM LIABILITY FOR DAMAGE OR INJURY TO PERSON OR PROPERTY CAUSED BY FALLING AIRCRAFT OR FALLING PHYSICAL OBJECTS FROM AIRCRAFT, EXCEPT AS STATED HEREIN WITH RESPECT TO NOISE, FUMES, DUST, FUEL, AND LUBRICANT PARTICLES.

LOT AREA TABLE

LOT	NET S.F. / ACRES
1	90,440.49 S.F. / 2.076 ACRES
2	562,955.42 S.F. / 12.924 ACRES

FLOOD ZONE

THE PROPERTY IS LOCATED WITHIN AN AREA HAVING FLOOD ZONE "A" AND "X" BY THE FEDERAL EMERGENCY MANAGEMENT AGENCY, ON FLOOD INSURANCE RATE MAP NO. 04013C166L, WITH A DATE OF IDENTIFICATION OF OCTOBER 16, 2013, FOR COMMUNITY NO. 040053, IN MARICOPA COUNTY, STATE OF ARIZONA, WHICH IS THE CURRENT FLOOD INSURANCE RATE MAP FOR THE COMMUNITY IN WHICH SAID PROPERTY IS SITUATED.

GENERAL NOTES

1. NO ON–SITE GRADING OR EXCAVATION SHALL OCCUR WITHOUT FIRST OBTAINING A PERMIT FROM THE CITY OF SURPRISE.

2. SIGHT DISTANCE REQUIREMENTS ON ARTERIALS AND COLLECTORS WILL ADHERE TO SURPRISE DETAIL 4–01. SIGHT VISIBILITY WITHIN THE UNOBSTRUCTED VIEW EASEMENT AREA AND IN FRONT OF STOP SIGNS MUST MEET OR EXCEED REQUIREMENTS IN SURPRISE DETAILS 4–01 AND 4–02. TREES, SHRUBS, AND OTHER LANDSCAPING ARE PERMITTED WITHIN THE SIGHT VISIBILITY TRIANGLE PROVIDED LIMBS, LEAVES, NEEDLES OR OTHER FOLIAGE ARE KEPT BELOW 30 INCHES OR ABOVE 84 INCHES, PER SURPRISE EDS DETAIL 4–01.

REFERENCES

R1 BOOK 1000, OF MAPS, PAGE 32, MCR, FINAL PLAT OF "MARLEY PARK PROMENADE"

APPROVALS

DATA ON THIS PLAT REVIEWED AND APPROVED THIS _____ DAY OF _____, 20_____ BY THE CITY ENGINEER OF SURPRISE, ARIZONA

APPROVED: _____
CITY ENGINEER DATE

APPROVED BY THE COUNCIL OF THE CITY OF SURPRISE, ARIZONA, THIS _____ DAY OF _____, 20_____

ATTEST:

_____
MAYOR DATE

_____
CITY CLERK DATE

SURVEYOR'S CERTIFICATE

I, MICHAEL J. THOMPSON, HEREBY CERTIFY THAT I AM A REGISTERED LAND SURVEYOR IN THE STATE OF ARIZONA, THAT THIS MAP, CONSISTING OF 3 SHEETS, CORRECTLY REPRESENTS A BOUNDARY SURVEY MADE UNDER MY SUPERVISION DURING THE MONTH OF **APRIL 2022**, THAT THIS PLAT IS TRUE AND COMPLETE, THAT ALL MONUMENTS SHOWN ACTUALLY EXIST, THAT THEIR POSITIONS ARE CORRECTLY SHOWN AND THAT SAID MONUMENTS ARE SUFFICIENT TO ENABLE THE SURVEY TO BE RETRACED.

_____
BY: MICHAEL J. THOMPSON
REGISTERED LAND SURVEYOR NO. 25090
digin@cox.net

REGISTERED LAND SURVEYOR
CERTIFICATE NO.
25090
MICHAEL J.
THOMPSON
10/10/22
ARIZONA U.S.A.
Expires 09/30/2022

MICHAEL J. THOMPSON #25090
HELIX ENGINEERING, LLC
3240 E. UNION HILLS DR #112
PHOENIX, AZ 85050
602–788–2616
MT@HXENG.COM

FS22-1093

Oct 11, 2022 - 3:08pm
O:_JOBS\613 Cactus Reems Coriaca\DWGS\PLAT\613 Cactus Reems Coriaca Final Plat v6.dwg

REGISTERED LAND SURVEYOR
CERTIFICATE NO.
25090
MICHAEL J.
THOMPSON
10/10/22
ARIZONA U.S.A.
Expires 09/30/2022

Helix Engineering, LLC
Engineering / Surveying / Consulting
3240 E Union Hills
Suite 113
Phoenix AZ 85050
ph 602-788-2616
www.hxeng.com

THIS DRAWING IS COPYRIGHTED AND IS THE SOLE PROPERTY OF THE OWNER. IT IS PRODUCED SOLELY FOR USE BY THE OWNER AND ITS AFFILIATES. REPRODUCTION OR USE OF THIS DRAWING AND/OR THE INFORMATION CONTAINED IN IT IS FORBIDDEN WITHOUT THE WRITTEN PERMISSION OF THE OWNER.

TWO WORKING DAYS BEFORE YOU DIG.
CALL FOR THE BLUE STAKES
1–800–782–5348
BLUE STAKE CENTER

RELEASE	
DATE	

REVISIONS		
NO.	DATE	
1	.	.
2	.	.
3	.	.

PROJECT NAME
FINAL PLAT

PROJECT ADDRESS
CACTUS RD & REEMS RD
SURPRISE, ARIZONA
85379

PROJECT AREA
CACTUS RD & REEMS RD

HELIX JOB NUMBER
613

IN HOUSE
DRAWN BY: MRM
CHECKED BY: MJT

SHEET TITLE
A FINAL PLAT FOR A PORTION OF THE SW 1/4 OF SEC 17 T3N, R1W, G. & S.R.B. & M.

SHEET
PAGE
1 OF 3

PLOT SCALE: 1:1 @ 24"x36"; 1:2.2 @ 11"x17"

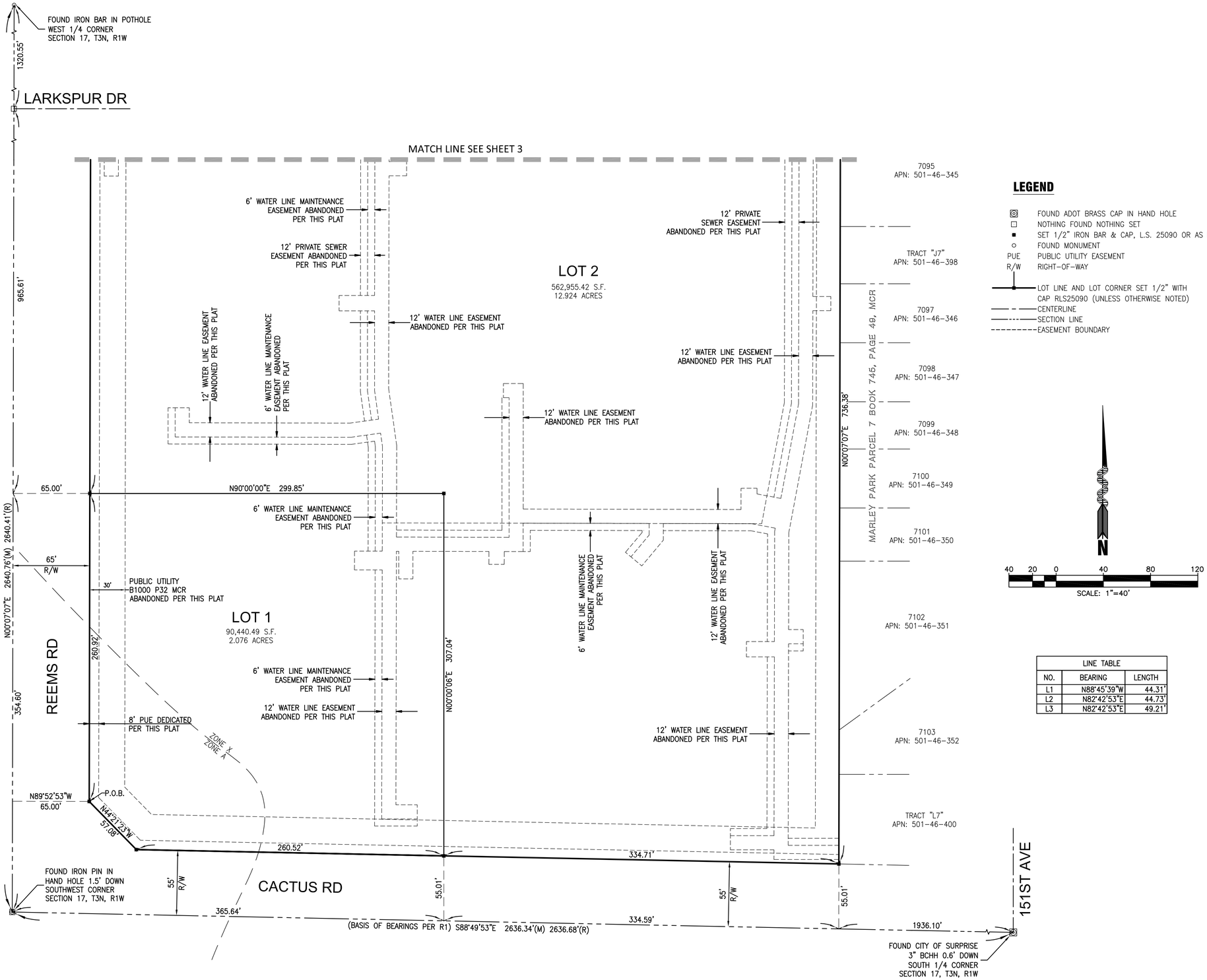

LEGEND

◎	FOUND ADOT BRASS CAP IN HAND HOLE
□	NOTHING FOUND NOTHING SET
■	SET 1/2" IRON BAR & CAP, L.S. 25090 OR AS NOTED
○	FOUND MONUMENT
PUE	PUBLIC UTILITY EASEMENT
R/W	RIGHT-OF-WAY
	LOT LINE AND LOT CORNER SET 1/2" WITH CAP RLS25090 (UNLESS OTHERWISE NOTED)
	CENTERLINE
	SECTION LINE
	EASEMENT BOUNDARY

LINE TABLE		
NO.	BEARING	LENGTH
L1	N88°45'39"W	44.31'
L2	N82°42'53"E	44.73'
L3	N82°42'53"E	49.21'

REGISTERED LAND SURVEYOR
CERTIFICATE NO.
25090
MICHAEL J. THOMPSON
10/10/22
ARIZONA U.S.A.
Expires 09/30/2022

Helix Engineering, LLC
Engineering / Surveying / Consulting
3240 E Union Hills
Suite 113
Phoenix AZ 85050
ph 602-788-2616
www.hxeng.com

THIS DRAWING IS COPYRIGHTED AND IS THE SOLE PROPERTY OF THE OWNER. IT IS PRODUCED SOLELY FOR USE BY THE OWNER AND ITS AFFILIATES. REPRODUCTION OR USE OF THIS DRAWING AND/OR THE INFORMATION CONTAINED IN IT IS FORBIDDEN WITHOUT THE WRITTEN PERMISSION OF THE OWNER.

TWO WORKING DAYS BEFORE YOU DIG.
CALL FOR THE BLUE STAKES
1-800-782-5348
BLUE STAKE CENTER

RELEASE	
DATE	

REVISIONS		
NO.	DATE	
1		
2	.	.
3	.	.

PROJECT NAME

FINAL PLAT

PROJECT ADDRESS

CACTUS RD & REEMS RD
SURPRISE, ARIZONA
85379

PROJECT AREA

CACTUS RD & REEMS RD

HELIX JOB NUMBER: 613
IN HOUSE
DRAWN BY: MRM
CHECKED BY: MJT

SHEET TITLE

A FINAL PLAT FOR A PORTION OF THE SW 1/4 OF SEC 17 T3N, R1W, G. & S.R.B. & M.

SHEET: 2 OF PAGE: 3

PLOT SCALE: 1:1 @ 24"x36"; 1:2.2 @ 11"x17"

FS22-1093

Oct 11, 2022 - 3:09pm
C:_JOBS\613 Cactus Reems Coricoca\DWGS\PLAT\613 Cactus Reems Coricoca Final Plat v6.dwg

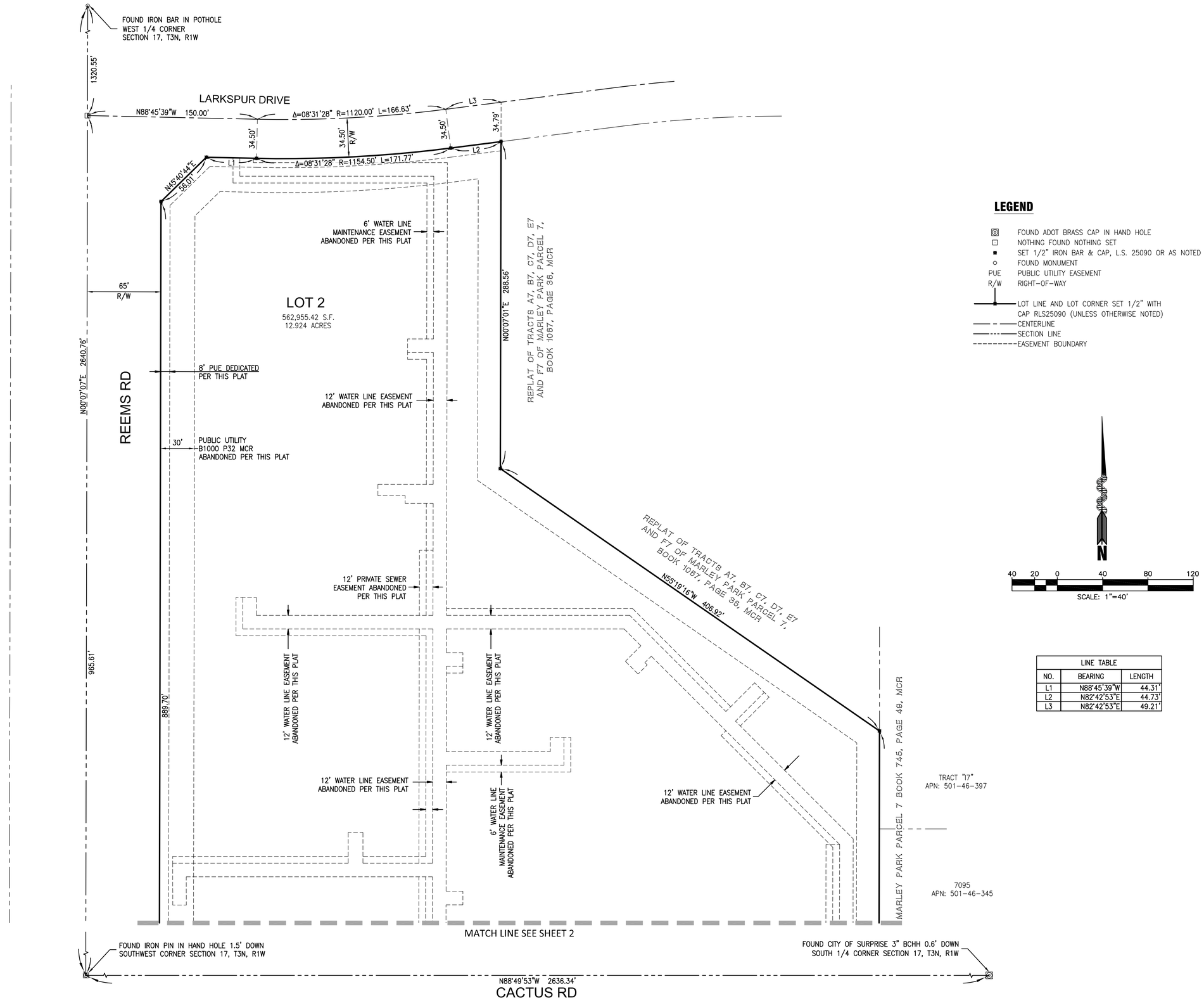

LEGEND

◎	FOUND ADOT BRASS CAP IN HAND HOLE
□	NOTHING FOUND NOTHING SET
■	SET 1/2" IRON BAR & CAP, L.S. 25090 OR AS NOTED
○	FOUND MONUMENT
PUE	PUBLIC UTILITY EASEMENT
R/W	RIGHT-OF-WAY
	LOT LINE AND LOT CORNER SET 1/2" WITH CAP RLS25090 (UNLESS OTHERWISE NOTED)
	CENTERLINE
	SECTION LINE
	EASEMENT BOUNDARY

LINE TABLE		
NO.	BEARING	LENGTH
L1	N88°45'39"W	44.31'
L2	N82°42'53"E	44.73'
L3	N82°42'53"E	49.21'

REGISTERED LAND SURVEYOR
CERTIFICATE NO.
25090
MICHAEL J.
THOMPSON
10/10/22
ARIZONA U.S.A.
Expires 09/30/2022

Helix Engineering, LLC
Engineering / Surveying / Consulting
3240 E Union Hills
Suite 113
Phoenix AZ 85050
ph 602-788-2616
www.hxeng.com

THIS DRAWING IS COPYRIGHTED AND IS THE SOLE PROPERTY OF THE OWNER. IT IS PRODUCED SOLELY FOR USE BY THE OWNER AND ITS AFFILIATES. REPRODUCTION OR USE OF THIS DRAWING AND/OR THE INFORMATION CONTAINED IN IT IS FORBIDDEN WITHOUT THE WRITTEN PERMISSION OF THE OWNER.

TWO WORKING DAYS BEFORE YOU DIG.
CALL FOR THE BLUE STAKES
1-800-782-5348
BLUE STAKE CENTER

RELEASE	
DATE	

REVISIONS		
NO.	DATE	
1		
2	.	.
3	.	.

PROJECT NAME

FINAL PLAT

PROJECT ADDRESS

CACTUS RD & REEMS RD
SURPRISE, ARIZONA
85379

PROJECT AREA

CACTUS RD & REEMS RD

HELIX JOB NUMBER	IN HOUSE
613	DRAWN BY: MRM CHECKED BY: MJT

SHEET TITLE

A FINAL PLAT FOR A PORTION OF THE SW 1/4 OF SEC 17 T3N, R1W, G. & S.R.B. & M.

SHEET	PAGE
	3 OF 3

PLOT SCALE: 1:1 @ 24"x36"; 1:2.2 @ 11"x17"

FS22-1093

Oct 11, 2022 - 3:10pm
O:_WORK\613 Cactus Reems Corioca\DWGS\PLAT\613 Cactus Reems Corioca Final Plat v6.dwg

FS22-1093 PLAT EXHIBIT

SURPRISE
ARIZONA

FS22-1093
Carioca Marley Park Promenade – Final Plat

City Council

January 17, 2023

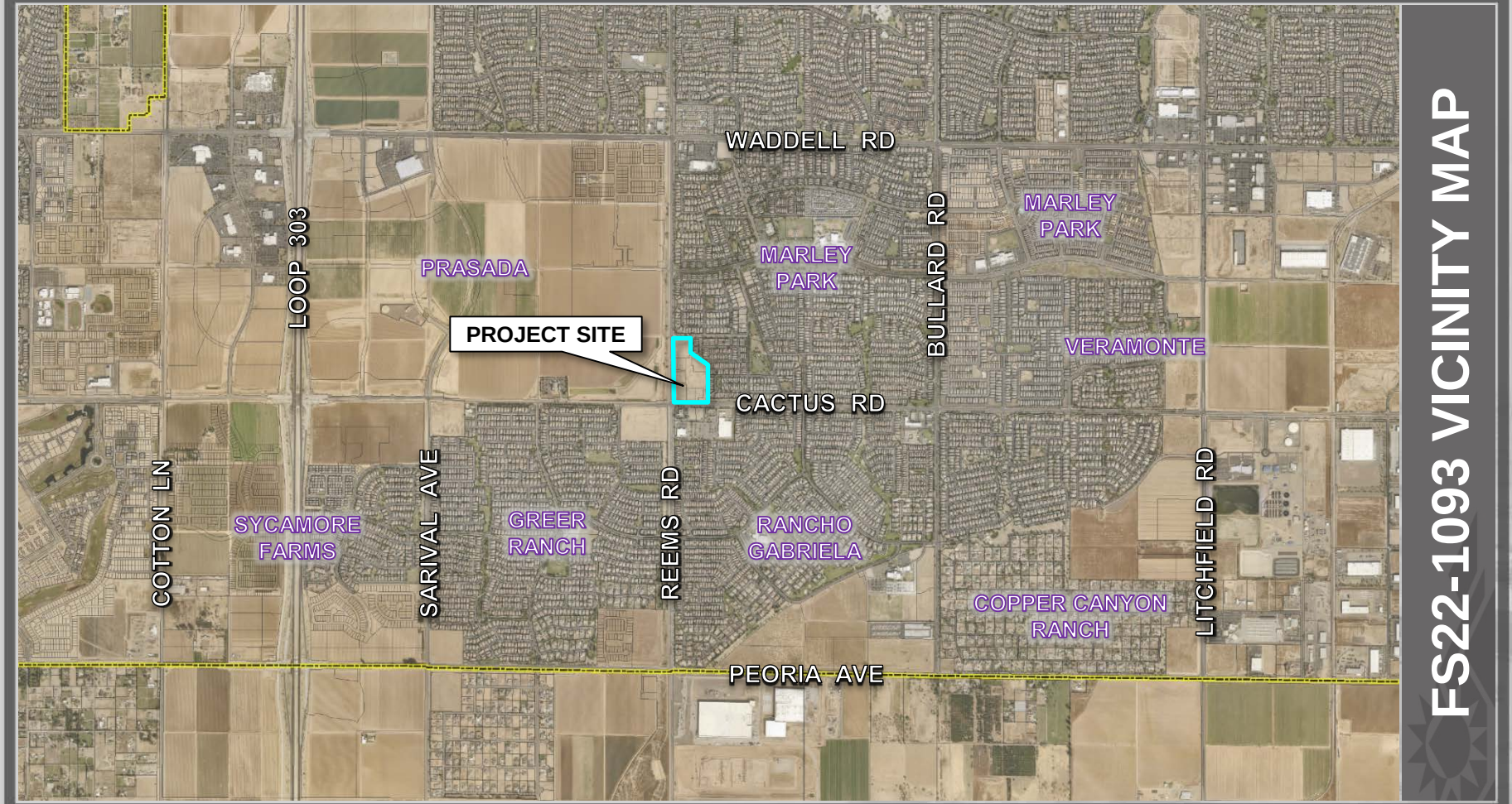

FS22-1093 VICINITY MAP

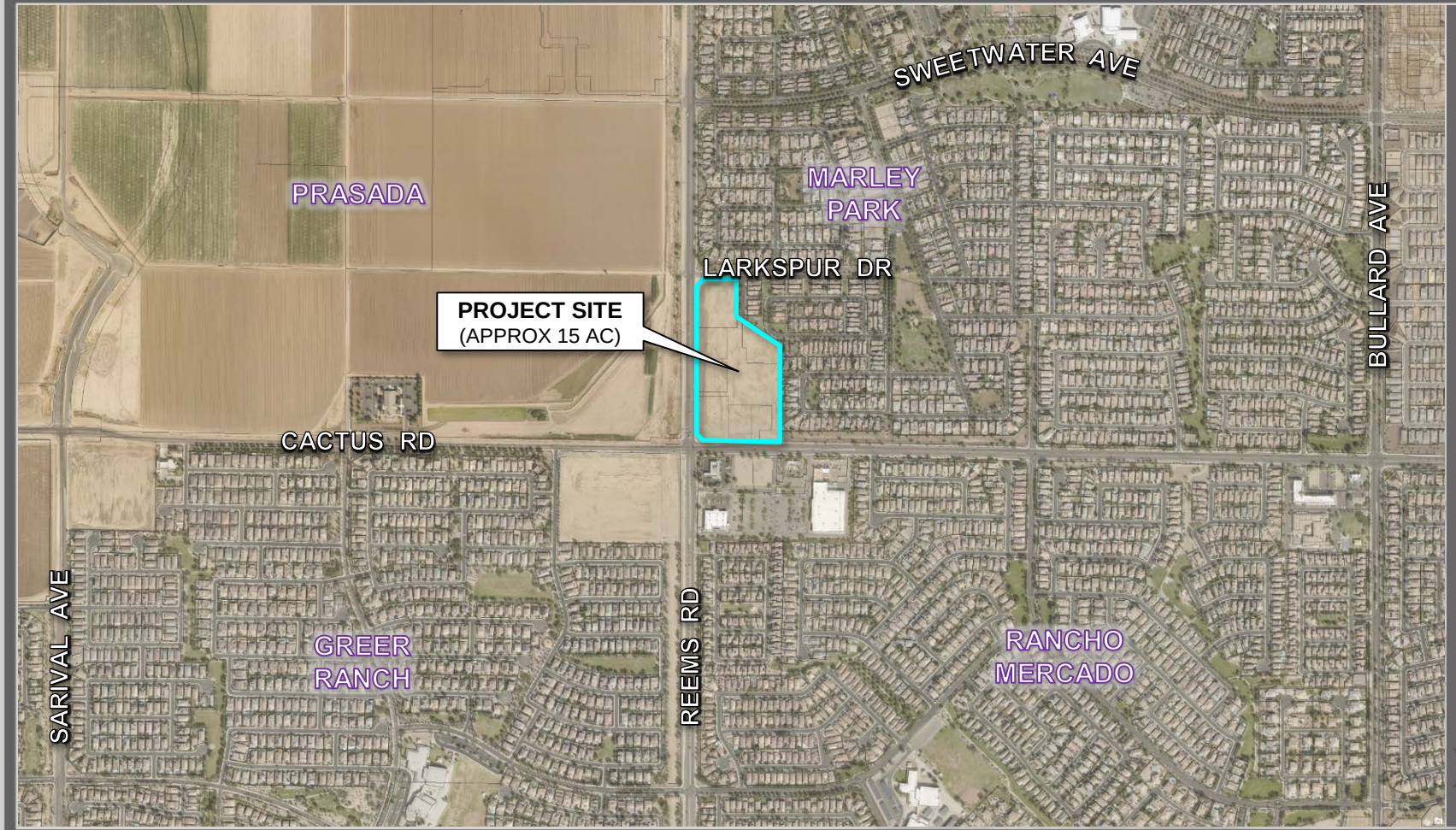

FS22-1093 VICINITY MAP

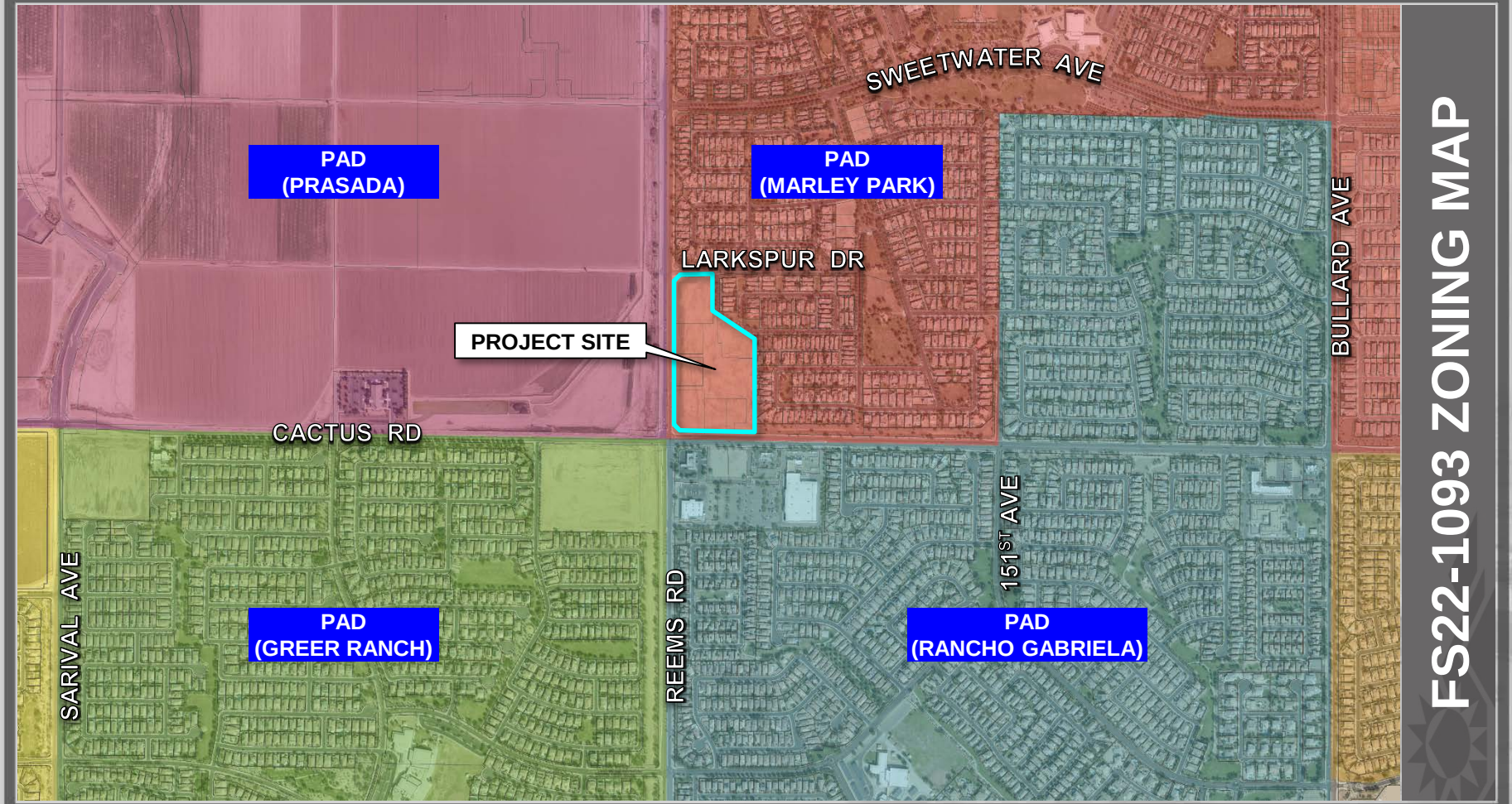
PAD
(PRASADA)
PAD
(MARLEY PARK)
SWEETWATER AVE
LARKSPUR DR
PROJECT SITE
BULLARD AVE
CACTUS RD
SARIVAL AVE
PAD
(GREER RANCH)
REEMS RD
151ST AVE
PAD
(RANCHO GABRIELA)
FS22-1093 ZONING MAP

FS22-1093 PLAT EXHIBIT

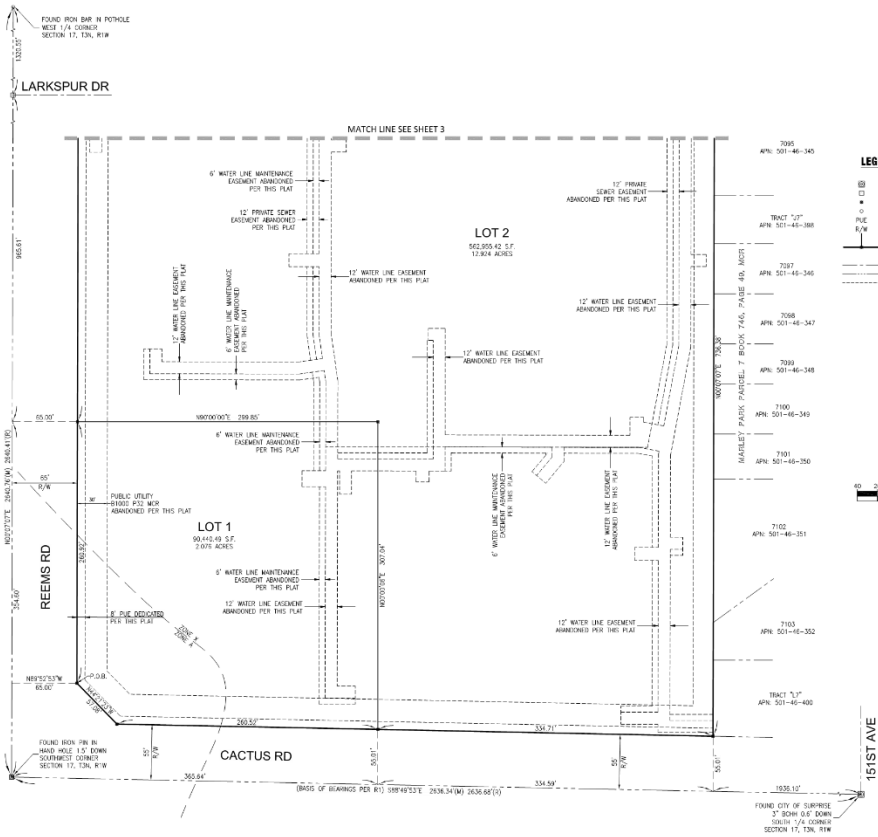

Helix Engineering, LLC
Engineering / Surveying / Consulting
3240 E Union Hills
Suite 113
Phoenix AZ 85050
(P) 602-788-2616
www.hseng.com

THIS DRAWING IS COPYRIGHTED AND IS THE SOLE PROPERTY OF THE OWNER. IT IS PRODUCED SOLELY FOR USE BY THE OWNER AND ITS AFFILIATES. REPRODUCTION OR USE OF THIS DRAWING AND/OR THE INFORMATION CONTAINED IN IT IS FORBIDDEN WITHOUT THE WRITTEN PERMISSION OF THE OWNER.

TWO WORKING DAYS BEFORE YOU DIG, CALL FOR THE BLUE STAKES 1-800-782-5348 BLUE STAKE CENTER

RELEASE
DATE

REVISIONS
NO. DATE
1
2
3

PROJECT NAME
FINAL PLAT

PROJECT ADDRESS
CACTUS RD & REEMS RD
SURPRISE, ARIZONA
85379

PROJECT AREA
CACTUS RD & REEMS RD

HELIX JOB NUMBER
613

IN HOUSE
DRAWN BY: MTH
CHECKED BY: MT

SHEET TITLE
A FINAL PLAT FOR A PORTION OF THE SW 1/4 OF SEC 17 T3N, R1W, G. & S.R.B. & M.

SHEET 2 OF 3

PLOT SCALE 1:1 @ 24"x36", 1:2.2 @ 11"x17"

FS22-1093 FINAL PLAT

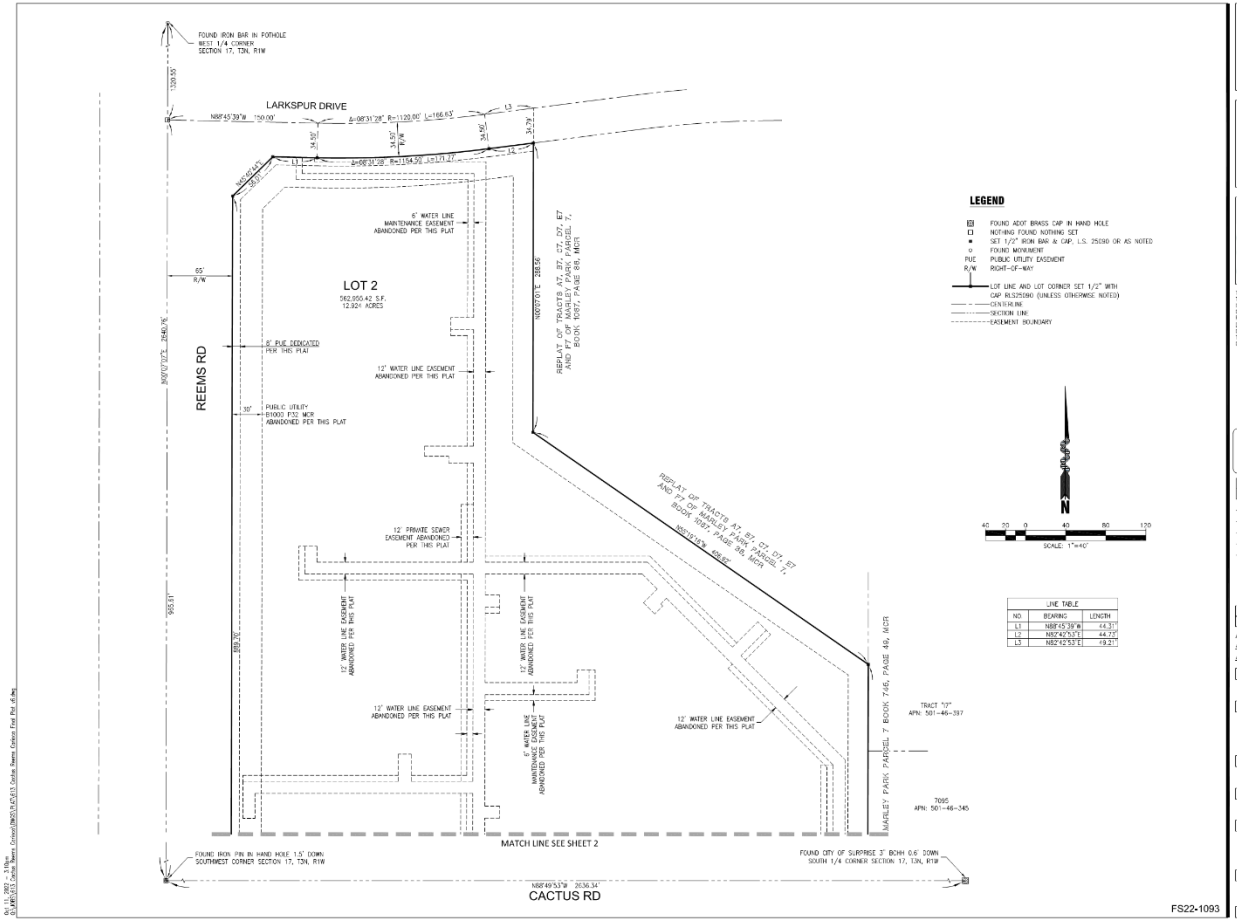

Helix Engineering, LLC
Engineering / Surveying / Consulting
3240 E Union Hills
Suite 113
Phoenix AZ 85050
(P) 602-788-2616
www.Jones.com

THIS DRAWING IS COPYRIGHTED AND IS THE SOLE PROPERTY OF THE OWNER. IT IS PRODUCED SOLELY FOR USE BY THE OWNER AND ITS AFFILIATES. REPRODUCTION OR USE OF THIS DRAWING AND/OR THE INFORMATION CONTAINED IN IT IS FORBIDDEN WITHOUT THE WRITTEN PERMISSION OF THE OWNER.

TWO WORKING DAYS BEFORE YOU DIG, CALL FOR THE BLUE STAKES
1-800-782-5348
BLUE STAKE CENTER

REVISIONS	
NO.	DATE
1	
2	
3	

PROJECT NAME
FINAL PLAT

PROJECT ADDRESS
CACTUS RD & REEMS RD
SURPRISE, ARIZONA
85379

PROJECT AREA
CACTUS RD & REEMS RD

HELIX JOB NUMBER: 613
IN HOUSE
DRAWN BY: MRM
CHECKED BY: MJT

SHEET TITLE
A FINAL PLAT FOR A PORTION OF THE SW 1/4 OF SEC 17 T3N, R1W, G. & S.R.B. & M.

SHEET: 3 OF 3

PLOT SCALE: 1:1 @ 24"x36", 1:2.2 @ 11"x17"

FS22-1093 FINAL PLAT

SURPRISE
ARIZONA

QUESTIONS OR COMMENTS?

Thank You

CITY OF SURPRISE
Regular City Council Meeting

Council Meeting Date: January 17, 2023 Contact Person: Chris Sexton
Submitting Department: Community Development District: District 1
Staff Recommendations:

Consent: Yes Regular: No Public Hearing: No Report/Discussion: No

Agenda Wording:
Consideration and action pertaining to the Final Plat entitled,"Heritage Asante – Parcel 7" and received November 30, 2022, a property generally located north of Grand Avenue and west of Pat Tillman alignment; Case FS22-1268.

Motion:
I move to approve the Final Plat entitled, "Heritage Asante – Parcel 7" and received November 30, 2022.

Background:
The subject request involves a Final Plat for Heritage Asante Parcel 7. The proposed Final Plat includes the subdivision of the 18.5 acre parcel of Heritage Asante into 88 single-family lots, for a density of 4.74 DU/Ac.

Objective Analysis:
The subject Final Plat meets the requirements of the Paradiso Asante PUD, in addition to other requirements as set forth in the Surprise Municipal Code. All city reviewing departments have reviewed the request and expressed no concerns.

Policy Compliant:
The Final Plat is consistent with the Paradiso Asante PUD and achieves the goals and policies of the General Plan.

Financial Impact:
While this item does not have an immediate or direct financial impact, ongoing development activity in the City will inevitably have a future financial impact as additional resources are needed to provide city services.

Budget Impact:
There is no anticipated budget impact related to this item.

FTE Impact:

This item does not have an impact on current staffing levels.

ATTACHMENTS:

1. 00 - FS22-1268 Heritage Asante Parcel 7 Final Plat - Staff Report
2. 01 - FS22-1268 Heritage Asante Parcel 7 Final Plat - Vicinity Map
3. 02 - FS22-1268 Heritage Asante Parcel 7 Final Plat - Zoning Map
4. 03 - FS22-1268 Heritage Asante Parcel 7 Final Plat - Final Plat
5. 04 - FS22-1268 - Heritage Asante Parcel 7 Final Plat - Landscape Plan - PowerPoint
6. 05 - FS22-1268 - Heritage Asante Parcel 7 Final Plat - Wall Plan - PowerPoint
7. 06 - FS22-1268 - Heritage Asante Parcel 7 Final Plat - Wall Details - PowerPoint
8. 07 - FS22-1268 Heritage Asante Parcel 7 Final Plat - Luke AFB Comments
9. FS22-1268 - Heritage Asante Parcel 7 Final Plat - PowerPoint

---

SURPRISE
ARIZONA

FINAL PLAT

REPORT TO CITY COUNCIL

Case:	**FS22-1268**
Project Name:	Heritage Asante Parcel 7 – Final Plat
Council District:	1 - Acacia
City Council Date:	**January 17, 2023**
Planner:	Chris Sexton, Planner II
Owner:	DRP AZ 5, LLC
Applicant:	Diego Ortiz with Hilgart Wilson, LLC
Request:	Final Plat for 88 single-family residential lots
Site Location:	Generally located north of Grand Avenue and west of Pat Tillman alignment
Site Size:	18.57 gross acres
Gross Density:	4.74 Du/Ac
General Plan Conformance:	The proposal is consistent with the Surprise General Plan 2035

PROJECT DESCRIPTION:

Hilgart Wilson, LLC, on behalf of DRP AZ 5, LLC requests approval of a Final Plat to allow for the development of a single-family residential subdivision on Parcel 7 of Heritage Asante, an active adult community generally located west of 163rd Avenue and north of Grand Avenue. Parcel 7 encompasses 18.5 gross acres and will include 88 lots.

SURROUNDING LAND ZONING:

The following map depicts the existing zoning of the subject site and its surrounds:

BACKGROUND:

November 3, 1988: A portion of the Asante Planned Area Development was annexed into the City of Surprise by the Mayor and City Council.

October 14, 2004: Another portion of the Asante Planned Area Development was annexed into the City of Surprise by the Mayor and City Council.

November 24, 2004: The Mayor and City Council approved the Asante Planned Area Development.

July 27, 2006: The Asante North Planned Area Development was annexed into the City of Surprise by the Mayor and City Council.

July 27, 2006: The Mayor and City Council approved the Asante North Planned Area Development.

September 19, 2017: The Mayor and City Council approved the Rezone of the subject property for the Asante Paradiso Active Adult Community.

April 16, 2018: The Community Development Director approved a minor zoning amendment to revise the development standards for the subject site under case FS18-078.

February 18, 2022: The Community Development Director approved a minor zoning amendment to revise the development standards for the subject site under case FS21-1002.

September 9, 2022: The applicant applied for the subject final plat under case FS22-1268.

October 6, 2022: Planning & Zoning Commission approved the Preliminary Plat under case FS22-0717.

ANALYSIS AND DISCUSSION:

The subject request involves a Final Plat for Parcel 7 of Heritage Asante (Paradiso Asante), a 369.2 acre active adult community. Pursuant to the PUD, the density for Parcel 7 is 4.5 dwelling units per acre and the density count is 85 lots however, there is the ability to allow density transfers within the PUD. The allowable adjustment in the PUD regarding the parcel area for density and lot yield is +/- 10% provided that the overall yield of 1,566 dwelling units in the Heritage Asante (Paradiso Asante) PUD is not exceeded. A retention area that was planned for Parcel 7 is incorporated into Parcel 8 (Tract D of Parcel 8, case FS22-0590) thereby Parcel 8 yielded 23 less dwelling units and with the +/- 10 adjustment, Parcel 7 is able to develop three (3) additional lots for a total of 88 lots.

The final plat includes 88 single-family residential lots located within 18.57 net acres of Parcel 7. This equates to a density of 4.74 dwelling units per acre. The average lot size in Parcel 7 is 5,104 square feet, with minimum dimensions of 43.5' x 100'. Below is the development standards table for Parcel 7.

DEVELOPMENT STANDARDS TABLE – PER HERITAGE ASANTE PUD, FS21-1002, OR SUBSEQUENT AMENDMENTS	
ZONING	RM-9 PUD
TYPICAL LOT	43.5' X 100'
MIN. AREA	4,752
MIN. WIDTH	43.5'
MIN. DEPTH	100'
BUILDING SETBACKS (2)	
FRONT (2)	20/12' FOR LIVING AREA OR SIDE ENTRY GARAGE (6)
SIDE (2)	0'/5'
STREET SIDE (2)(3)	13'
REAR (2)	15'
REAR ADJ. TO ARTERIAL (2)(7)(8)	20'
MIN. DISTANCE BETWEEN HOUSES	0'/10'
BLDG. HEIGHT	30'
LOT COVERAGE	50%

Access
Primary access to Parcel 7 will be 175th Lane via Freedom Way and will have connections to Parcel 8 and Parcel 10.

Landscape
This parcel includes 3.97 acres (21.37%) of open space, which includes areas for recreation and trail connections to the overall Heritage Asante development. Of that, 0.91 acres will be active open space and 3.06 acres will be passive open space. Residents of this subdivision also have access to the community pool and amenities in Parcel 4 of this development. Additional landscape and retention basins also contribute to the total open space.

Walls
The wall plans for Parcel 7 are consistent with the remainder of the Heritage Asante Development, as are the colors and materials for the theme walls, view fencing, builder walls, and columns.

Conformance with Adopted Plans:

The Surprise General Plan 2035 shows the subject property as lying within the Neighborhood Character Area, which supports residential development of up to 8 DU/AC or more.

Reviewing Agencies:

In addition to the standard city reviewing agencies, who indicate no objections to the requests, Luke Air Force Base, Maricopa Water District, and Maricopa County Department of Transportation (MCDOT) were included in the routing of this case. These agencies also indicate no objections.

Summary:

The proposed Final Plat meets the requirements of the Asante Paradiso PUD, the Surprise Municipal Code, and the General Plan.

Findings:

- The proposed Final Plat is consistent with the Heritage Asante PUD.
- The proposed Final Plat is consistent with the applicable City of Surprise regulations.
- The reviewing agencies have indicated no objections to the request.

Attachments:

01 Vicinity Map
02 Zoning Map
03 Final Plat
04 Landscape Plan
05 Wall Plan
06 Wall Details
07 Luke AFB Comments

FS22-1268 VICINITY MAP
DESERT OASIS
RIO RANCHO
HAPPY VALLEY RD
PAT TILLMAN BLVD
163RD AVE
SITE
18.5 ac
GRAND AVE
ASANTE
ASANTE BLVD
AUSTIN RANCH

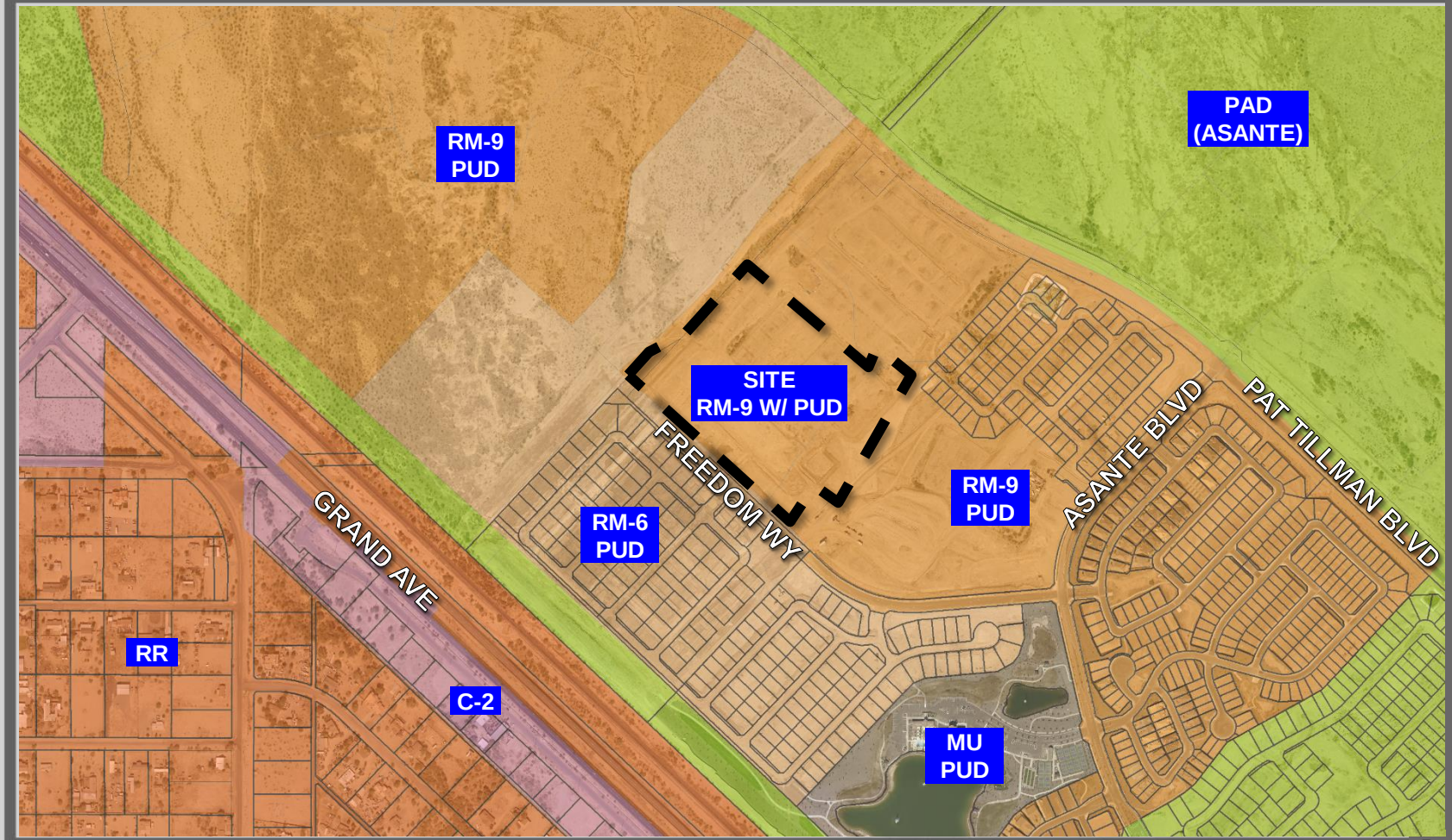

FS22-1268 ZONING MAP

FINAL PLAT
OF
HERITAGE ASANTE - PARCEL 7
SURPRISE, ARIZONA
A PORTION OF THE NORTH HALF OF SECTION 11 AND THE SOUTH HALF OF SECTION 2, TOWNSHIP 4 NORTH, RANGE 2 WEST OF THE GILA AND SALT RIVER MERIDIAN, MARICOPA COUNTY, ARIZONA

DEDICATION

STATE OF ARIZONA)
) SS
COUNTY OF MARICOPA)

KNOW ALL PERSONS BY THESE PRESENTS:
THAT **DRP AZ 5, LLC, A DELAWARE LIMITED LIABILITY COMPANY**, AS OWNER, OF A SUBDIVISION WITHIN THE COUNTY OF MARICOPA, HAS SUBDIVIDED UNDER THE NAME OF **"HERITAGE ASANTE – PARCEL 7"**, BEING WITHIN A PORTION OF THE NORTH HALF OF SECTION 11 AND THE SOUTH HALF OF SECTION 2, TOWNSHIP 4 NORTH, RANGE 2 WEST OF THE GILA AND SALT RIVER MERIDIAN, MARICOPA COUNTY, ARIZONA, AS SHOWN AND PLATTED HEREON AND DOES HEREBY PUBLISH THIS PLAT AS AND FOR THE PLAT OF SAID **"HERITAGE ASANTE – PARCEL 7"** AND DECLARES THAT THIS PLAT SETS FORTH THE LOCATION AND GIVES THE DIMENSIONS OF EACH LOT, TRACT, STREET, AND EASEMENTS CONSTITUTING SAME, AND THAT EACH LOT, TRACT, STREET, AND EASEMENT SHALL BE KNOWN BY THE NUMBER, LETTER, AND/OR NAME GIVEN TO EACH RESPECTIVELY AS SHOWN ON THIS PLAT.

TRACT A IS HEREBY DECLARED AS PRIVATE ACCESSWAY TO BE OWNED AND MAINTAINED BY **HERITAGE ASANTE COMMUNITY ASSOCIATION, AN ARIZONA NON-PROFIT CORPORATION.** AN EASEMENT FOR PUBLIC WATER AND SEWER, REFUSE COLLECTION, DRAINAGE AND EMERGENCY AND SERVICE TYPE VEHICLE ACCESS IS HEREBY DEDICATED TO THE PUBLIC OVER TRACT A.

OWNER HEREBY GRANTS TO THE PUBLIC A PERPETUAL NON-EXCLUSIVE EASEMENT IN, UPON, OVER, UNDER, THROUGH, AND ACROSS THE AREAS DESIGNATED AS PUBLIC UTILITY EASEMENTS AS SHOWN ON THE PLAT FOR THE PURPOSE OF ACCESSING, INSTALLING, CONSTRUCTING, MAINTAINING, REPAIRING, REPLACING AND UTILIZING PUBLIC UTILITIES.

OWNER HEREBY GRANTS TO THE CITY OF SURPRISE A PERPETUAL NON-EXCLUSIVE EASEMENT OVER, UNDER, UPON AND ACROSS ALL AREAS DESIGNATED ON THE PLAT AS WATER/SEWER LINES, MANHOLES, FIRE HYDRANTS AND WATER METERS FOR THE PURPOSE OF INSTALLING, CONSTRUCTING, MAINTAINING, REPAIRING, REPLACING AND UTILIZING THE WATER/SEWER LINES, MANHOLES, FIRE HYDRANTS AND WATER METERS.

OWNER HEREBY GRANTS TO THE CITY OF SURPRISE A PERPETUAL NON-EXCLUSIVE EASEMENT OVER, UPON AND ACROSS THE AREAS DESIGNATED AS SIGHT VISIBILITY TRIANGLES FOR THE PURPOSE OF ENSURING THAT THESE AREAS REMAIN FREE OF SIGHT VISIBILITY OBSTRUCTIONS.

OWNER HEREBY GRANTS TO THE UNITED STATES OF AMERICA DEPARTMENT OF THE AIR FORCE ("USAF") AN AVIGATION EASEMENT OVER AND ACROSS THIS PLAT AND EVERY LOT AND PARCEL THEREOF, WHICH EASEMENT SHALL INCLUDE, BUT NOT BE LIMITED TO, THE RIGHT OF FLIGHT OF AIRCRAFT OVER THIS PLAT, TOGETHER WITH ITS ATTENDANT NOISE, VIBRATIONS, FUMES, DUST, FUEL AND LUBRICANT PARTICLES, AND ALL OTHER EFFECTS THAT MAY BE CAUSED BY THE OPERATION OF AIRCRAFT LANDING AT, OR TAKING OFF FROM, OR OPERATING AT OR ON LUKE AIR FORCE BASE AND AUXILIARY FIELD.

OWNER HEREBY GRANTS TO THE CITY OF SURPRISE A PERPETUAL CROSS ACCESS EASEMENT ACROSS THE PLAT INCLUDING ROADS AND STREETS, OPEN SPACES, COMMUNITY FACILITIES, TRACTS, SIDEWALKS, DRAINAGE BASINS AND ANY PROPERTY WITHIN THE PLAT OWNED BY THE HOMEOWNERS ASSOCIATION FOR THE PURPOSES OF PROVIDING CONTINUOUS AND UNINTERRUPTED INGRESS AND EGRESS FOR EMERGENCY VEHICLES.

OWNER HEREBY GRANTS TO THE CITY OF SURPRISE A PERPETUAL EASEMENT ACROSS THE PLAT INCLUDING ROADS AND STREETS, OPEN SPACES, COMMUNITY FACILITIES, TRACTS, SIDEWALKS, DRAINAGE BASINS AND ANY PROPERTY WITHIN THE PLAT OWNED BY THE HOMEOWNERS ASSOCIATION FOR THE PURPOSE OF PROVIDING CONTINUOUS AND UNINTERRUPTED INGRESS AND EGRESS FOR TRASH COLLECTION VEHICLES.

OWNER HEREBY GRANTS TO THE CITY OF SURPRISE AN ODOR EASEMENT OVER, UPON AND ACROSS THIS PLAT AND EVERY LOT AND PARCEL THEREOF, WHICH EASEMENT SHALL INCLUDE, BUT NOT BE LIMITED TO, THE RIGHT TO INVADE WITH ODORS, FUMES, SMELLS, AND PHYSICAL AIRBORNE PARTICULATES CAUSED BY THE OPERATION AND MAINTENANCE OF THE CITY'S WATER RECLAMATION FACILITIES.

ALL IMPROVEMENTS, FOR STREETS AND PUBLIC UTILITIES OWNED AND OPERATED BY THE CITY, INSTALLED OR CONSTRUCTED BY OWNER WITHIN THE PUBLIC RIGHTS-OF-WAY, THE EASEMENTS, OR ANY TRACTS OR PARCELS HEREBY DEDICATED TO THE CITY OF SURPRISE SHALL BE DEEMED TO HAVE BEEN DEDICATED BY OWNER TO THE CITY UPON THEIR COMPLETION; HOWEVER, SUCH TRANSFER SHALL NOT OCCUR UNTIL THE CITY COUNCIL FOR THE CITY OF SURPRISE MANIFESTS ITS ACCEPTANCE BY SEPARATE FORMAL COUNCIL ACTION.

THE EASEMENTS GRANTED WITHIN THIS DEDICATION ARE PERMANENT AND PERPETUAL AND SHALL RUN WITH THE LAND AND BE BINDING UPON OWNER AND ITS HEIRS, ASSIGNS, AND SUCCESSORS IN INTEREST TO THIS PLAT OR ANY PARCEL OR LOT THEREOF.

OWNER HEREBY GRANTS TO THE PUBLIC AN EASEMENT FOR RECREATION OVER, UPON, AND ACROSS THOSE AREAS DESIGNATED AS RECREATION TRAILS OR AREAS FOR THE PURPOSE OF ALLOWING THE PUBLIC ACCESS TO THE TRAIL SYSTEM.

IN WITNESS WHEREOF:

DRP AZ 5, LLC, A DELAWARE LIMITED LIABILITY COMPANY, AS OWNER, HAS HEREUNTO CAUSED ITS CORPORATE NAME TO BE SIGNED AND ITS CORPORATE SEAL TO BE AFFIXED BY THE UNDERSIGNED, DULY AUTHORIZED OFFICER THIS _____ DAY OF _____, 2022.

DRP AZ 5, LLC, A DELAWARE LIMITED LIABILITY COMPANY

BY: DW GENERAL PARTNER, LLC

ITS: MANAGER

BY: _____

NAME: _____

ITS: AUTHORIZED SIGNATORY

ACKNOWLEDGMENT

STATE OF _____)
) SS
COUNTY OF _____)

ON THIS, THE ____ DAY OF _____ 2022, BEFORE ME APPEARED, _____
WHO ACKNOWLEDGED TO BE THE AUTHORIZED SIGNATORY OF **DW GENERAL PARTNER, LLC**, AS MANAGER OF **DRP AZ 5, LLC, A DELAWARE LIMITED LIABILITY COMPANY**, AND ACKNOWLEDGED THAT HE, AS SUCH AUTHORIZED SIGNATORY, BEING DULY AUTHORIZED SO TO DO, EXECUTED THE FOREGOING INSTRUMENT FOR THE PURPOSES CONTAINED THEREIN.

IN WITNESS WHEREOF:

I HEREUNTO SET MY HAND AND OFFICIAL SEAL:

_____ _____
NOTARY PUBLIC MY COMMISSION EXPIRES

COMMUNITY ASSOCIATION RATIFICATION

BY THIS RATIFICATION, _____, AS _____ OF **HERITAGE ASANTE COMMUNITY ASSOCIATION, AN ARIZONA NON-PROFIT CORPORATION**, ACKNOWLEDGES THE RESPONSIBILITIES DEDICATED HEREIN.

BY: _____

TITLE: _____

PRINTED NAME: _____

ACKNOWLEDGMENT FOR RATIFICATION

STATE OF ARIZONA)
) SS
COUNTY OF MARICOPA)

ON THIS, THE _____ DAY OF _____, 2022, BEFORE ME, PERSONALLY APPEARED _____
WHO ACKNOWLEDGED HIMSELF/HERSELF TO BE THE _____ OF THE ASSOCIATION AND ACKNOWLEDGED THAT HE/SHE AS _____ BEING DULY AUTHORIZED TO DO SO, EXECUTED THE FOREGOING INSTRUMENT FOR THE PURPOSE CONTAINED HEREIN, BY SIGNING IN THE NAME OF THE ASSOCIATION, BY HIMSELF/HERSELF AS, _____.

IN WITNESS WHEREOF, I HEREBY SET MY HAND AND OFFICIAL SEAL:

BY: _____ DATE_____

LEGAL DESCRIPTION

A PORTION OF LAND LOCATED WITHIN THE NORTH HALF OF SECTION 11 AND THE SOUTH HALF OF SECTION 2, TOWNSHIP 4 NORTH, RANGE 2 WEST OF THE GILA AND SALT RIVER MERIDIAN, MARICOPA COUNTY, ARIZONA, BEING MORE PARTICULARLY DESCRIBED AS FOLLOWS:
COMMENCING AT A FOUND MARICOPA COUNTY ALUMINUM CAP ACCEPTED AS THE EAST QUARTER CORNER OF SAID SECTION 11 FROM WHICH A FOUND MARICOPA COUNTY ALUMINUM CAP ACCEPTED AS THE SOUTHEAST CORNER OF SAID SECTION 11 THEREOF BEARS SOUTH 00°43'44" WEST, 2644.11 FEET;
THENCE NORTH 00°42'32" EAST, 2644.68 FEET ALONG THE EAST LINE OF THE NORTHEAST QUARTER OF SAID SECTION 11 TO THE NORTHEAST CORNER, POSITION CALCULATED PER RESULTS OF SURVEY RECORDED IN BOOK 679, PAGE 19, MARICOPA COUNTY RECORDS, ARIZONA;
THENCE NORTH 89°28'08" WEST, 2159.56 FEET ALONG THE NORTH LINE OF SAID NORTHEAST QUARTER;
THENCE LEAVING SAID NORTH LINE, NORTH 00°31'52" EAST, 441.34 FEET TO THE **POINT OF BEGINNING;**
THENCE SOUTH 21°53'08" WEST, 633.17 FEET;
THENCE SOUTH 38°59'53" WEST, 11.77 FEET TO A NON-TANGENT CURVE, CONCAVE SOUTHWESTERLY, HAVING A RADIUS OF 620.00 FEET, THE CENTER OF WHICH BEARS SOUTH 38°59'53" WEST;
THENCE NORTHWESTERLY ALONG SAID CURVE, THROUGH A CENTRAL ANGLE OF 07°13'24", AN ARC LENGTH OF 78.16 FEET TO A NON-TANGENT LINE;
THENCE SOUTH 31°46'29" WEST, 40.00 FEET;
THENCE SOUTH 73°12'11" WEST, 26.98 FEET TO A NON-TANGENT CURVE, CONCAVE SOUTHEASTERLY, HAVING A RADIUS OF 55.00 FEET, THE CENTER OF WHICH BEARS SOUTH 62°56'04" EAST;
THENCE SOUTHWESTERLY ALONG SAID CURVE, THROUGH A CENTRAL ANGLE OF 12°16'09", AN ARC LENGTH OF 11.78 FEET TO THE BEGINNING OF A REVERSE CURVE, CONCAVE NORTHWESTERLY, HAVING A RADIUS OF 55.00 FEET;
THENCE SOUTHWESTERLY ALONG SAID CURVE, THROUGH A CENTRAL ANGLE OF 80°07'56", AN ARC LENGTH OF 76.92 FEET TO A NON-TANGENT LINE;
THENCE SOUTH 43°17'04" WEST, 133.06 FEET;
THENCE THE FOLLOWING TWO (2) COURSES ALONG THE NORTHERLY RIGHT OF WAY LINE OF WEST FREEDOM WAY AS RECORDED IN THE FINAL PLAT OF HERITAGE ASANTE – PARCEL 6 PHASE 1 PER BOOK 1562, PAGE 39, MARICOPA COUNTY RECORDS, ARIZONA:
THENCE NORTH 46°42'56" WEST, 530.61 FEET;
THENCE SOUTH 43°17'04" WEST, 60.00 FEET;
THENCE LEAVING SAID NORTHERLY RIGHT OF WAY LINE, NORTH 46°42'56" WEST, 542.70 FEET ALONG THE NORTHERLY PROPERTY LINE OF HERITAGE ASANTE PARCEL 6 PHASE 2 AS RECORDED IN BOOK 1563, PAGE 27, MARICOPA COUNTY RECORDS, ARIZONA;
THENCE LEAVING SAID NORTHERLY PROPERTY LINE, NORTH 43°17'04" EAST, 133.15 FEET TO THE BEGINNING OF A TANGENT CURVE, CONCAVE SOUTHEASTERLY, HAVING A RADIUS OF 300.00 FEET;
THENCE NORTHEASTERLY ALONG SAID CURVE, THROUGH A CENTRAL ANGLE OF 16°32'14", AN ARC LENGTH OF 86.59 FEET TO A TANGENT LINE;
THENCE NORTH 59°49'18" EAST, 256.33 FEET TO THE BEGINNING OF A TANGENT CURVE, CONCAVE NORTHWESTERLY, HAVING A RADIUS OF 500.00 FEET;
THENCE ALONG SAID CURVE, THROUGH A CENTRAL ANGLE OF 16°32'14", AN ARC LENGTH OF 144.31 FEET TO A TANGENT LINE;
THENCE NORTH 43°17'04" EAST, 198.93 FEET;
THENCE SOUTH 46°42'56" EAST, 726.92 FEET;
THENCE NORTH 21°53'08" EAST, 12.88 FEET TO THE BEGINNING OF A TANGENT CURVE, CONCAVE NORTHWESTERLY, HAVING A RADIUS OF 55.00 FEET;
THENCE NORTHEASTERLY ALONG SAID CURVE, THROUGH A CENTRAL ANGLE OF 17°20'29", AN ARC LENGTH OF 16.65 FEET TO THE BEGINNING OF A REVERSE CURVE, CONCAVE SOUTHEASTERLY, HAVING A RADIUS OF 55.00 FEET;
THENCE NORTHEASTERLY ALONG SAID CURVE, THROUGH A CENTRAL ANGLE OF 124°40'58", AN ARC LENGTH OF 119.69 FEET TO THE BEGINNING OF A REVERSE CURVE, CONCAVE NORTHEASTERLY, HAVING A RADIUS OF 55.00 FEET;
THENCE SOUTHEASTERLY ALONG SAID CURVE, THROUGH A CENTRAL ANGLE OF 17°20'29", AN ARC LENGTH OF 16.65 FEET TO A TANGENT LINE;
THENCE SOUTH 68°06'52" EAST, 63.21 FEET TO THE **POINT OF BEGINNING.**

FLOOD ZONE DESIGNATION

THE FOLLOWING FLOOD PLAIN DESIGNATION AND ASSOCIATED COMMENTS ARE COPIED DIRECTLY FROM THE FEDERAL EMERGENCY MANAGEMENT AGENCY (FEMA) WEBSITE. HILGARTWILSON, LLC AND THE UNDERSIGNED REGISTERED PROFESSIONAL LAND SURVEYOR MAKE NO STATEMENT AS TO THE ACCURACY OR COMPLETENESS OF THE FOLLOWING FLOOD ZONE DESIGNATION STATEMENT.

THE PROPERTY IS LOCATED WITHIN AN AREA HAVING FLOOD ZONE "X" BY THE FEDERAL EMERGENCY MANAGEMENT AGENCY, ON FLOOD INSURANCE RATE MAP NO. 04013C1210L, WITH A DATE OF IDENTIFICATION OF OCTOBER 16, 2013, FOR COMMUNITY NO. 040053, IN MARICOPA COUNTY, STATE OF ARIZONA, WHICH IS THE CURRENT FLOOD INSURANCE RATE MAP FOR THE COMMUNITY IN WHICH SAID PROPERTY IS SITUATED.

BASIS OF BEARING

BASIS OF BEARING IS SOUTH 00°43'44" WEST ALONG THE EAST LINE OF THE SOUTHEAST QUARTER OF SECTION 11, TOWNSHIP 4 NORTH, RANGE 2 WEST OF THE GILA AND SALT RIVER MERIDIAN, MARICOPA COUNTY, ARIZONA, AS SHOWN ON THE MASTER PLAT, RECORDED IN BOOK 1452, PAGE 20, MARICOPA COUNTY RECORDERS.

100 YEAR ASSURED WATER SUPPLY

THE AREA PLATTED HEREON LIES WITHIN THE DOMESTIC WATER SERVICE AREA OF THE CITY OF SURPRISE WHICH IS DESIGNATED AS HAVING AN ASSURED WATER SUPPLY PURSUANT TO A.R.S. § 45-576.

OWNER

DRP AZ 5, LLC
1665 W ALAMEDA DR., SUITE 130
TEMPE, AZ 85282
PHONE: (480) 332-6674
CONTACT: JOAN SCARBROUGH

SURVEYOR

HILGARTWILSON, LLC
2141 E. HIGHLAND AVE., STE. 250
PHOENIX, ARIZONA 85016
PHONE: (602) 490-0535
CONTACT: KIRK J. PANGUS, RLS

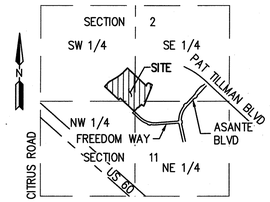

VICINITY MAP

NOT TO SCALE
T4N, R2W

SHEET INDEX

FP01	COVER SHEET
FP02	SHEET INDEX MAP, NOTES, LOT/TRACT AREA TABLE & VISIBILITY DETAIL
FP03–FP06	FINAL PLAT

PUBLIC NOTICE:

THE LOTS DEPICTED ON THIS PLAT ARE LOCATED WITHIN THE VICINITY OF LUKE AIR FORCE BASE AND MAY BE SUBJECT TO OVERFLIGHTS BY JET AIRCRAFT. ALL STRUCTURES WITHIN THIS PLAT SHALL BE CONSTRUCTED IN COMPLIANCE WITH THE SOUND ATTENUATION STANDARDS ADOPTED BY THE CITY OF SURPRISE. A MAP DEPICTING THE MOST CURRENT ADOPTED MAG NOISE CONTOURS IN RELATION TO THIS PLAT SHALL BE DISPLAYED IN ALL SALES OFFICES. ADDITIONAL INFORMATION MAY BE OBTAINED BY CONTACTING THE CITY OF SURPRISE COMMUNITY DEVELOPMENT DEPARTMENT.

RELEASE OF LIABILITY

DRP AZ 5, LLC, A DELAWARE LIMITED LIABILITY COMPANY, ("OWNER"), DOES HEREBY (1) RELEASE AND DISCHARGE THE UNITED STATES OF AMERICA DEPARTMENT OF THE AIR FORCE (USAF) AND THE CITY OF SURPRISE, AND (2) INDEMNIFY, DEFEND, AND HOLD HARMLESS THE USAF AND THE CITY OF SURPRISE, OF AND FROM ANY LIABILITY FOR ANY AND ALL CLAIMS FOR DAMAGES OF ANY KIND TO PERSONS OR PROPERTY THAT MAY ARISE AT ANY TIME IN THE FUTURE OVER, OR IN CONNECTION WITH AIRCRAFT OVERFLIGHTS FROM AIRCRAFT UTILIZING LUKE AIR FORCE BASE, WHETHER SUCH DAMAGE SHALL ORIGINATE FROM NOISE, VIBRATION, FUMES, DUST, FUEL AND LUBRICANT PARTICLES, AND ALL OTHER EFFECTS THAT MAY BE CAUSED BY THE OPERATION OF AIRCRAFT LANDING AT, OR TAKING OFF FROM, OR OPERATING AT OR ON LUKE AIR FORCE BASE AND ITS AUXILIARY FIELDS. THIS INSTRUMENT SHALL RUN WITH THE LAND AND BE BINDING UPON OWNER AND ITS HEIRS, ASSIGNS, AND SUCCESSORS IN INTEREST TO THIS PLAT OR ANY PARCEL OR LOT THEREOF. THIS INSTRUMENT DOES NOT RELEASE THE USAF FROM LIABILITY FOR DAMAGE OR INJURY TO PERSON OR PROPERTY CAUSED BY FALLING AIRCRAFT OR FALLING PHYSICAL OBJECTS FROM AIRCRAFT, EXCEPT AS STATED HEREIN WITH RESPECT TO NOISE, FUMES, DUST, FUEL, AND LUBRICANT PARTICLES.

DRP AZ 5, LLC, A DELAWARE LIMITED LIABILITY COMPANY, ("OWNER"), DOES HEREBY (1) RELEASE AND DISCHARGE THE CITY OF SURPRISE, AND (2) INDEMNIFY, DEFEND, AND HOLD HARMLESS THE CITY OF SURPRISE, OF AND FROM ANY LIABILITY FOR ANY AND ALL CLAIMS FOR DAMAGES OF ANY KIND TO PERSONS OR PROPERTY THAT MAY ARISE AT ANY TIME IN THE FUTURE OVER, OR IN CONNECTION WITH THE AREAS LOCATED WITHIN THE NEWLY DEDICATED RIGHT-OF-WAY AS DEPICTED ON THIS PLAT UNTIL SUCH TIME THE RIGHT-OF-WAY IS IMPROVED TO CITY STANDARDS AND THOSE IMPROVEMENTS ARE APPROVED AND ACCEPTED BY THE CITY COUNCIL. THE MAINTENANCE OF THE AREA WITHIN ANY NEWLY DEDICATED RIGHT-OF-WAY AS SHOWN ON THIS PLAT SHALL BE THE RESPONSIBILITY OF THE ADJACENT OWNER/OR SUBSEQUENT ADJACENT OWNERS WITHIN THE BOUNDARY OF SAID PLAT UNTIL SUCH TIME THAT THE AREA WITHIN THE RIGHT-OF-WAY IS IMPROVED TO CITY STANDARD AND ACCEPTED BY THE CITY OF SURPRISE.

THE CITY OF SURPRISE AGREES TO INDEMNIFY **DRP AZ 5, LLC, A DELAWARE LIMITED LIABILITY COMPANY,** ITS OFFICERS, EMPLOYEES, AGENTS, CONTRACTORS, OR THOSE OF ITS SUCCESSORS AND ASSIGNS FOR ANY AND ALL DIRECT DAMAGES TO THE PERSONAL PROPERTY OR FOR PHYSICAL INJURY TO OR DEATH OF PERSONS OCCURRING ON THE AREA OF THIS EASEMENT CAUSED BY OR ARISING SOLELY FROM THE NEGLIGENT, WILLFUL, MALICIOUS, OR GROSSLY NEGLIGENT CONDUCT OF THE CITY OF SURPRISE, ITS OFFICERS, EMPLOYEES, AGENTS, CONTRACTORS, OR THOSE OF ITS SUCCESSORS AND ASSIGNS THAT WAS THE DIRECT CAUSE OF THE DAMAGE, INJURY OR DEATH.

OWNER HEREBY FURTHER AGREES TO INDEMNIFY, DEFEND, AND HOLD HARMLESS THE CITY OF SURPRISE FROM ANY AND ALL CLAIMS FOR DAMAGES OF ANY KIND TO PERSONS OR PROPERTY LOCATED WITHIN THE RIGHT OF WAY THAT MAY ARISE IN CONNECTION WITH THE USE OF THE SIDEWALKS LOCATED WITHIN THE RIGHT-OF-WAY, UNTIL SUCH TIME THE CITY OF SURPRISE HAS ACCEPTED THE SIDEWALKS.

CITY OF SURPRISE ENGINEER APPROVAL:

DATA ON THIS PLAT REVIEWED AND APPROVED THIS_____ DAY OF _____, 2022, BY THE CITY ENGINEER OF SURPRISE, ARIZONA.

APPROVED_____
CITY ENGINEER

CITY OF SURPRISE COUNCIL APPROVAL:

APPROVED BY THE CITY COUNCIL OF THE CITY OF SURPRISE, ARIZONA. THIS _____ DAY OF _____, 2022.

_____
MAYOR

ATTEST:

_____
CITY CLERK

CERTIFICATION

THIS IS TO CERTIFY THAT THE SURVEY AND SUBDIVISION OF THE PREMISES DESCRIBED AND PLATTED HEREON WAS MADE UNDER MY DIRECTION DURING THE MONTH OF MARCH 2022; THAT THE SURVEY IS TRUE AND COMPLETE AS SHOWN; THAT THE EXTERIOR BOUNDARY MONUMENTS SHOWN ACTUALLY EXIST OR WILL BE SET AS SHOWN; THAT THEIR POSITIONS ARE CORRECTLY SHOWN; AND THAT SAID MONUMENTS ARE SUFFICIENT TO ENABLE THIS SURVEY TO BE RETRACED.

KIRK J. PANGUS
RLS 19344
HILGARTWILSON, LLC
2141 E. HIGHLAND AVE., STE. 250
PHOENIX, ARIZONA 85016
P: 602.490.0535
kpangus@hilgartwilson.com

REGISTERED LAND SURVEYOR
CERTIFICATE NO.
19344
KIRK J.
PANGUS
Date Signed 11-30-22
ARIZONA, U.S.A.

NOTE:
A.R.S. 32-151 STATES THAT THE USE OF THE WORD "CERTIFY" OR "CERTIFICATION" BY A PERSON OR FIRM THAT IS REGISTERED OR CERTIFIED BY THE BOARD IS AN EXPRESSION OF PROFESSIONAL OPINION REGARDING FACTS OR FINDINGS THAT ARE SUBJECT OF THE CERTIFICATION AND DOES NOT CONSTITUTE AN EXPRESS OR IMPLIED WARRANTY OR GUARANTEE.

HILGARTWILSON
ENGINEER | PLAN | SURVEY | MANAGE
2141 E. HIGHLAND AVE., STE. 250 | P: 602.490.0535 / F: 602.368.2436
PHOENIX, AZ 85016 | www.hilgartwilson.com

HERITAGE ASANTE - PARCEL 7
SURPRISE, ARIZONA
FINAL PLAT

© Copyright 2022, HILGARTWILSON, LLC – This document is the sole property of HILGARTWILSON, LLC.

STATUS:
PROJ. NO.: 1909
DATE: NOV 2022
SCALE: NONE
DRAWN: GS
APPROVED: KJP
MUNICIPAL TRACKING NO:

DWG. NO.
FP01
SHT. 1 OF 6

U:\1900\1909\SURVEY\PLAT\HERITAGE ASANTE\PARCEL 7\1909-HA-P7-FP01.dwg 11/30/2022 10:38 AM

FS22-1268

LOT TABLE		
LOT NO.	AREA (SQ.FT)	AREA (ACRES)
LOT : 1	6464	0.1484
LOT : 2	5390	0.1237
LOT : 3	4770	0.1095
LOT : 4	4770	0.1095
LOT : 5	4770	0.1095
LOT : 6	4770	0.1095
LOT : 7	4770	0.1095
LOT : 8	4770	0.1095
LOT : 9	4770	0.1095
LOT : 10	4770	0.1095
LOT : 11	5249	0.1205
LOT : 12	5199	0.1194
LOT : 13	4770	0.1095
LOT : 14	4770	0.1095
LOT : 15	4770	0.1095
LOT : 16	4770	0.1095
LOT : 17	4770	0.1095
LOT : 18	4770	0.1095
LOT : 19	4770	0.1095
LOT : 20	4770	0.1095
LOT : 21	4770	0.1095
LOT : 22	7083	0.1626

LOT TABLE		
LOT NO.	AREA (SQ.FT)	AREA (ACRES)
LOT : 23	6911	0.1587
LOT : 24	4904	0.1126
LOT : 25	4878	0.1120
LOT : 26	4846	0.1112
LOT : 27	4911	0.1127
LOT : 28	4974	0.1142
LOT : 29	5006	0.1149
LOT : 30	5006	0.1149
LOT : 31	5005	0.1149
LOT : 32	6097	0.1400
LOT : 33	7534	0.1730
LOT : 34	6337	0.1455
LOT : 35	4981	0.1143
LOT : 36	5071	0.1164
LOT : 37	4936	0.1133
LOT : 38	4773	0.1096
LOT : 39	4770	0.1095
LOT : 40	4770	0.1095
LOT : 41	4770	0.1095
LOT : 42	4720	0.1084
LOT : 43	4720	0.1084
LOT : 44	4770	0.1095

LOT TABLE		
LOT NO.	AREA (SQ.FT)	AREA (ACRES)
LOT : 45	4770	0.1095
LOT : 46	4770	0.1095
LOT : 47	4770	0.1095
LOT : 48	4770	0.1095
LOT : 49	5719	0.1313
LOT : 50	5661	0.1300
LOT : 51	4994	0.1146
LOT : 52	4916	0.1128
LOT : 53	4884	0.1121
LOT : 54	4923	0.1130
LOT : 55	5191	0.1192
LOT : 56	6196	0.1422
LOT : 57	4849	0.1113
LOT : 58	4796	0.1101
LOT : 59	4770	0.1095
LOT : 60	4770	0.1095
LOT : 61	4770	0.1095
LOT : 62	4720	0.1084
LOT : 63	4720	0.1084
LOT : 64	4770	0.1095
LOT : 65	4770	0.1095
LOT : 66	4783	0.1098

LOT TABLE		
LOT NO.	AREA (SQ.FT)	AREA (ACRES)
LOT : 67	5969	0.1370
LOT : 68	6057	0.1391
LOT : 69	4935	0.1133
LOT : 70	4817	0.1106
LOT : 71	5532	0.1270
LOT : 72	5919	0.1359
LOT : 73	5036	0.1156
LOT : 74	4778	0.1097
LOT : 75	5003	0.1148
LOT : 76	5851	0.1343
LOT : 77	7522	0.1727
LOT : 78	7372	0.1692
LOT : 79	5542	0.1272
LOT : 80	4945	0.1135
LOT : 81	4945	0.1135
LOT : 82	4995	0.1147
LOT : 83	4995	0.1147
LOT : 84	4995	0.1147
LOT : 85	4995	0.1147
LOT : 86	4995	0.1147
LOT : 87	4858	0.1115
LOT : 88	5188	0.1191

NOTES

1. NO PERMANENT STRUCTURE OF ANY KIND SHALL BE CONSTRUCTED ON, OVER OR PLACED WITHIN EASEMENTS. IT SHALL BE FURTHER UNDERSTOOD THAT THE CITY OF SURPRISE SHALL NOT BE REQUIRED TO REPLACE ANY OBSTRUCTIONS OR PLANTING THAT MUST BE REMOVED DURING THE COURSE OF MAINTENANCE, CONSTRUCTION, OR RECONSTRUCTION OF CITY UTILITIES.
2. ALL NEW OR RELOCATED UTILITIES WILL BE PLACED UNDERGROUND.
3. ALL STRUCTURES AND LANDSCAPING WITHIN THE 30'x30' VISIBILITY TRIANGLE ALONG THE PROPERTY LINES AT LOT CORNERS SHALL BE MAINTAINED AT A MAXIMUM HEIGHT OF 30" ABOVE GROUND LEVEL. (SEE DETAIL THIS SHEET)
4. ALL EXTERIOR SUBDIVISION BOUNDARY CORNERS ARE AS SHOWN PER THIS PLAT IN CONFORMANCE WITH ARIZONA STATUTE. ALL INTERIOR CORNERS AND MONUMENTS ARE TO BE SET BY THE SURVEYOR RESPONSIBLE FOR THE CONSTRUCTION SURVEY AND STAKING OF THIS PROJECT AND MUST BE IN CONFORMANCE WITH SAID ARIZONA STATUTORY REQUIREMENTS.
5. PROVISIONS SHALL BE MADE FOR DEVELOPMENT AND MAINTENANCE OF STREET LIGHTS THROUGH EITHER THE ASSOCIATION OR THROUGH THE CREATION OF A STREET LIGHT IMPROVEMENT DISTRICT (S.L.I.D.).
6. NO ON-SITE GRADING OR EXCAVATION SHALL OCCUR WITHOUT FIRST OBTAINING A PERMIT FROM THE CITY OF SURPRISE.
7. IN ACCORDANCE WITH ARS § 9-461.07, THE CITY OF SURPRISE HAS DETERMINED THAT ALL DEDICATIONS OCCURRING WITH THIS PLAT ARE IN CONFORMANCE WITH THE SURPRISE GENERAL PLAN.
8. PURSUANT TO A.R.S. § 42-11102, THE CITY OF SURPRISE, A POLITICAL SUBDIVISION OF THE STATE OF ARIZONA, IS EXEMPT FROM ALL TAXES AND ASSESSMENTS BASED ON ASSESSED VALUE EXCEPT FOR SPECIAL DISTRICTS # 14751 AND 14710, WHEN APPLICABLE.
9. THE ROADS DESIGNATED AS "PRIVATE" AND ANY APPURTENANCES INCLUDING BUT NOT LIMITED TO ROAD SIGNS, STRIPING, CURB AND GUTTER, AND SIDEWALKS ARE PRIVATE; SUCH ROADS AND APPURTENANCES ARE OWNED, MAINTAINED AND REPAIRED BY OWNER OR HOMEOWNER'S ASSOCIATION FORMED BY OWNER. THE CITY OF SURPRISE SHALL NOT MAINTAIN OR REPAIR ANY ROAD DESIGNATED AS "PRIVATE."
10. THE MAINTENANCE OF LANDSCAPING WITHIN THE OPEN SPACES, LANDSCAPED TRACTS, RETENTION BASINS, AND PARKS SHALL BE THE RESPONSIBILITY OF THE OWNER OR THE HOMEOWNERS' ASSOCIATION FORMED BY THE OWNER.
11. THE MAINTENANCE OF LANDSCAPING WITHIN THE ADJACENT PUBLIC RIGHTS-OF-WAY, INCLUDING LANDSCAPED MEDIANS WITHIN COLLECTORS AND LOCAL STREETS, AND LANDSCAPED AREAS BETWEEN THE CURB AND THE DETACHED SIDEWALK, SHALL BE THE RESPONSIBILITY OF THE ADJACENT PROPERTY OWNER OR THE HOMEOWNERS' ASSOCIATION FORMED BY THE ADJACENT PROPERTY.
12. LANDSCAPING MAINTENANCE OF THE MEDIANS WITHIN THE PUBLIC RIGHT-OF-WAY WITHIN ANY ARTERIAL OR PARKWAY STREET CLASSIFICATION SHALL BE RESPONSIBILITY OF THE CITY OF SURPRISE AFTER ACCEPTANCE.
13. TOTAL NUMBER OF LOTS = 88
14. DEVELOPMENT STANDARDS ARE PER THE CITY OF SURPRISE ZONING CASE FS17-010 OR AS SUBSEQUENTLY AMENDED.
15. THIS FINAL PLAT IS IN SUBSTANTIAL CONFORMANCE WITH THE PRELIMINARY PLAT APPROVED BY THE CITY OF SURPRISE UNDER CASE FS21-0717

SITE SUMMARY TABLE		
OVERALL GROSS AREA	809,149 SQ.FT.	18.5755 AC.
OVERALL NET AREA	626,584 SQ.FT.	14.3844 AC.
TOTAL NUMBER OF LOTS: SINGLE FAMILY	88	
TOTAL LOT AREA	453,693 SQ.FT.	10.4154 AC.
TOTAL TRACTS (B-M)	172,891 SQ.FT.	3.9690 AC.
TOTAL NET PERCENTAGE OF OPEN SPACE (%)	21.37	
TRACT A	182,565 SQ.FT.	4.1911 AC.
AVERAGE LOT SIZE (SF)	4,752	
MINIMUM LOT WIDTH (FT)	43.5'	
MINIMUM LOT DEPTH (FT)	100'	
DENSITY (DU/AC): PER GROSS AREA	4.74	

TRACT TABLE		
TRACT	AREA (ACRES)	USE
TRACT A	4.1911	PRIVATE ACCESSWAY, WATER & SEWER EASEMENT
TRACT B	0.0226	COMMON AREA
TRACT C	0.0209	COMMON AREA
TRACT D	0.0472	COMMON AREA
TRACT E	0.6106	COMMON AREA
TRACT F	1.4823	COMMON AREA & DRAINAGE
TRACT G	0.0418	COMMON AREA
TRACT H	1.3800	COMMON AREA & DRAINAGE
TRACT I	0.1755	COMMON AREA
TRACT J	0.0418	COMMON AREA
TRACT K	0.0220	COMMON AREA
TRACT L	0.0220	COMMON AREA
TRACT M	0.1022	COMMON AREA

1. COMMON AREAS MAY INCLUDE OPEN SPACE, LANDSCAPING, PEDESTRIAN PATHS AND/OR AMENITIES.
2. SPECIFIC EASEMENTS THAT ARE BEING DEDICATED AS PART OF THIS PLAT ARE FULLY DELINEATED ON THE FOLLOWING SHEETS.
3. THE USES SHOWN IN THE TRACT TABLE ABOVE DO NOT INTEND TO GRANT EASEMENTS THAT ARE BLANKET IN NATURE OVER THE ENTIRE TRACT.

DEVELOPMENT STANDARDS TABLE - PER HERITAGE ASANTE PUD, FS21-1002, OR SUBSEQUENT AMENDMENTS	
ZONING	RM-9 PUD
TYPICAL LOT	43.5' X 100'
MIN. AREA	4,752
MIN. WIDTH	43.5'
MIN. DEPTH	100'
BUILDING SETBACKS	
FRONT	20/12' FOR LIVING AREA OR SIDE ENTRY GARAGE
SIDE	0'/5'
STREET SIDE	13'
REAR	15'
REAR ADJ. TO ARTERIAL	20'
MIN. DISTANCE BETWEEN HOUSES	0'/10'
BLDG. HEIGHT	30'
LOT COVERAGE	50%

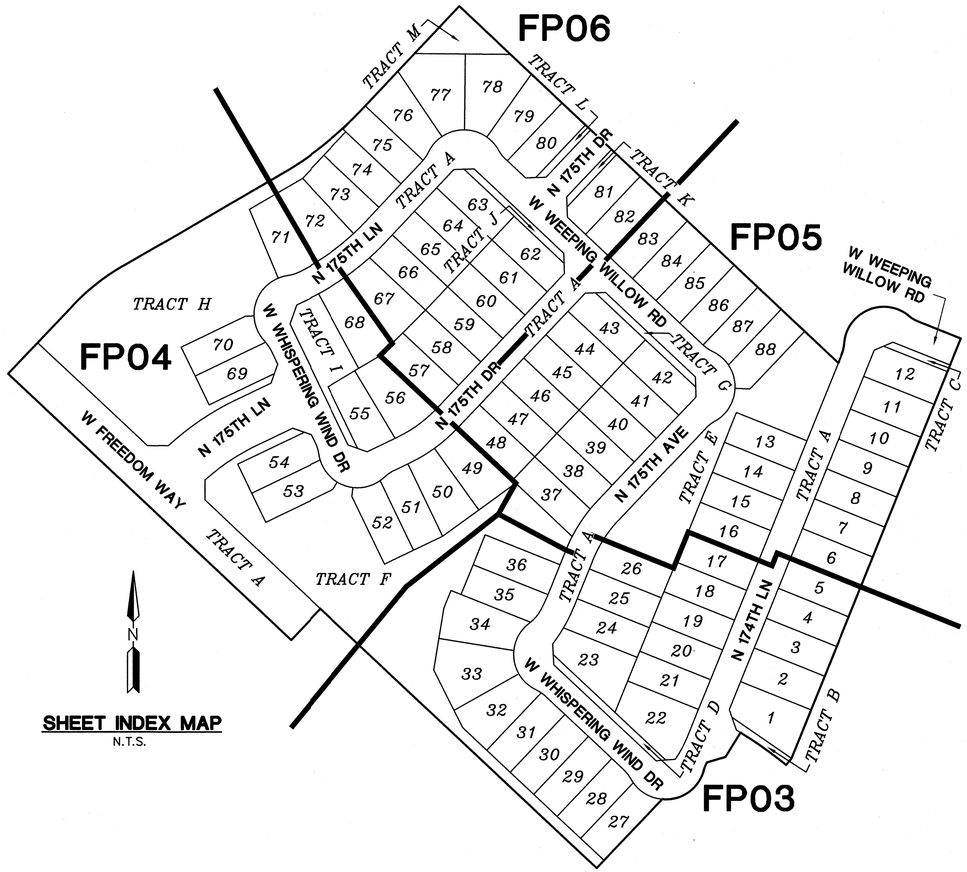

N

SHEET INDEX MAP
N.T.S.

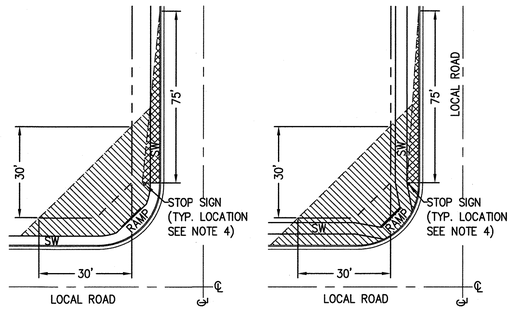

LOCAL STREET
SIGHT VISIBILITY TRIANGLES

CITY OF SURPRISE SUPPLEMENTAL ENGINEERING DEVELOPMENT STANDARDS DETAILS FOR PUBLIC CONSTRUCTION: DETAIL NO. 4-02
SEE DETAIL NO. 4-01 SIGHT DISTANCE REQUIREMENTS FOR ARTERIAL & COLLECTOR STREETS

NOTES:

1. SIGNS, FENCES, WALLS, UTILITY BOXES, STRUCTURES, SHRUBS, HEDGES OR OTHER PLANTS, BUT EXCLUDING TREES OVER 30 INCHES IN HEIGHT SHALL NOT BE PERMITTED WITHIN THE RESTRICTED AREAS.
2. PLANTING WITHIN THE R/W IN VIEW EASEMENTS SHALL BE PER THE APPROVED TYPES AND DIMENSIONS AND SHALL NOT ENCROACH WITHIN THE SIGHT TRIANGLE PER AASHTO GUIDELINES.
3. TREES ARE PERMITTED WITHIN THE RESTRICTED AREAS PROVIDED:
   A. NO LIMBS, LEAVES, NEEDLES OR OTHER FOLIAGE ABOVE 30 INCHES OR BELOW 84 INCHES ARE PERMITTED.
   B. TREES SHALL NOT OBSTRUCT MORE THAN 20% OF THE VISIBILITY WHEN COMBINED WITH OTHER OBSTRUCTIONS PRESENT.
4. STOP SIGN SHALL BE INSTALLED AT 2' MINIMUM BEHIND BACK OF CURB.

UNOBSTRUCTED VIEW EASEMENT AREA (SEE NOTE #3)

NO VEGETATION OVER 30 INCHES IN HEIGHT

REGISTERED LAND SURVEYOR
CERTIFICATE NO.
19344
KIRK J.
PANGUS
Date Signed 11/30/22
Revised 4-6-23

U:\1900\1909\SURVEY\PLAT\HERITAGE ASANTE\PARCEL 7\1909-HA-P7-FP02.dwg 11/30/2022 10:38 AM

HILGARTWILSON
ENGINEER | PLAN | SURVEY | MANAGE
2141 E. HIGHLAND AVE. STE. 250 | P: 602.490.0535 / F: 602.368.2436
PHOENIX, AZ 85016 www.hilgartwilson.com

HERITAGE ASANTE - PARCEL 7
SURPRISE, ARIZONA
FINAL PLAT

STATUS:
PROJ. NO.:1909
DATE: NOV 2022
SCALE: NONE
DRAWN: GS
APPROVED: KJP
MUNICIPAL TRACKING NO:

© Copyright 2022, HILGARTWILSON, LLC - This document is the sole property of HILGARTWILSON, LLC.

DWG. NO.
FP02
SHT. 2 OF 6

FS22-1268

LINE TABLE		
LINE NO.	DIRECTION	LENGTH
L1	S38°59'53"W	11.77'
L2	S31°46'29"W	40.00'
L3	S73°12'11"W	26.98'
L8	N18°57'01"W	30.26'
L9	N85°05'47"E	26.67'
L10	N03°18'18"W	29.06'

CURVE TABLE			
CURVE NO.	RADIUS	DELTA	LENGTH
C1	620.00'	7°13'24"	78.16'
C2	55.00'	12°16'09"	11.78'
C3	55.00'	80°07'56"	76.92'
C8	55.00'	17°26'57"	16.75'
C9	55.00'	17°22'06"	16.67'
C10	55.00'	117°15'53"	112.57'
C11	55.00'	24°17'58"	23.33'
C24	600.00'	4°09'36"	43.56'
C25	200.00'	24°15'32"	84.68'
C26	200.00'	26°30'15"	92.52'
C27	200.00'	21°23'56"	74.70'

LEGEND

- FOUND MONUMENT AS NOTED
- FOUND BRASS CAP IN HAND HOLE
- FOUND BRASS CAP FLUSH
- SET 1/2" REBAR W/ CAP, RLS 19344 OR AS NOTED
- CENTERLINE MONUMENT
- BOUNDARY LINE
- SECTION LINE
- CENTER LINE
- RIGHT OF WAY
- PARCEL LINE
- EASEMENT LINE
- PUE — PUBLIC UTILITY EASEMENT
- VNAE — VEHICLE NON-ACCESS EASEMENT
- MCR — MARICOPA COUNTY RECORDS
- RLS — REGISTERED LAND SURVEYOR
- APN — ASSESSOR PARCEL NUMBER
- DOC. — DOCUMENT
- NO. — NUMBER
- P.O.B. — POINT OF BEGINNING
- P.O.C. — POINT OF COMMENCEMENT
- ① — 30X30 SIGHT VISIBILITY TRIANGLE EASEMENTS

MATCH SHEET 4

MATCH SHEET 5

MATCH SHEET 5

TRACT F

TRACT F

TRACT A (PRIVATE ACCESSWAY)

TRACT A (PRIVATE ACCESSWAY)

TRACT A (PRIVATE ACCESSWAY)

TRACT D

TRACT F

TRACT B

N 175TH AVE

N 174TH LN

W WHISPERING WIND DR

NORTH QUARTER CORNER SECTION 11, TOWNSHIP 4 NORTH, RANGE 2 WEST, NOTHING FOUND POSITION CALCULATED PER RESULTS OF SURVEY BOOK 679, PAGE 19, MCR

NORTHEAST CORNER SECTION 11, TOWNSHIP 4 NORTH, RANGE 2 WEST NOTHING FOUND POSITION CALCULATED PER RESULTS OF SURVEY BOOK 679, PAGE 19, MCR

EAST QUARTER CORNER SECTION 11, TOWNSHIP 4 NORTH, RANGE 2 WEST FOUND MARICOPA COUNTY ALUMINUM CAP W/ SECTION CORNER MARKINGS & RLS 35832 (BENT LOCATED WHERE GOES IN GROUND) P.O.C.

N00°42'32"E 2644.68'

SOUTHEAST CORNER SECTION 11, TOWNSHIP 4 NORTH, RANGE 2 WEST FOUND MARICOPA COUNTY ALUMINUM CAP STAMPED W/ SECTION CORNER MARKINGS & RLS 35832

S00°43'44"W 2644.11' (BASIS OF BEARING)

SOUTH QUARTER CORNER SECTION 11, TOWNSHIP 4 NORTH, RANGE 2 WEST FOUND 2" ALUMINUM CAP, BENT, STAMPED "MARICOPA COUNTY 1/4 S11 S10 RLS" DATED 2003

HERITAGE ASANTE PARCEL 6 PHASE 1 BOOK 1562, PAGE 39, MCR

DRP AZ 5 LLC APN: 502-72-771G DOC. NO. 2022-0455004, MCR

8' PUE PER BOOK 1562, PAGE 39, MCR

SCALE: 1" = 30'

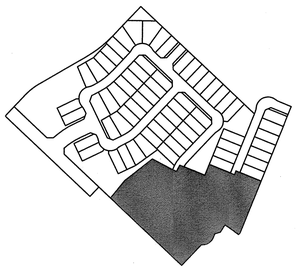

HILGARTWILSON
ENGINEER | PLAN | SURVEY | MANAGE
2141 E. HIGHLAND AVE. STE. 250 | P: 602.490.0535 / F: 602.368.2436
PHOENIX, AZ 85016 www.hilgartwilson.com

HERITAGE ASANTE - PARCEL 7

SURPRISE, ARIZONA

FINAL PLAT

© Copyright 2022, HILGARTWILSON, LLC – This document is the sole property of HILGARTWILSON, LLC.

PROJ. NO.: 1909
STATUS:
DATE: NOV 2022
SCALE: AS SHOWN
MUNICIPAL TRACKING NO:
DRAWN: GS
APPROVED: KJP

DWG. NO.
FP03
SHT. 3 OF 6

U:\1900\1909\SURVEY\PLAT\HERITAGE ASANTE\PARCEL 7\1909-HA-P7-FP03.dwg 11/30/2022 10:39 AM

FS22-1268

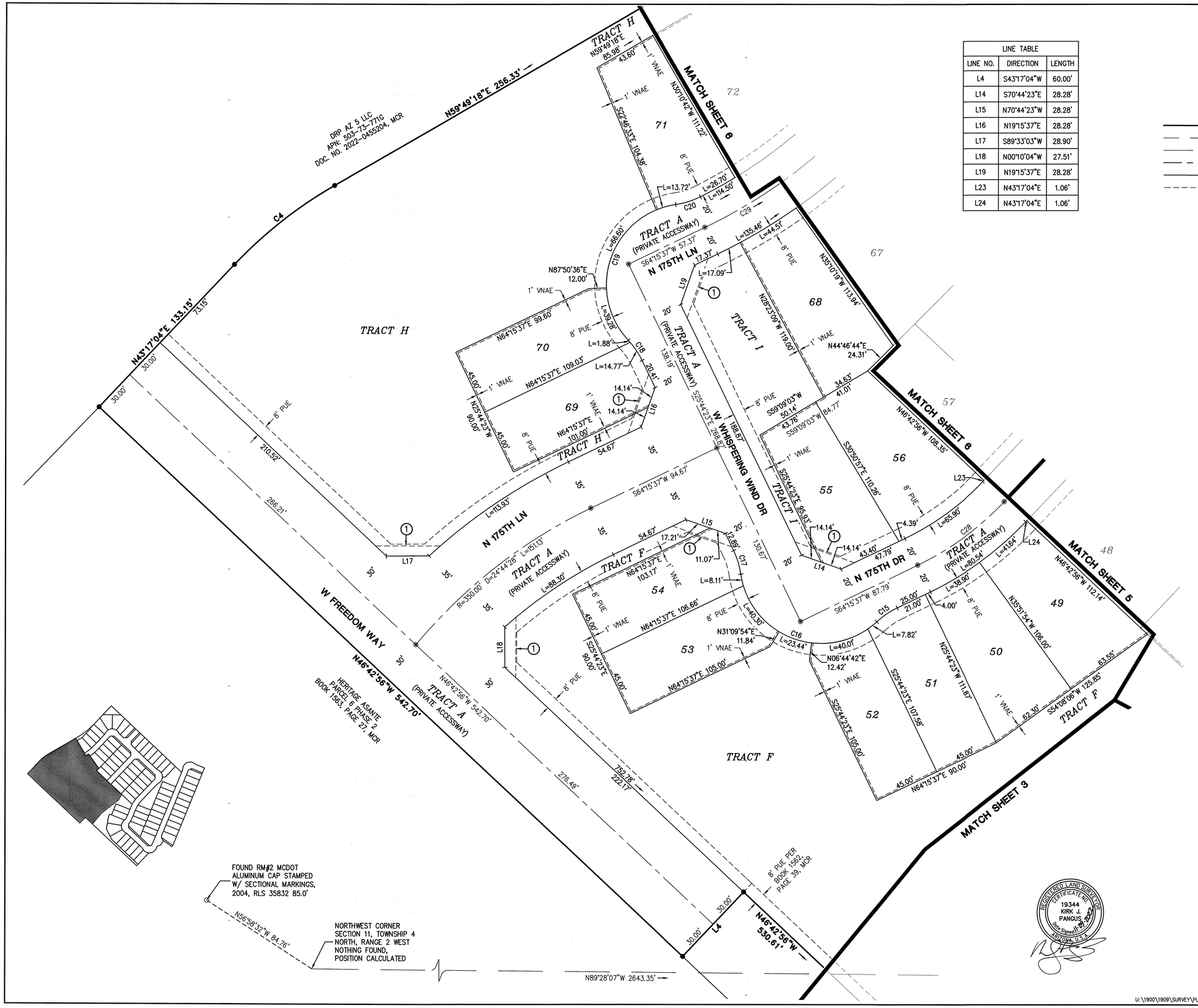

LINE TABLE		
LINE NO.	DIRECTION	LENGTH
L4	S43°17'04"W	60.00'
L14	S70°44'23"E	28.28'
L15	N70°44'23"W	28.28'
L16	N19°15'37"E	28.28'
L17	S89°33'03"W	28.90'
L18	N00°10'04"W	27.51'
L19	N19°15'37"E	28.28'
L23	N43°17'04"E	1.06'
L24	N43°17'04"E	1.06'

LEGEND

- FOUND MONUMENT AS NOTED
- FOUND BRASS CAP IN HAND HOLE
- FOUND BRASS CAP FLUSH
- SET 1/2" REBAR W/ CAP, RLS 19344 OR AS NOTED
- CENTERLINE MONUMENT
- BOUNDARY LINE
- SECTION LINE
- CENTER LINE
- RIGHT OF WAY
- PARCEL LINE
- EASEMENT LINE
- PUE — PUBLIC UTILITY EASEMENT
- VNAE — VEHICLE NON-ACCESS EASEMENT
- MCR — MARICOPA COUNTY RECORDS
- RLS — REGISTERED LAND SURVEYOR
- APN — ASSESSOR PARCEL NUMBER
- DOC. — DOCUMENT
- NO. — NUMBER
- P.O.B. — POINT OF BEGINNING
- P.O.C. — POINT OF COMMENCEMENT
- 1 — 30X30 SIGHT VISIBILITY TRIANGLE EASEMENTS

CURVE TABLE			
CURVE NO.	RADIUS	DELTA	LENGTH
C4	300.00'	16°32'14"	86.59'
C15	55.00'	17°20'29"	16.65'
C16	55.00'	124°40'58"	119.69'
C17	55.00'	17°20'29"	16.65'
C18	55.00'	17°20'29"	16.65'
C19	55.00'	124°35'41"	119.60'
C20	55.00'	18°20'56"	17.61'
C28	200.00'	20°58'33"	73.22'
C29	350.00'	20°58'33"	128.13'

N

30 0 30 60
SCALE: 1" = 30'

REGISTERED LAND SURVEYOR
CERTIFICATE NO.
19344
KIRK J.
PANGUS
Date Signed 11-29-2022
ARIZONA, U.S.A.

HILGARTWILSON
ENGINEER | PLAN | SURVEY | MANAGE
2141 E. HIGHLAND AVE. STE. 250 | P: 602.490.0535 / F: 602.368.2436
PHOENIX, AZ 85016 www.hilgartwilson.com

HERITAGE ASANTE - PARCEL 7

SURPRISE, ARIZONA

FINAL PLAT

STATUS:

MUNICIPAL TRACKING NO:

PROJ. NO.: 1909
DATE: NOV 2022
SCALE: AS SHOWN
DRAWN: GS
APPROVED: KJP

DWG. NO.
FP04
SHT. 4 OF 6

© Copyright,2022, HILGARTWILSON, LLC – This document is the sole property of HILGARTWILSON, LLC.

U:\1900\1909\SURVEY\PLAT\HERITAGE ASANTE\PARCEL 7\1909-HA-P7-FP04.dwg 11/30/2022 10:40 AM

FS22-1268

LINE TABLE		
LINE NO.	DIRECTION	LENGTH
L5	N21°53'08"E	12.88'
L6	S68°06'52"E	63.21'
L7	N66°53'08"E	28.28'
L11	N01°42'56"W	28.28'
L12	N88°17'04"E	28.28'

LEGEND

○	FOUND MONUMENT AS NOTED
▣	FOUND BRASS CAP IN HAND HOLE
◎	FOUND BRASS CAP FLUSH
●	SET 1/2" REBAR W/ CAP, RLS 19344 OR AS NOTED
◉	CENTERLINE MONUMENT
———	BOUNDARY LINE
— — —	SECTION LINE
——— — ———	CENTER LINE
——— - - ———	RIGHT OF WAY
———	PARCEL LINE
- - - - - -	EASEMENT LINE
PUE	PUBLIC UTILITY EASEMENT
VNAE	VEHICLE NON-ACCESS EASEMENT
MCR	MARICOPA COUNTY RECORDS
RLS	REGISTERED LAND SURVEYOR
APN	ASSESSOR PARCEL NUMBER
DOC.	DOCUMENT
NO.	NUMBER
P.O.B.	POINT OF BEGINNING
P.O.C.	POINT OF COMMENCEMENT
①	30X30 SIGHT VISIBILITY TRIANGLE EASEMENTS

CURVE TABLE			
CURVE NO.	RADIUS	DELTA	LENGTH
C5	55.00'	17°20'29"	16.65'
C6	55.00'	124°40'58"	119.69'
C7	55.00'	17°20'29"	16.65'
C12	55.00'	17°20'29"	16.65'
C13	55.00'	124°40'58"	119.69'
C14	55.00'	17°20'29"	16.65'
C27	200.00'	21°23'56"	74.70'

MATCH SHEET 6
MATCH SHEET 4
MATCH SHEET 3
N 175TH DR
N 175TH AVE
N 174TH LN
W WEEPING WILLOW RD
TRACT A (PRIVATE ACCESSWAY)
TRACT C
TRACT E
TRACT F
S46°42'56"E 726.92'
DRP AZ 5 LLC APN: 503-73-771G DOC. NO. 2022-0455204, MCR
S21°53'08"W 633.17'
N00°54'06"E 4835.93'
N00°31'52"E 441.34'
N89°28'08"W 2643.09'
2159.56'
P.O.B.

NORTHEAST CORNER SECTION 11, TOWNSHIP 4 NORTH, RANGE 2 WEST NOTHING FOUND POSITION CALCULATED PER RESULTS OF SURVEY BOOK 679, PAGE 19, MCR

SCALE: 1" = 30'

REGISTERED LAND SURVEYOR
CERTIFICATE NO.
19344
KIRK J.
PANGUS
Date Signed 11-30-22
ARIZONA U.S.A.

HILGARTWILSON
ENGINEER | PLAN | SURVEY | MANAGE
2141 E. HIGHLAND AVE., STE. 250 | P: 602.490.0535 | F: 602.368.2436
PHOENIX, AZ 85016 www.hilgartwilson.com

HERITAGE ASANTE - PARCEL 7

SURPRISE, ARIZONA

FINAL PLAT

© Copyright 2022, HILGARTWILSON, LLC – This document is the sole property of HILGARTWILSON, LLC.

PROJ. NO.: 1909	STATUS:
DATE: NOV 2022	
SCALE: AS SHOWN	MUNICIPAL TRACKING NO:
DRAWN: GS	
APPROVED: KJP	

DWG. NO.
FP05
SHT. 5 OF 6

U:\1900\1909\SURVEY\PLAT\HERITAGE ASANTE\PARCEL 7\1909-HA-P7-FP05.dwg 11/30/2022 10:40 AM

FS22-1268

LEGEND

○	FOUND MONUMENT AS NOTED
▣	FOUND BRASS CAP IN HAND HOLE
◎	FOUND BRASS CAP FLUSH
●	SET 1/2" REBAR W/ CAP, RLS 19344 OR AS NOTED
◉	CENTERLINE MONUMENT
———	BOUNDARY LINE
— — —	SECTION LINE
——— — ———	CENTER LINE
——— — — ———	RIGHT OF WAY
———	PARCEL LINE
- - - - - -	EASEMENT LINE
PUE	PUBLIC UTILITY EASEMENT
VNAE	VEHICLE NON-ACCESS EASEMENT
MCR	MARICOPA COUNTY RECORDS
RLS	REGISTERED LAND SURVEYOR
APN	ASSESSOR PARCEL NUMBER
DOC.	DOCUMENT
NO.	NUMBER
P.O.B.	POINT OF BEGINNING
P.O.C.	POINT OF COMMENCEMENT
①	30X30 SIGHT VISIBILITY TRIANGLE EASEMENTS

CURVE TABLE			
CURVE NO.	RADIUS	DELTA	LENGTH
C21	55.00'	17°20'29"	16.65'
C22	55.00'	124°40'58"	119.69'
C23	55.00'	17°20'29"	16.65'
C29	350.00'	20°58'33"	128.13'

LINE TABLE		
LINE NO.	DIRECTION	LENGTH
L13	N01°42'56"W	28.28'
L20	N88°17'04"E	28.28'
L21	S88°17'04"W	28.28'
L22	S01°42'56"E	28.28'

30 0 30 60
SCALE: 1" = 30'

REGISTERED LAND SURVEYOR
CERTIFICATE NO.
19344
KIRK J.
PANGUS
Date Signed
ARIZONA, U.S.A.

HILGARTWILSON
ENGINEER | PLAN | SURVEY | MANAGE
2141 E. HIGHLAND AVE. STE. 250 | P: 602.490.0535 / F: 602.368.2436
PHOENIX, AZ 85016 www.hilgartwilson.com

HERITAGE ASANTE - PARCEL 7
SURPRISE, ARIZONA
FINAL PLAT

PROJ. NO.: 1909
DATE: NOV 2022
SCALE: AS SHOWN
DRAWN: GS
APPROVED: KJP
STATUS:
MUNICIPAL TRACKING NO:

DWG. NO.
FP06
SHT. 6 OF 6

© Copyright 2022, HILGARTWILSON, LLC - This document is the sole property of HILGARTWILSON, LLC.

U:\1900\1909\SURVEY\PLAT\HERITAGE ASANTE\PARCEL 7\1909-HA-P7-FP06.dwg 11/30/2022 10:40 AM

FS22-1268

- Min. Open Space: 10%
- Total Open Space: 21.36% (3.97 Acres)
- Active Open Space: 0.91 Acres – 32%
- Passive Open Space: 3.06 Acres – 77%

Notes:
Sight distance requirements on Arterials and Collectors will adhere to Surprise Detail 4-01. Sight visibility within the unobstructed view easement area and in front of stop signs must meet or exceed requirements in Surprise Details 4-01 and 4-02. Trees, shrubs, and other landscaping are permitted within the sight visibility triangle provided limbs, leaves, needles or other foliage are kept below 30 inches or above 84 inches, per Surprise EDS Detail 4-01.

TREE PLANTING LEGEND

SYMBOL	BOTANICAL/ COMMON NAME	SIZE
	Fraxinus v. 'Rio Grande' ARIZONA ASH	36" BOX STANDARD
	Fraxinus v. 'Rio Grande' ARIZONA ASH	24" BOX STANDARD
	Pinus eldarica MONDEL PINE	24" BOX STANDARD
	Prosopis g. 'Maverick' HONEY MESQUITE	24" BOX STANDARD LOW BRANCH
	Quercus virginiana 'Heritage' HERITAGE LIVE OAK	24" BOX STANDARD

SHRUB PLANTING LEGEND

SYMBOL	BOTANICAL/COMMON NAME	SIZE	MINIMUM SPACING
	DASYLIRION WHEELERI SPOON YUCCA	5 GAL.	5'-0" O.C.
	BOUGAINVILLA 'TORCH GLOW' TORCH GLOW BOUGAINVILLA	5 GAL.	5'-0" O.C.
	BOUTELOUA G. 'BLONDE AMBITION' BLONDE AMBITION GRAMA GRASS	1 GAL.	3'-0" O.C.
	CAESALPINIA PULCHERRIMA MEXICAN BIRD OF PARADISE	5 GAL.	8'-0" O.C.
	EREMOPHILA 'VALENTINE' VALENTINE EMU BUSH	5 GAL.	5'-0" O.C.
	HESPERALOE PARVIFLORA RED YUCCA	5 GAL.	3'-0" O.C.
	LEUCOPHYLLUM LANGMANIAE 'RIO BRAVO' RIO BRAVO SAGE	5 GAL.	5'-0" O.C.
	MUHLENBERGIA C. 'REGAL MIST' BULL GRASS	1 GAL.	3'-0" O.C.
	MYRTUS COMMUNIS MYRTLE	5 GAL.	5'-0" O.C.
	OLEA EUROPAEA 'MONTRA' LITTLE OLLIE DWF OLIVE	5 GAL.	5'-0" O.C.
	PENNISETUM 'HAMELN' DWARF FOUNTAIN GRASS	1 GAL.	3'-0" O.C.
	RUELLIA PENINSULARIS BAJA RUELLIA	5 GAL.	5'-0" O.C.
	TEUCRIUM CHAMAEDRYS 'WALL GERMANDER	1 GAL.	24" O.C.
	TURF MIDIRON SOD		
	DECOMPOSED GRANITE - 'DESERT VERDE 3/" SCREENED (BROWN TO MATCH ADJACENT SUBDIVISIONS)		

SVT = SIGHT VISIBILITY TRIANGLE

IRRIGATION WATER SOURCE: HERITAGE ASANTE MASTER IRRIGATION SYSTEM (RECLAIMED WATER)

TURF PEAK SEASON DEMAND (GDP) = 5,548 gdp
NON-TURF PEAK SEASON DEMAND (GDP) = 8,809 gdp
TOTAL ANNUAL DEMAND = 8.88 AC-FT OR 14,357.36 gallons

TOTAL PROJECT AREA: 777,050 SQ FT (17.8 ACRES)
TOTAL PLANTING AREAS: 180,700 SQ FT (23% OF PROJECT AREA)
TOTAL NON-TURF PLANTING AREA: 173,100 SQ FT
TOTAL TURF AREA : 7,600 SQ FT (4.2% OF PLANTING AREAS)

TOTAL OPEN SPACE:
172,933 SF (3.97 ACRES)

ACTIVE OPEN SPACE: 23%
42,050 SF (0.91 ACRES)

PASSIVE OPEN SPACE: 77%
138,650 SF (3.06 ACRES)

51638
PATRICK C.M. MURPHY
REGISTERED LANDSCAPE ARCHITECT
ARIZONA, U.S.A.

NORTH
SCALE: 1"=80'-0"

SMP
ENVIRONMENTAL DESIGN

HERITAGE ASANTE - PARCEL 7 Preliminary Active vs Passive Areas

DRP AZ 5, LLC | Surprise, AZ | July 15, 2022

SURPRISE CASE #FS22-0717

FS22-1268 LANDSCAPE PLAN

FS22-1268 WALL PLAN

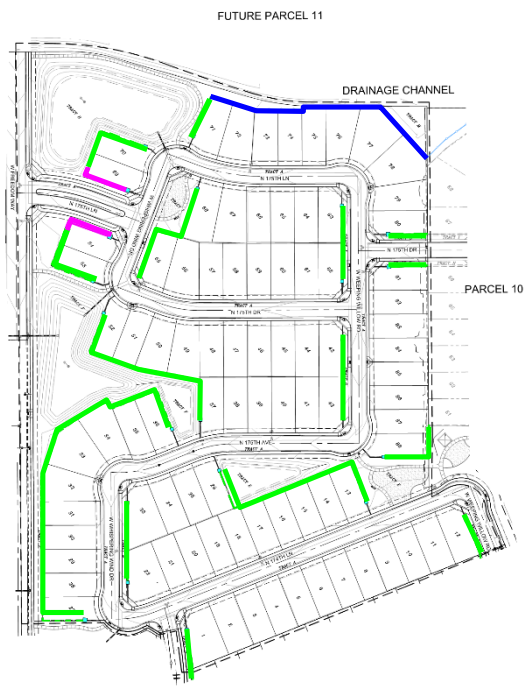

WALL LEGEND

- PROJECT THEME WALL
- THEME WALL PANEL
- THEME PILASTER
- 5' VIEW FENCE

NOTE:
NO WALLS TO BE GREATER THAN 8' INCLUDING THE HEIGHT OF THE RETAINING WALLS.

NOTE:
SIGHT DISTANCE REQUIREMENTS ON ARTERIALS AND COLLECTORS WILL ADHERE TO SURPRISE DETAIL 4-01. SIGHT VISIBILITY WITHIN THE UNOBSTRUCTED VIEW EASEMENT AREA AND IN FRONT OF STOP SIGNS MUST MEET OR EXCEED REQUIREMENTS IN SURPRISE DETAILS 4-01 AND 4-02

RETAINING WALL, SCREEN OR BUILDER WALL MATRIX PA 7

Lot	Exposed Wall Height	Lot	Exposed Wall Height
1	8.0	32	8.0
13	8.0	34	7.0
14	8.0	37	8.0
15	8.0	38	8.0
16	8.0	40	7.1
17	8.0	42	7.5
18	8.0	49	8.0
19	8.0	50	8.0
20	7.0	51	8.0
22	8.0	52	8.0
23	8.0	53	8.0
24	7.1	55	7.4
27	8.0	63	8.0
28	8.0	69	7.3
29	8.0	81	7.1
30	8.0	86	7.1
31	8.0	88	8.0

NORTH
SCALE: 1"=80'-0"

51638
PATRICK C.M. MURPHY
ARIZONA U.S.A.
EXP. 12-31-22

SMP ENVIRONMENTAL DESIGN

HERITAGE ASANTE - PARCEL 7 Preliminary Wall Plan

DRP AZ 5, LLC | Surprise, AZ | July 15, 2022

SURPRISE CASE #FS22-0717

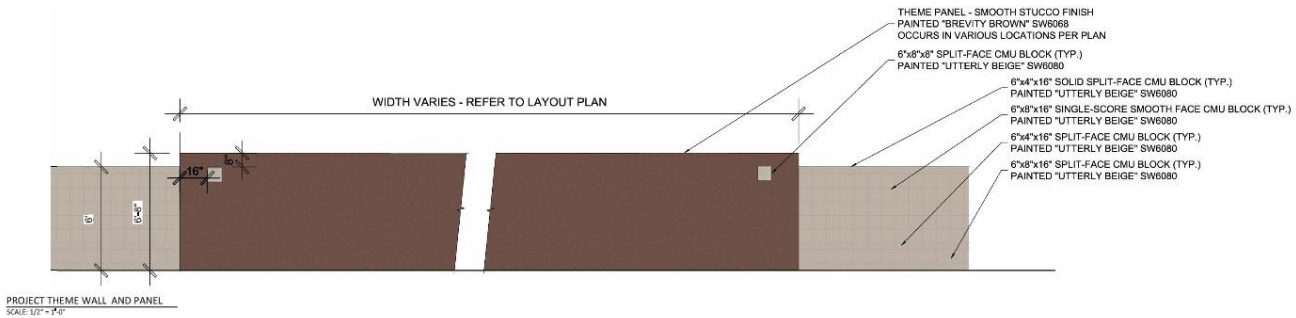

PROJECT THEME WALL AND PANEL
SCALE: 1/2" = 1'-0"

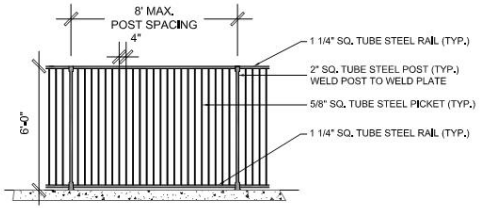

VIEW FENCE
SCALE: 1/2" = 1'-0"

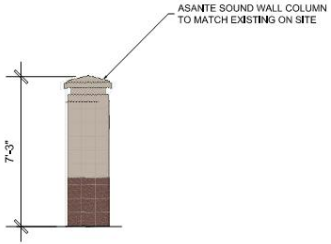

COLUMN DETAIL
SCALE: 1/2" = 1'-0"

NOTE:
NO WALLS TO BE GREATER THAN 8' INCLUDING THE HEIGHT OF THE RETAINING WALLS.

NOTE:
SIGHT DISTANCE REQUIREMENTS ON ARTERIALS AND COLLECTORS WILL ADHERE TO SURPRISE DETAIL 4-01. SIGHT VISIBILITY WITHIN THE UNOBSTRUCTED VIEW EASEMENT AREA AND IN FRONT OF STOP SIGNS MUST MEET OR EXCEED REQUIREMENTS IN SURPRISE DETAILS 4-01 AND 4-02

51638
PATRICK C.M. MURPHY
ARIZONA U.S.A.

SMP
ENVIRONMENTAL DESIGN

HERITAGE ASANTE - Parcel 7

Wall Details

DRP AZ 5, LLC | Surprise, AZ | July 15, 2022

SURPRISE CASE #FS22-0717

FS22-1268 WALL PLAN

DEPARTMENT OF THE AIR FORCE
AIR EDUCATION AND TRAINING COMMAND

21 September 2022

Mr. Christopher P. Toale
Director, Community Initiatives Team
56th Fighter Wing
14185 West Falcon Street
Luke AFB AZ 85309-1629

Ms. Nichole Flores
Development Services Specialist
City of Surprise Planning Department
16000 N. Civic Center Plaza
Surprise AZ 85374

Re: FS22-1268; Heritage Asante Parcel 7 Final Plat (APN: a portion of 503-73-771)

Dear Ms. Flores

Thank you for the opportunity to provide comments on the Final Plat Application for Heritage Asante Parcel 7. The site is located on 18.6 acres of undeveloped land located at Asante Blvd and Freedom Way in Surprise, AZ and is part of the larger 2,105 acre, mixed use Asante North Master Planned Development. This request is to develop 88 single-family homes for an overall density of 4.8 du/ac. The site is located approximately 2.2 miles outside the Luke AFB Auxiliary Field #1 65 DNL, "high noise or accident potential zone." as defined by A.R.S. § 28-8461 and falls inside the "territory in the vicinity of a military airport" also defined by A.R.S. § 28-8461.

In an effort to promote a more compatible co-existence, Luke AFB follows the guidelines in the Graduated Density Concept (GDC). The GDC proposes, in the absence of a more restrictive state, county or municipal general or comprehensive plan, graduating densities away from the 65 DNL as follows: a maximum of 2 du/acre from the 65 DNL to 1/2 mile, a maximum of 4 du/acre from 1/2 to 1 mile, and a maximum of 6 du/acre from 1 to 3 miles. This project with a density of 4.8 du/ac falls within these guidelines.

This request, as stated in the application, will not negatively impact the flying operations at Luke AFB. Since the site is located within the "territory in the vicinity of a military airport," it will be subjected to noise from approximately 165 flights per day, we recommend you review the sound attenuation requirements found in A.R.S. §28-8482. We also encourage an aggressive notification program on the part of the applicant to inform potential residents about Luke AFB operations.

If there are any questions, please contact my Community Planner, Mr. Mark James at (623) 856-9981.

Sincerely

TOALE.CHRISTOPHER.P.1039696165 Digitally signed by TOALE.CHRISTOPHER.P.1039696165 Date: 2022.09.21 13:12:36 -07'00'

CHRISTOPHER P. TOALE

cc:
Colonel Keagan L. McLeese, Vice Commander, 56th Fighter Wing
Mr. Timothy A. Forero, GS-13, General Law Attorney, 56th Fighter Wing

SURPRISE
ARIZONA

Heritage Asante Parcel 7 Final Plat

City Council

January 17, 2023

FS22-1268 VICINITY MAP

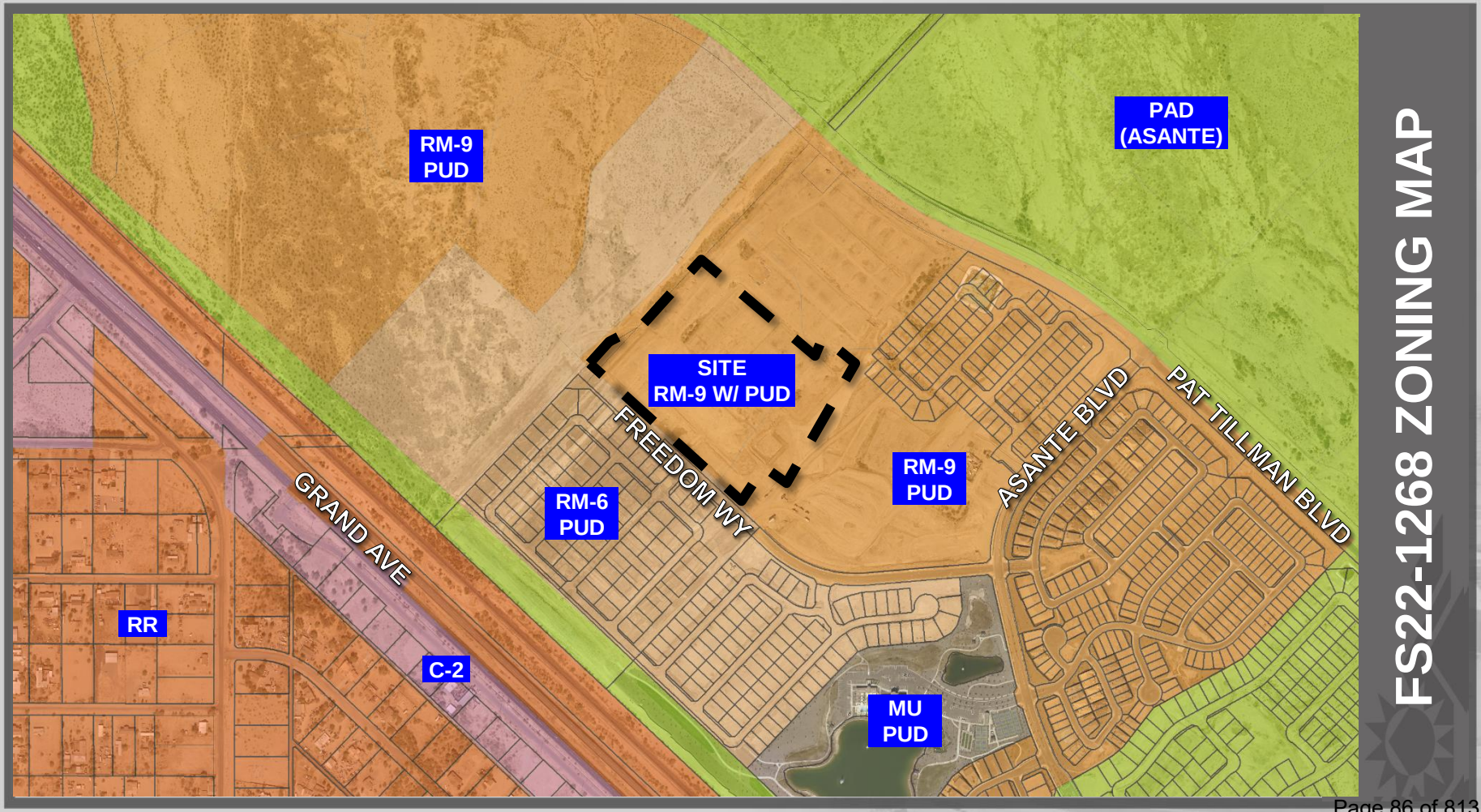

FS22-1268 ZONING MAP

Parcel 7
Area: 18.5 Acres
88 Lots
Project Density: 4.74 DU/Acre
Minimum Open Space: 10%
Provided Open Space: 21.36% (3.97 Acres)

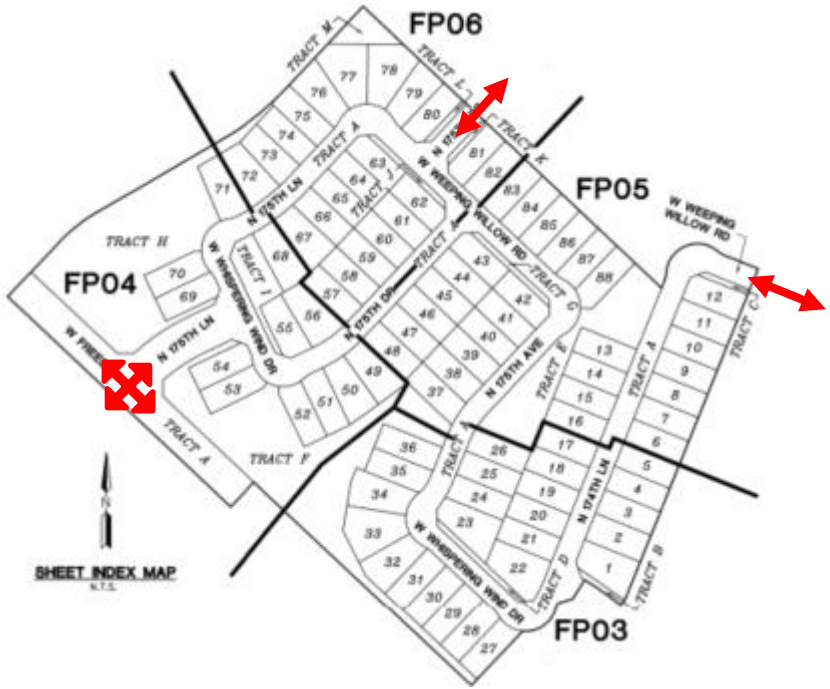

FS22-1268
FINAL PLAT

AMENITY SITE

AMENITY SITE

AMENITY SITE

AMENITY SITE

- Min. Open Space: 10%
- Total Open Space: 21.36% (3.97 Acres)
- Active Open Space: 0.91 Acres – 32%
- Passive Open Space: 3.06 Acres – 77%

Notes:
Sight distance requirements on Arterials and Collectors will adhere to Surprise Detail 4-01. Sight visibility within the unobstructed view easement area and in front of stop signs must meet or exceed requirements in Surprise Details 4-01 and 4-02. Trees, shrubs, and other landscaping are permitted within the sight visibility triangle provided limbs, leaves, needles or other foliage are kept below 30 inches or above 84 inches, per Surprise EDS Detail 4-01.

TREE PLANTING LEGEND

SYMBOL	BOTANICAL/ COMMON NAME	SIZE
	Fraxinus v. 'Rio Grande' ARIZONA ASH	36" BOX STANDARD
	Fraxinus v. 'Rio Grande' ARIZONA ASH	24" BOX STANDARD
	Pinus eldarica MONDEL PINE	24" BOX STANDARD
	Prosopis g. 'Maverick' HONEY MESQUITE	24" BOX STANDARD LOW BRANCH
	Quercus virginiana 'Heritage' HERITAGE LIVE OAK	24" BOX STANDARD

SHRUB PLANTING LEGEND

SYMBOL	BOTANICAL/COMMON NAME	SIZE	MINIMUM SPACING
	DASYLIRION WHEELERI SPOON YUCCA	5 GAL.	5'-0" O.C.
	BOUGAINVILLA 'TORCH GLOW' TORCH GLOW BOUGAINVILLA	5 GAL.	5'-0" O.C.
	BOUTELOUA G. 'BLONDE AMBITION'1 GAL. GRAMA GRASS	1 GAL.	3'-0" O.C.
	CAESALPINIA PULCHERRIMA MEXICAN BIRD OF PARADISE	5 GAL.	8'-0" O.C.
	EREMOPHILA 'VALENTINE' VALENTINE EMU BUSH	5 GAL.	5'-0" O.C.
	HESPERALOE PARVIFLORA RED YUCCA	5 GAL.	3'-0" O.C.
	LEUCOPHYLLUM LANGMANIAE 'RIO BRAVO' RIO BRAVO SAGE	5 GAL.	5'-0" O.C.
	MUHLENBERGIA C. 'REGAL MIST' BULL GRASS	1 GAL.	3'-0" O.C.
	MYRTUS COMMUNIS MYRTLE	5 GAL.	5'-0" O.C.
	OLEA EUROPAEA 'MONTRA' LITTLE OLLIE DWF OLIVE	5 GAL.	5'-0" O.C.
	PENNISETUM 'HAMELN' DWARF FOUNTAIN GRASS	1 GAL.	3'-0" O.C.
	RUELLIA PENINSULARIS BAJA RUELLIA	5 GAL.	5'-0" O.C.
	TEUCRIUM CHAMAEDRYS 'WALL GERMANDER	1 GAL.	24" O.C.
	TURF MIDIRON SOD		
	DECOMPOSED GRANITE - 'DESERT VERDE 3" SCREENED (BROWN TO MATCH ADJACENT SUBDIVISIONS)		

SVT = SIGHT VISIBILITY TRIANGLE

IRRIGATION WATER SOURCE: HERITAGE ASANTE MASTER IRRIGATION SYSTEM (RECLAIMED WATER)

TURF PEAK SEASON DEMAND (GDP) = 5,548 gdp
NON-TURF PEAK SEASON DEMAND (GDP) = 8,809 gdp
TOTAL ANNUAL DEMAND = 8.88 AC-FT OR 14,357.36 gallons

TOTAL PROJECT AREA: 777,050 SQ FT (17.8 ACRES)
TOTAL PLANTING AREAS: 180,700 SQ FT (23% OF PROJECT AREA)
TOTAL NON-TURF PLANTING AREA: 173,100 SQ FT
TOTAL TURF AREA : 7,600 SQ FT (4.2% OF PLANTING AREAS)

TOTAL OPEN SPACE:
172,933 SF (3.97 ACRES)

ACTIVE OPEN SPACE: 23%
42,050 SF (0.91 ACRES)

PASSIVE OPEN SPACE: 77%
138,650 SF (3.06 ACRES)

51638
PATRICK C.M. MURPHY
REGISTERED LANDSCAPE ARCHITECT
ARIZONA, U.S.A.

NORTH
SCALE: 1"=80'-0"

SMP
ENVIRONMENTAL DESIGN

HERITAGE ASANTE - PARCEL 7 Preliminary Active vs Passive Areas

DRP AZ 5, LLC | Surprise, AZ | July 15, 2022

SURPRISE CASE #FS22-0717

FS22-1268 LANDSCAPE PLAN

FS22-1268 WALL PLAN

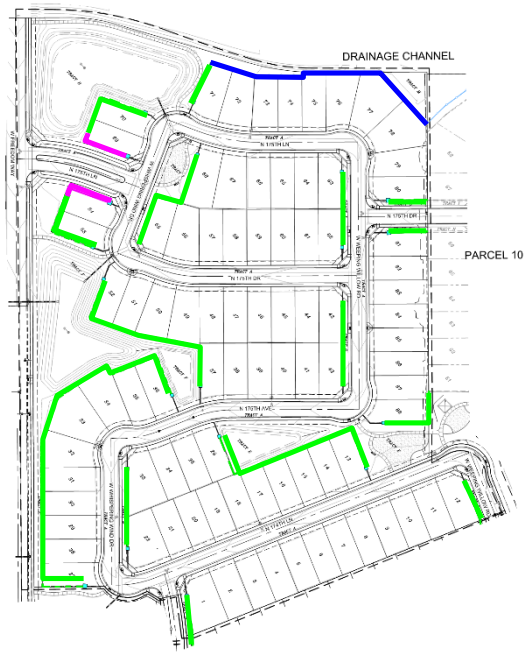

WALL LEGEND

- PROJECT THEME WALL
- THEME WALL PANEL
- THEME PILASTER
- 5' VIEW FENCE

NOTE:
NO WALLS TO BE GREATER THAN 8' INCLUDING THE HEIGHT OF THE RETAINING WALLS.

NOTE:
SIGHT DISTANCE REQUIREMENTS ON ARTERIALS AND COLLECTORS WILL ADHERE TO SURPRISE DETAIL 4-01. SIGHT VISIBILITY WITHIN THE UNOBSTRUCTED VIEW EASEMENT AREA AND IN FRONT OF STOP SIGNS MUST MEET OR EXCEED REQUIREMENTS IN SURPRISE DETAILS 4-01 AND 4-02

RETAINING WALL, SCREEN OR BUILDER WALL MATRIX
PA 7

Lot	Exposed Wall Height
1	8.0
13	8.0
14	8.0
15	8.0
16	8.0
17	8.0
18	8.0
19	8.0
20	7.0
22	8.0
23	8.0
24	7.1
27	8.0
28	8.0
29	8.0
30	8.0
31	8.0

Lot	Exposed Wall Height
32	8.0
34	7.0
37	8.0
38	8.0
40	7.1
42	7.5
49	8.0
50	8.0
51	8.0
52	8.0
53	8.0
55	7.4
63	8.0
69	7.3
81	7.1
86	7.1
88	8.0

51638
PATRICK C.M. MURPHY
ARIZONA U.S.A.
EXP. 12-31-22

NORTH
SCALE: 1"=80'-0"

SMP
ENVIRONMENTAL DESIGN

HERITAGE ASANTE - PARCEL 7 Preliminary Wall Plan

DRP AZ 5, LLC | Surprise, AZ | July 15, 2022

SURPRISE CASE #FS22-0717

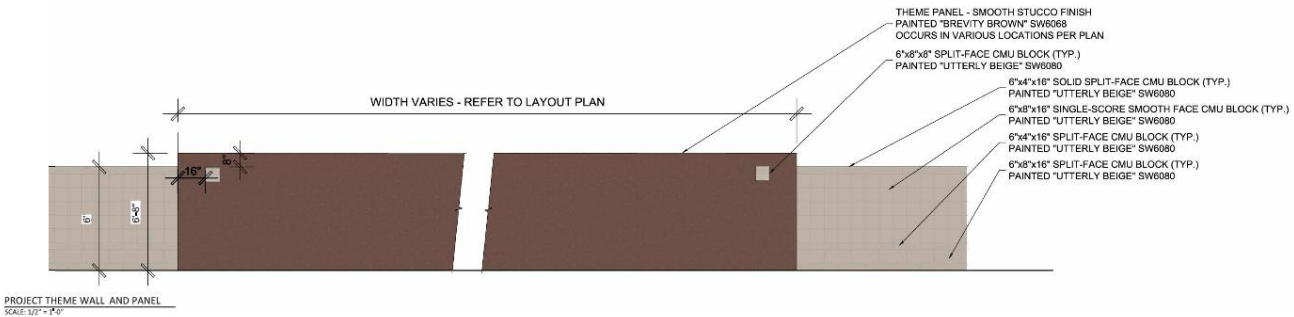

PROJECT THEME WALL AND PANEL
SCALE: 1/2" = 1'-0"

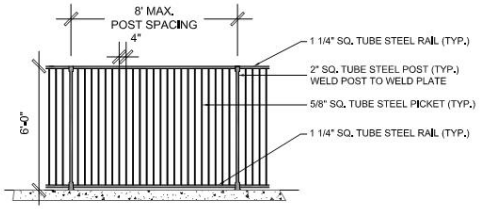

VIEW FENCE
SCALE: 1/2" = 1'-0"

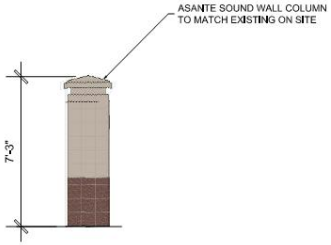

COLUMN DETAIL
SCALE: 1/2" = 1'-0"

NOTE:
NO WALLS TO BE GREATER THAN 8' INCLUDING THE HEIGHT OF THE RETAINING WALLS.

NOTE:
SIGHT DISTANCE REQUIREMENTS ON ARTERIALS AND COLLECTORS WILL ADHERE TO SURPRISE DETAIL 4-01. SIGHT VISIBILITY WITHIN THE UNOBSTRUCTED VIEW EASEMENT AREA AND IN FRONT OF STOP SIGNS MUST MEET OR EXCEED REQUIREMENTS IN SURPRISE DETAILS 4-01 AND 4-02

51638
PATRICK C.M.
MURPHY

SMP
ENVIRONMENTAL DESIGN

HERITAGE ASANTE - Parcel 7

Wall Details

DRP AZ 5, LLC | Surprise, AZ | July 15, 2022

SURPRISE CASE #FS22-0717

FS22-1268 WALL PLAN

SURPRISE
ARIZONA

QUESTIONS OR COMMENTS?

Thank You

CITY OF SURPRISE
Regular City Council Meeting

Council Meeting Date: January 17, 2023 Contact Person: Chris Sexton
Submitting Department: Community Development District: District 3
Staff Recommendations:

Consent: Yes Regular: No Public Hearing: No Report/Discussion: No

Agenda Wording:
Consideration and action pertaining to approval of the Final Plat entitled, "Final Re-Plat Toll at Prasada, Unit J – Phase 3" and date received December 1, 2022, a property generally located west of Cotton Lane, between Cactus Road and Peoria Avenue; Case FS22-0742.

Motion:
I move to approve the Final Plat entitled, "Final Re-Plat Toll at Prasada, Unit J – Phase 3" and date received December 1, 2022.

Background:
The subject request involves a Re-Plat for Unit J, Phase 3, of the Toll at Prasada project. A sewer sleeve was placed years ago across Hole 17 of the golf course, conveying waste water from Unit J to Unit Q. The location of the sleeve was shown in the wrong position. Therefore, a re-plat is required to shift the tract provided for the sewer to the east to better align with the existing sleeve.

Objective Analysis:
The subject Final Plat meets the requirements of the Prasada PAD, in addition to other requirements as set forth in the LDO. All city reviewing departments have reviewed the request and expressed no concerns.

Policy Compliant:
The Surprise General Plan 2035 shows the subject property as lying within the Neighborhood Character Area, which supports residential development of up to 8 DU/Ac or more, provided appropriate transitions are made between the various neighborhood types included within the character area. The subject request will not increase the density of the development. The site also lies within the 0-6 DU/Ac ribbon of the Luke Air Force Base Graduated Density Concept; however, the site is integral to the larger Sterling Grove project, which is approved for 2,207 lots overall and meets the guidance offered by the GDC.

Financial Impact:
While this item does not have an immediate or direct financial impact, ongoing development activity in the City will inevitably have a future financial impact as additional resources are needed to provide city

services.

Budget Impact:

There is no anticipated budget impact related to this item.

FTE Impact:

This item does not have an impact on current staff levels.

ATTACHMENTS:

1. 00 - FS22-0742 Toll at Prasada Unit J Phase 3 Final Plat - Staff Report
2. 01 FS22-0742 Toll at Prasada Unit J Phase 3 Final Plat - Vicinity Map
3. 02 FS22-0742 Toll at Prasada Unit J Phase 3 Final Plat - Case Map
4. 03 FS22-0742 Toll at Prasada Unit J Phase 3 Final Plat - Re-plat
5. FS22-0742 Toll at Prasada Unit J Phase 3 Final Plat - PowerPoint Presentation

---

SURPRISE
ARIZONA

FINAL PLAT

REPORT TO THE CITY COUNCIL

Case:	**FS22-0742**
Project Name:	Toll at Prasada Unit J Phase 3 - Re-Plat
Council District:	3 - Mesquite
Meeting Date:	**January 17, 2023**
Planner:	Chris Sexton, Planner II

Owner:	Toll Prasada, LLC
Applicant:	Aaron Insco of Toll Bros, Inc.
Request:	A Re-Plat for Toll at Prasada Unit J Phase 3 in the Prasada PAD
Site Location:	Generally located west of Cotton Lane, between Cactus Road and Peoria Avenue
Area:	13.44 acres
Density:	N/A
General Plan Conformance:	The proposal is consistent with the Surprise General Plan 2035
Support/Opposition:	None known

Findings:

- The proposed Final Plat is consistent with the Prasada PAD.
- The proposed Final Plat is consistent with the applicable City of Surprise regulations.
- The reviewing agencies have indicated no objections to the request.

PROJECT DESCRIPTION:

The subject request involves a Re-Plat for Unit J, Phase 3, of the Toll at Prasada project. A sewer sleeve was placed years ago across Hole 17 of the golf course, conveying waste water from Unit J to Unit Q. The location of the sleeve was shown in the wrong position therefore a re-plat is required to shift the tract provided for the sewer to the east to better align with existing sleeve.

EXISTING ZONING:

The following map depicts the existing zoning of the subject site and its surroundings.

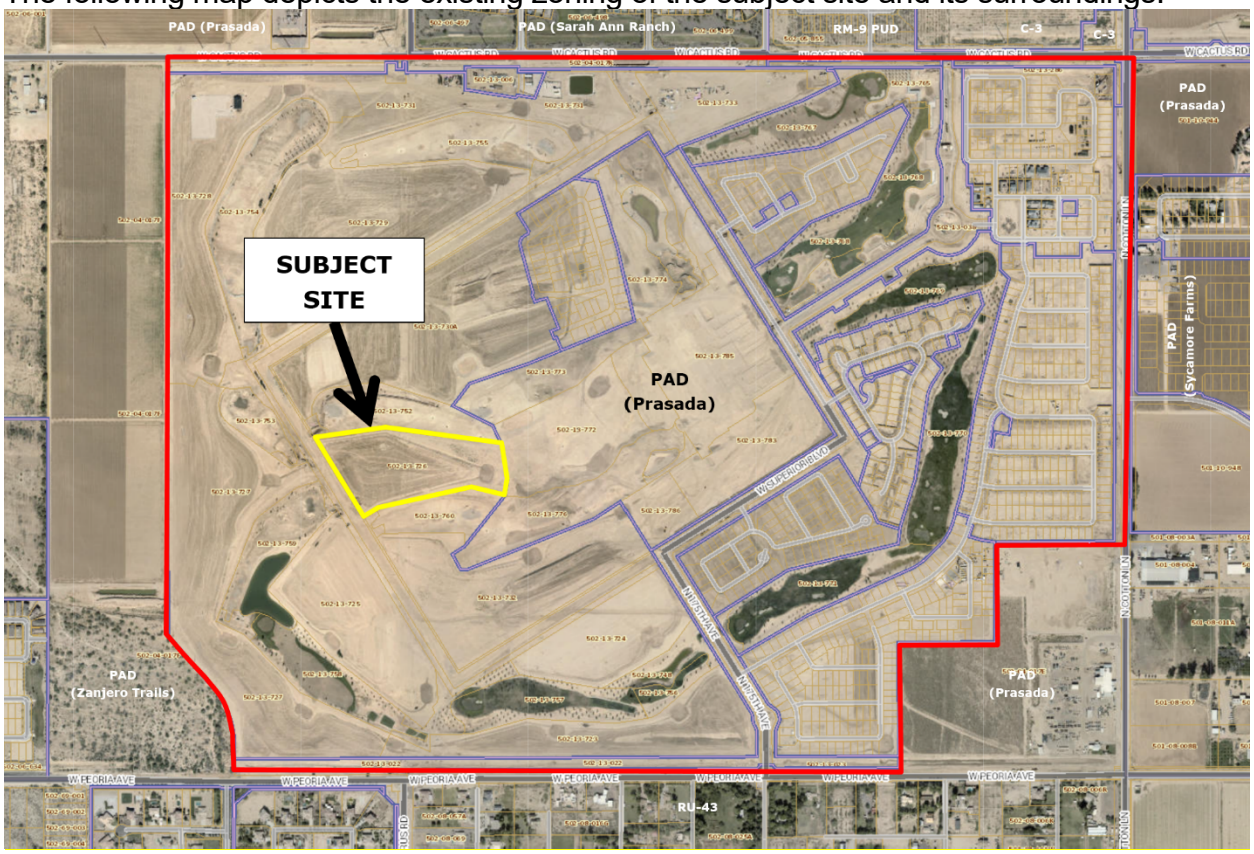

BACKGROUND:

June 22, 2006: The City Council approved the original Prasada PAD under case PAD05-465.

December 21, 2016: Staff approved a Minor Amendment to the Lake Village portion of the Prasada PAD under case FS16-400 for the purpose of revising the Lake Village land plan and development standards.

February 12, 2018: Staff approved a Minor Amendment to the Toll Brothers' portion of the Prasada Lake Village under case FS17-587 for the purpose of revising specific development standards related to the Toll Brothers development.

April 17, 2018: The City Council approved the original Preliminary Plat for Toll at Prasada under case FS17-394.

January 15, 2019: The City Council approved the Final Plat for Toll at Prasada Phase I Infrastructure under case FS18-290.

August 6, 2019: The City Council approved the Final Plat for Toll at Prasada Phase 2 Infrastructure under case FS19-061.

November 2, 2021: The City Council approved the Preliminary Plat for Unit J under case FS21-331.

May 23, 2022: The applicant filed for the Re-plat under case FS22-0742, the subject case.

ANALYSIS AND DISCUSSION:

The subject Final Plat adjusts the location of the tract which was shown in the wrong position therefore a re-plat is required to shift the tract provided for the sewer to the east to better align with existing sleeve.

City Council approval of the subject Final Plat will allow the applicant to obtain the civil construction permits necessary to begin construction of the infrastructure associated with Unit J. The proposed Final Plat is consistent with the Prasada PAD and other regulatory documents, and the reviewing agencies have expressed no objections to the approval of the Final Plat.

CONFORMANCE WITH ADOPTED PLANS:

Surprise General Plan 2035: The proposal is consistent with the Surprise General Plan 2035.

REVIEWING AGENCIES:

In addition to the standard city reviewing agencies, who indicate no objections to the requests, Luke Air Force Base, Maricopa Water District, and Maricopa County Flood Control District were included in the routing of this case. These agencies also indicate no objections.

Summary:

The subject Final Plat meets the requirements of the Prasada PAD, in addition to other applicable requirements as set forth in the LDO. All city reviewing departments have reviewed the request and expressed no concerns.

Findings:

- The proposed Final Plat is consistent with the Surprise General Plan.
- The proposed Final Plat is consistent with the Prasada PAD.
- The reviewing agencies have indicated no objections.

Attachments:

01 Vicinity Map
02 Case Map
03 Final Plat
PPT

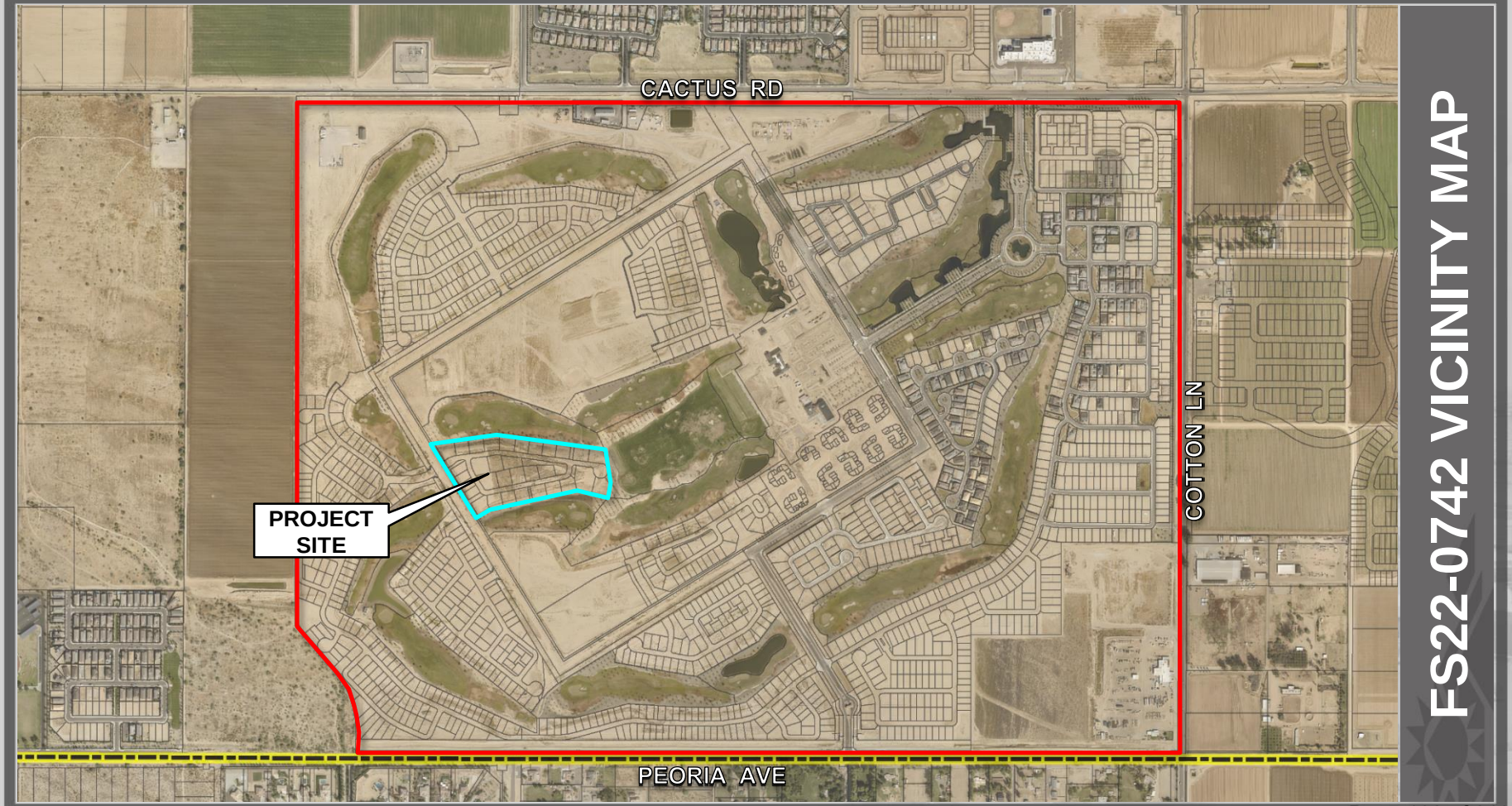

FS22-0742 VICINITY MAP

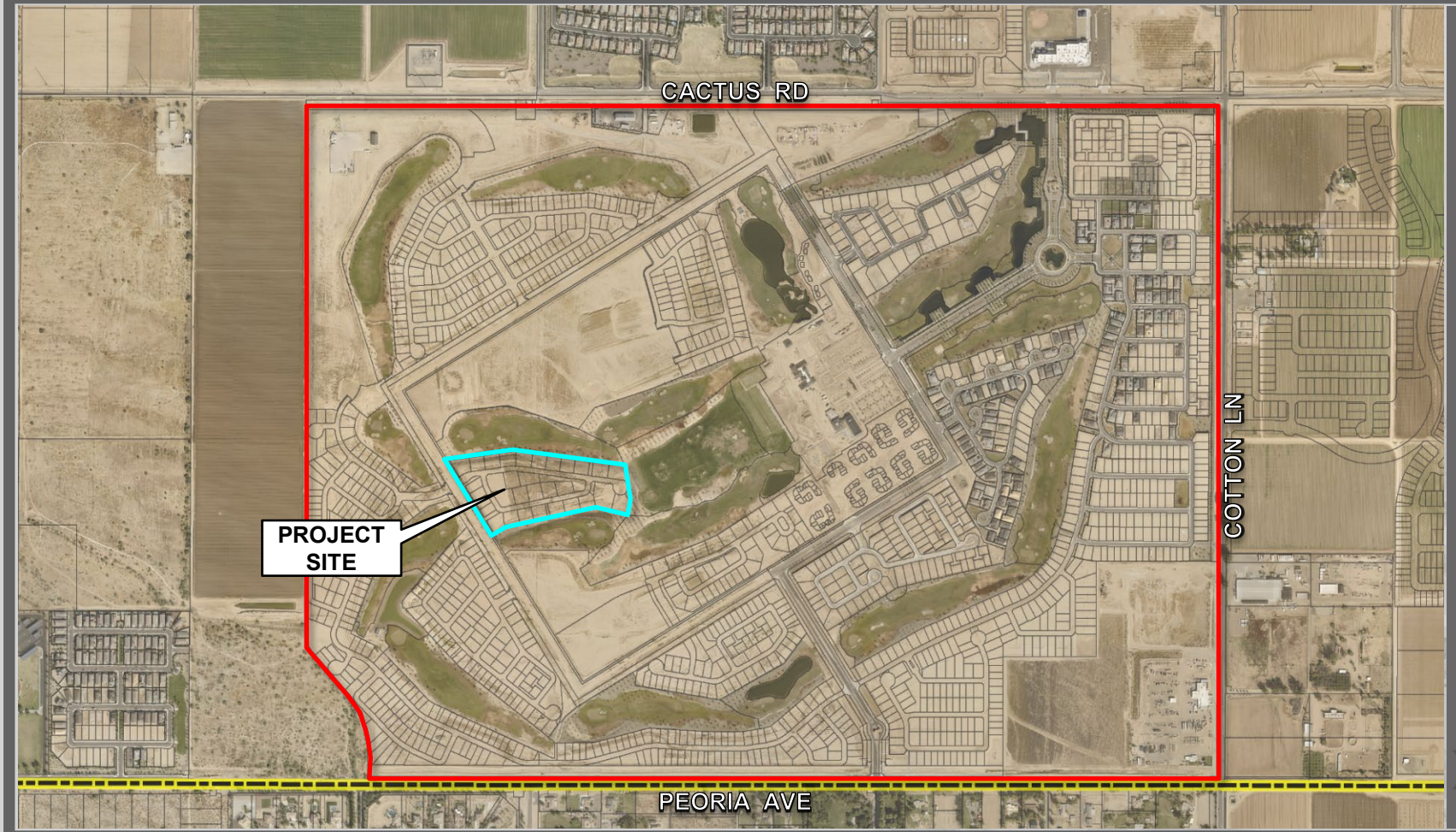

FS22-0742 CASE MAP

FINAL RE-PLAT

Toll at Prasada, Unit J - Phase 3

BEING A RE-PLAT OF PARCEL J, A PORTION OF TRACT E AND A PORTION OF TRACT HOLE 17,
TOLL AT PRASADA, PHASE 2 MASTER PLAT
AS RECORDED IN BOOK 1576 OF MAPS, PAGE 33, M.C.R.,
SITUATED IN A PORTION OF THE SOUTHEAST QUARTER OF SECTION 22 AND
A PORTION OF THE SOUTHWEST QUARTER OF SECTION 23,
TOWNSHIP 3 NORTH, RANGE 2 WEST OF THE GILA AND SALT RIVER MERIDIAN
MARICOPA COUNTY, ARIZONA

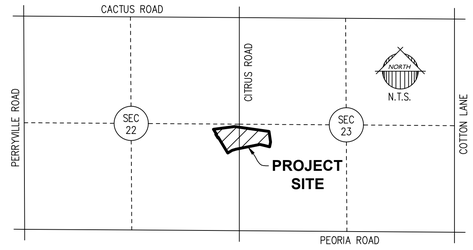

VICINITY MAP

DEDICATION

STATE OF ARIZONA }
} SS
COUNTY OF MARICOPA }

KNOW ALL PERSONS BY THESE PRESENTS: THAT TOLL PRASADA LLC, AN ARIZONA LIMITED LIABILITY COMPANY, "OWNER", HAS SUBDIVIDED UNDER THE NAME TOLL AT PRASADA, UNIT J – PHASE 3, BEING A RE-PLAT OF PARCEL J, A PORTION OF TRACT E AND A PORTION OF TRACT HOLE 17, TOLL AT PRASADA, PHASE 2 MASTER PLAT, AS RECORDED IN BOOK 1576 OF MAPS, PAGE 33, M.C.R., SITUATED IN PORTIONS OF SECTIONS SECTIONS 22 AND 23, TOWNSHIP 3 NORTH, RANGE 2 WEST OF THE GILA AND SALT RIVER MERIDIAN MARICOPA COUNTY, ARIZONA, BEING A SUBDIVISION LOCATED IN A PORTION OF THE SOUTHEAST QUARTER OF SECTION 22 AND A PORTION OF THE SOUTHWEST QUARTER OF SECTION 23, TOWNSHIP 3 NORTH, RANGE 2 WEST OF THE GILA AND SALT RIVER MERIDIAN, MARICOPA COUNTY, ARIZONA, AS SHOWN AND PLATTED HEREON AND DOES HEREBY PUBLISH THIS PLAT AS AND FOR THE PLAT OF TOLL AT PRASADA, UNIT J – PHASE 3 AND DECLARES THAT THIS PLAT SETS FORTH THE LOCATION AND GIVES THE DIMENSIONS OF EACH LOT, TRACT, STREET AND EASEMENT CONSTITUTING THE SAME, AND THAT EACH LOT, TRACT, STREET AND EASEMENT SHALL BE KNOWN BY THE NUMBER, LETTER, AND/OR AND NAME GIVEN TO EACH RESPECTIVELY AS SHOWN ON THIS PLAT.

OWNER HEREBY GRANTS TO THE CITY OF SURPRISE A PERPETUAL NON-EXCLUSIVE EASEMENT OVER, UNDER, UPON, AND ACROSS ALL AREAS DESIGNATED ON THE PLAT AS APPLICABLE: SEWER LINES AND MANHOLES, FOR THE PURPOSE OF INSTALLING, CONSTRUCTING, MAINTAINING, REPAIRING, REPLACING, AND UTILIZING THE SEWER LINES AND MANHOLES.

OWNER HEREBY GRANTS TO THE CITY OF SURPRISE A PERPETUAL EASEMENT ACROSS THE PLAT INCLUDING ROADS AND STREETS, OPEN SPACES, COMMUNITY FACILITIES, TRACTS, SIDEWALKS, DRAINAGE BASINS, AND ANY PROPERTY WITHIN THE PLAT OWNED BY THE HOMEOWNERS ASSOCIATION FOR THE PURPOSE OF PROVIDING CONTINUOUS AND UNINTERRUPTED INGRESS AND EGRESS FOR TRASH COLLECTION VEHICLES.

OWNER HEREBY GRANTS TO THE CITY OF SURPRISE A PERPETUAL CROSS ACCESS EASEMENT ACROSS THE PLAT INCLUDING ROADS AND STREETS, OPEN SPACES, COMMUNITY FACILITIES, TRACTS, SIDEWALKS, DRAINAGE BASINS, AND ANY PROPERTY WITHIN THE PLAT OWNED BY THE HOMEOWNERS ASSOCIATION FOR THE PURPOSE OF PROVIDING CONTINUOUS AND UNINTERRUPTED INGRESS AND EGRESS FOR EMERGENCY VEHICLES.

OWNER HEREBY GRANTS TO THE PUBLIC A PERPETUAL NON-EXCLUSIVE EASEMENT IN, UPON, OVER, UNDER, THROUGH, AND ACROSS THE AREAS DESIGNATED AS PUBLIC UTILITY EASEMENTS AS SHOWN ON THE PLAT FOR THE PURPOSE OF ACCESSING, INSTALLING, CONSTRUCTING, MAINTAINING, REPAIRING, REPLACING, AND UTILIZING PUBLIC UTILITIES.

OWNER HEREBY GRANTS TO THE CITY OF SURPRISE A PERPETUAL NON-EXCLUSIVE EASEMENT OVER, UPON, AND ACROSS THE AREAS DESIGNATED AS SIGHT VISIBILITY TRIANGLES FOR THE PURPOSE OF ENSURING THAT THESE AREAS REMAIN FREE OF SIGHT VISIBILITY OBSTRUCTIONS.

OWNER HEREBY GRANTS TO THE CITY OF SURPRISE A PERPETUAL NON-EXCLUSIVE PEDESTRIAN ACCESS AND SIDEWALK CONSTRUCTION AND MAINTENANCE EASEMENT OVER, UPON, AND ACROSS THE AREAS DESIGNATED AS SIDEWALK EASEMENTS AS SHOWN ON THE PLAT.

OWNER HEREBY GRANTS TO THE UNITED STATES OF AMERICA DEPARTMENT OF THE AIR FORCE ("USAF") AN AVIGATION EASEMENT OVER AND ACROSS THIS PLAT AND EVERY LOT AND PARCEL THEREOF, WHICH EASEMENT SHALL INCLUDE, BUT NOT BE LIMITED TO, THE RIGHT OF FLIGHT OF AIRCRAFT OVER THIS PLAT, TOGETHER WITH ITS ATTENDANT NOISE, VIBRATIONS, FUMES, DUST, FUEL AND LUBRICANT PARTICLES, AND ALL OTHER EFFECTS THAT MAY BE CAUSED BY THE OPERATION OF AIRCRAFT LANDING AT, OR TAKING OFF FROM, OR OPERATING AT OR ON LUKE AIR FORCE BASE AND ITS AUXILIARY FIELD.

THE EASEMENTS GRANTED WITHIN THIS DEDICATION ARE PERMANENT AND PERPETUAL AND SHALL RUN WITH THE LAND AND BE BINDING UPON OWNERS AND ITS HEIRS, ASSIGNS, AND SUCCESSORS IN INTEREST TO THIS PLAT OR ANY PARCEL OR LOT THEREOF.

ALL IMPROVEMENTS, FOR STREETS AND PUBLIC UTILITIES OWNED AND OPERATED BY THE CITY, INSTALLED OR CONSTRUCTED BY OWNER WITHIN THE PUBLIC RIGHTS-OF-WAY, THE EASEMENTS, OR ANY TRACTS OR PARCELS HEREBY DEDICATED TO THE CITY OF SURPRISE SHALL BE DEEMED TO HAVE BEEN DEDICATED BY OWNER TO THE CITY UPON THEIR COMPLETION; HOWEVER, SUCH TRANSFER SHALL NOT OCCUR UNTIL THE CITY COUNCIL FOR THE CITY OF SURPRISE MANIFESTS ITS ACCEPTANCE BY SEPARATE FORMAL COUNCIL ACTION.

OWNER HEREBY GRANTS TO THE PUBLIC A PERPETUAL NON-EXCLUSIVE PUBLIC UTILITY ACCESS IN, UPON, OVER, UNDER, THROUGH, AND ACROSS THE AREAS DESIGNATED AS PRIVATE STREET TRACTS.

TRACTS "J-A" THROUGH "J-G" ARE NOT DEDICATED TO THE PUBLIC, BUT ARE PLATTED AS COMMON PROPERTY FOR THE USE AND ENJOYMENT OF THE HOMEOWNERS ASSOCIATION, AS MORE FULLY SET FORTH IN THE DECLARATION OF COVENANTS, CONDITIONS, AND RESTRICTIONS. SAID HOMEOWNERS ASSOCIATION IS RESPONSIBLE FOR MAINTAINING SAID TRACTS.

IN WITNESS WHEREOF, OWNERS HAVE HEREUNTO CAUSED ITS CORPORATE NAMES TO BE SIGNED AND ITS CORPORATE SEAL TO BE AFFIXED BY THE UNDERSIGNED, DULY AUTHORIZED OFFICER THIS _____ DAY OF _____, 202_.

TOLL PRASADA LLC, AN ARIZONA LIMITED LIABILITY COMPANY

BY _____ DATE _____

ITS _____

ACKNOWLEDGMENT

STATE OF ARIZONA }
} SS
COUNTY OF MARICOPA }

ON THIS ____ DAY OF _____, 202_ BEFORE ME, THE UNDERSIGNED, PERSONALLY APPEARED _____, WHO ACKNOWLEDGED HIMSELF TO BE THE PERSON WHOSE NAME IS SUBSCRIBED TO THE INSTRUMENT WITHIN, AND WHO EXECUTED THE FOREGOING INSTRUMENT FOR THE PURPOSES THEREIN CONTAINED.

IN WITNESS WHEREOF, I HAVE HEREUNTO SET MY HAND AND OFFICIAL SEAL.

_____ _____
NOTARY PUBLIC DATE

_____
MY COMMISSION EXPIRES:

NOTICE OF PRASADA PRE-ANNEXATION DEVELOPMENT AGREEMENT

OWNER'S PREDECESSOR, SUBURBAN LAND RESERVE, INC., A UTAH CORPORATION, FULTON HOMES CORPORATION, AN ARIZONA CORPORATION, AND WESTCOR/SURPRISE LLC, AN ARIZONA LIMITED LIABILITY COMPANY HAVE ENTERED INTO A PRE-ANNEXATION1 DEVELOPMENT AGREEMENT DATED SEPTEMBER 12, 2006 ("AGREEMENT") WITH CITY OF SURPRISE, AN ARIZONA MUNICIPAL CORPORATION, FOR WHICH A MEMORANDUM OF AGREEMENT WAS RECORDED ON SEPTEMBER 19, 2066, AT THE MARICOPA COUNTY RECORDER'S OFFICE AT DOCUMENT NO. 20061238109. AGREEMENT WAS RECENTLY AMENDED AND RECORDED ON JULY 20, 2018, AT THE MARICOPA COUNTY RECORDER'S OFFICE DOCUMENT NO. 20180551464. THE PROPERTIES INVOLVED IN THIS PLAT ARE SUBJECT TO THIS AGREEMENT.

NOTICE OF INTERGOVERNMENTAL AGREEMENT

THE CITY OF SURPRISE ("CITY") AND MARICOPA COUNTY MUNICIPAL WATER CONSERVATION DISTRICT NUMBER ONE ("MWD") ENTERED INTO AN INTERGOVERNMENTAL AGREEMENT DATED APRIL 8, 1997, AND RECORDED IN THE MARICOPA COUNTY RECORDER'S OFFICE ON APRIL 9, 1997, UNDER DOCKET NO. 97-0231759 ("IGA"). CITY AND MWD HAVE FACILITIES AND PROPERTY INTERESTS DESCRIBED AND DELINEATED WITHIN CERTAIN SUBDIVISION PLATS OR, FOR LANDS NOT INCLUDED IN A SUBDIVISION PLAT, DECLARATIONS OF TURF LANDS OR DECLARATIONS OF URBANIZED AREA, THAT HAVE PRIOR AND SUPERIOR RIGHTS TO THE UTILITY SERVICE PROVIDERS, AS DEFINED IN THE IGA. THE IGA PROVIDES FOR THE CITY TO HAVE A PUBLIC UTILITY EASEMENT WITHIN CERTAIN MWD PROPERTY INTERESTS AND FOR MWD TO HAVE AN EASEMENT WITHIN CITY'S PUBLIC RIGHTS-OF-WAY. CITY AND MWD RIGHTS WITHIN THESE EASEMENTS ARE SUBJECT TO AND CONTROLLED BY THE TERMS AND CONDITIONS OF THE IGA

IN LOCATIONS WHERE APPLICABLE, INCLUDING ANY AND ALL DEDICATIONS WITHIN A SUBDIVISION PLAT, MWD'S PRIOR AND SUPERIOR RIGHTS OF ACCESS TO AND USE OF EXISTING AND FUTURE MWD FACILITIES AND PROPERTY INTERESTS, SHALL BE SUBJECT TO THE TERMS AND CONDITIONS OF THE IGA.

CITY SHALL HAVE THE RIGHT TO AUTHORIZE AND CONTROL THE UTILITY SERVICE PROVIDER'S USE AND OCCUPANCY OF THESE EASEMENTS. CITY REQUIRES THAT UTILITY SERVICE PROVIDERS CONSENT TO BE BOUND BY THE IGA PRIOR TO THE USE OR OCCUPANCY OF THE EASEMENTS GRANTED UNDER THE IGA. SUCH USE OR OCCUPANCY OF THE EASEMENTS CONSTITUTES CONSENT OF THE UTILITY SERVICE PROVIDERS TO BE BOUND BY THE IGA.

PUBLIC NOTICE

THE LOTS DEPICTED ON THIS PLAT ARE LOCATED WITHIN THE VICINITY OF LUKE AIR FORCE BASE AND MAY BE SUBJECT TO OVERFLIGHTS BY JET AIRCRAFT. ALL STRUCTURES WITHIN THIS PLAT SHALL BE CONSTRUCTED IN COMPLIANCE WITH THE SOUND ATTENUATION STANDARDS ADOPTED BY THE CITY OF SURPRISE. A MAP DEPICTING THE MOST CURRENT ADOPTED MAG NOISE CONTOURS IN RELATION TO THIS PLAT SHALL BE DISPLAYED IN ALL SALES OFFICES. ADDITIONAL INFORMATION MAY BE OBTAINED BY CONTACTING THE CITY OF SURPRISE COMMUNITY DEVELOPMENT DEPARTMENT.

RELEASE OF LIABILITY

TOLL PRASADA LLC, AN ARIZONA LIMITED LIABILITY COMPANY ("OWNER") DOES HEREBY (1) RELEASE AND DISCHARGE THE UNITED STATES OF AMERICA DEPARTMENT OF THE AIR FORCE (USAF) AND THE CITY OF SURPRISE, AND (2) INDEMNIFY, DEFEND, AND HOLD HARMLESS THE USAF AND THE CITY OF SURPRISE, OF AND FROM ANY LIABILITY FOR ANY AND ALL CLAIMS FOR DAMAGES OF ANY KIND TO PERSONS OR PROPERTY THAT MAY ARISE AT ANY TIME IN THE FUTURE OVER, OR IN CONNECTION WITH AIRCRAFT OVERFLIGHTS FROM AIRCRAFT UTILIZING LUKE AIR FORCE BASE, WHETHER SUCH DAMAGE SHALL ORIGINATE FROM NOISE, VIBRATION, FUMES, DUST, FUEL AND LUBRICANT PARTICLES, AND ALL OTHER EFFECTS THAT MAY BE CAUSED BY THE OPERATION OF AIRCRAFT LANDING AT, OR TAKING OFF FROM, OR OPERATING AT OR ON LUKE AIR FORCE BASE AND ITS AUXILIARY FIELDS. THIS INSTRUMENT SHALL RUN WITH THE LAND AND BE BINDING UPON OWNER AND ITS HEIRS, ASSIGNS, AND SUCCESSORS IN INTEREST TO THIS PLAT OR ANY PARCEL OR LOT THEREOF. THIS INSTRUMENT DOES NOT RELEASE THE USAF FROM LIABILITY FOR DAMAGE OR INJURY TO PERSON OR PROPERTY CAUSED BY FALLING AIRCRAFT OR FALLING PHYSICAL OBJECTS FROM AIRCRAFT, EXCEPT AS STATED HEREIN WITH RESPECT TO NOISE, FUMES, DUST, FUEL, AND LUBRICANT PARTICLES.

OWNER HEREBY FURTHER AGREES TO INDEMNIFY, DEFEND, AND HOLD HARMLESS THE CITY OF SURPRISE FROM ANY AND ALL CLAIMS FOR DAMAGES OF ANY KIND TO PERSONS OR PROPERTY THAT MAY ARISE IN CONNECTION WITH THE USE OF THE SIDEWALKS LOCATED WITHIN THE RIGHT-OF-WAY.

EPCOR PLAT DEDICATION

EXCEPT AS TO ANY AREAS SUBJECT TO THE EASEMENT OR EASEMENTS GRANTED TO MARICOPA WATER DISTRICT, AS DEPICTED ON THIS PLAT AND RECORDED IN THE OFFICE OF THE RECORDER, MARICOPA COUNTY, ARIZONA, A PERPETUAL WATER EASEMENT AS DESCRIBED IN THIS PLAT IS GRANTED TO EPCOR WATER ARIZONA INC., AND ITS SUCCESSORS AND ASSIGNS (COLLECTIVELY "GRANTEE"), TO CONSTRUCT, OPERATE, AND MAINTAIN WATER LINES AND APPURTENANT FACILITIES (COLLECTIVELY, "FACILITIES") UPON, ACROSS, OVER AND UNDER THE SURFACE OF THE EASEMENTS, TOGETHER WITH THE RIGHT TO OPERATE, REPAIR, REPLACE, MAINTAIN, AND REMOVE THE FACILITIES FROM THE PREMISES; TO ADD OR TO ALTER THE FACILITIES, AND TO PROVIDE GRANTEE WITH REASONABLE INGRESS AND EGRESS TO THE FACILITIES. GRANTEE WILL HAVE UNRESTRICTED ACCESS TO THE EASEMENT FOR THE ACTIVITIES DESCRIBED ABOVE AND FORMAL NOTIFICATION OR APPROVAL BY ANY ASSOCIATION PRIOR TO ACCESSING THE EASEMENT WILL NOT BE REQUIRED.

GRANTOR SHALL NOT ERECT OR CONSTRUCT OR PERMIT TO BE ERECTED OR CONSTRUCTED ANY BUILDING, STRUCTURE OR SIMILAR IMPROVEMENT WITHIN THE LIMITS OF THE EASEMENT GRANTED HEREIN. GRANTOR SHALL NOT, NOR PERMIT, THE GRADE OVER GRANTEE'S FACILITIES TO BE SUBSTANTIALLY ALTERED WITHOUT, IN EACH INSTANCE, THE PRIOR WRITTEN CONSENT OF GRANTEE, AND GRANTOR AGREES THAT NO OTHER PIPES OR CONDUITS SHALL BE PLACED WITHIN THE PREMISES SUBJECT TO THE EASEMENT GRANTED HEREIN, EXCEPT PIPES CROSSING GRANTEE'S FACILITIES AT RIGHT ANGLES, IN WHICH CASE, A MINIMUM VERTICAL DISTANCE OF TWO (2) FEET (AS MEASURED FROM THE CLOSEST POINTS ON THE OUTSIDE EDGES) SHALL BE MAINTAINED BETWEEN GRANTEE'S FACILITIES AND SUCH OTHER PIPES OR CONDUITS. UNLESS GRANTEE EXPRESSLY CONSENTS IN WRITING OTHERWISE, ANY AND ALL SEWER PIPES CROSSING THE EASEMENT GRANTED HEREIN SHALL BE LAID BELOW GRANTEE'S FACILITIES. HOWEVER, GRANTOR SHALL HAVE THE RIGHT TO CONSTRUCT AND ERECT FENCES, TO INSTALL LANDSCAPING, PARKING FACILITIES AND DRIVEWAYS, AND TO ESTABLISH OTHER USES THAT ARE NOT INCONSISTENT WITH USES WITHIN THE LIMITS OF SAID EASEMENT IN A MANNER THAT WILL NOT UNREASONABLY INTERFERE WITH GRANTEE'S ACCESS TO THE FACILITIES.

GENERAL NOTES

1. SPRINKLERS ARE REQUIRED IN ALL ONE AND TWO FAMILY DWELLINGS BUILT IN AREAS WHICH DO NOT HAVE AN ADEQUATE WATER SUPPLY.
2. NO ON-SITE GRADING OR EXCAVATION SHALL OCCUR WITHOUT FIRST OBTAINING A PERMIT FROM THE CITY OF SURPRISE.
3. THE PROPERTY IS LOCATED WITHIN AN AREA HAVING FLOOD ZONE "ZONE X SHADED," BY THE FEDERAL EMERGENCY MANAGEMENT AGENCY, ON FLOOD INSURANCE RATE MAP NO. 04013C1655L, WITH A DATE OF IDENTIFICATION OF OCTOBER 16, 2013, FOR COMMUNITY NO. 040053, IN MARICOPA COUNTY, STATE OF ARIZONA, WHICH IS THE CURRENT FLOOD INSURANCE RATE MAP FOR THE COMMUNITY IN WHICH SAID PROPERTY IS SITUATED.
4. THE ROADS DESIGNATED AS "PRIVATE" AND ANY APPURTENANCES INCLUDING BUT NOT LIMITED TO ROAD SIGNS, STRIPING, CURB AND GUTTER, AND SIDEWALKS ARE PRIVATE; SUCH ROADS AND APPURTENANCES ARE OWNED, MAINTAINED AND REPAIRED BY OWNER OR THE HOMEOWNER'S ASSOCIATION FORMED BY OWNER. THE CITY OF SURPRISE SHALL NOT MAINTAIN OR REPAIR ANY ROAD DESIGNATED AS "PRIVATE."
5. IN ACCORDANCE WITH ARS § 9-461.07, THE CITY OF SURPRISE HAS DETERMINED THAT ALL DEDICATIONS OCCURRING WITH THIS PLAT ARE IN CONFORMANCE WITH THE SURPRISE GENERAL PLAN.
6. PURSUANT TO A.R.S. § 42-11102, THE CITY OF SURPRISE, A POLITICAL SUBDIVISION OF THE STATE OF ARIZONA, IS EXEMPT FROM ALL TAXES AND ASSESSMENTS BASED ON ASSESSED VALUE EXCEPT FOR SPECIAL DISTRICTS #14751 AND 14710, WHEN APPLICABLE.
7. THE MAINTENANCE OF LANDSCAPING WITHIN THE OPEN SPACES, LANDSCAPED TRACTS, RETENTION BASINS AND PARKS SHALL BE THE RESPONSIBILITY OF THE OWNER OR THE HOMEOWNERS' ASSOCIATION FORMED BY THE OWNER.
8. THE MAINTENANCE OF LANDSCAPING WITHIN THE ADJACENT PUBLIC RIGHTS-OF-WAY, INCLUDING LANDSCAPED MEDIANS WITHIN COLLECTORS AND LOCAL STREETS AND LANDSCAPED AREAS BETWEEN THE CURB AND THE DETACHED SIDEWALK, SHALL BE THE RESPONSIBILITY OF THE ADJACENT PROPERTY OWNER OR THE PROPERTY HOMEOWNERS' ASSOCIATION FORMED BY THE ADJACENT PROPERTY.
9. ZONING OF THE PROPERTY IS PER SURPRISE ZONING CASE FS17-587 OR AS SUBSEQUENTLY AMENDED.
10. THIS FINAL PLAT IS IN SUBSTANTIAL CONFORMANCE WITH THE PRELIMINARY PLAT AS APPROVED UNDER CITY OF SURPRISE CASE FS21-331.

AREA SUMMARY TABLE

DESCRIPTION	AREA (SF)	AREA (ACRES)
LOTS 2101-2132 (32 LOTS)	434,738	9.9804
TRACTS J-A – J-G	44,572	1.0233
PRIVATE STREETS (TRACT J-PS1)	106,088	2.4354
GROSS AREA	585,398	13.4389

100 YEAR ASSURED WATER SUPPLY

THE SUBDIVIDER HAS OBTAINED A CERTIFICATE OF 100 YEAR ASSURED WATER SUPPLY FROM THE DEPARTMENT OF WATER RESOURCES.

27-701007.0000 — CERTIFICATE NUMBER
11/14/2018 — DATE

BASIS OF BEARING

THE SOUTH LINE OF THE SOUTHWEST QUARTER OF SECTION 23, TOWNSHIP 3 NORTH, RANGE 2 WEST OF THE GILA AND SALT RIVER MERIDIAN, BEING SOUTH 89°59'55" WEST AS MEASURED AND BEING SOUTH 89°59'47" WEST AS SHOWN ON MARICOPA COUNTY GDACS SURVEY RECORDED IN BOOK 661, PAGE 18, MARICOPA COUNTY RECORDS.

NOTICE OF TOLL AT PRASADA DEVELOPMENT AND WATER DELIVERY AGREEMENT

LANDOWNER ENTERED INTO THE TOLL AT PRASADA DEVELOPMENT AND WATER DELIVERY AGREEMENT DATED JANUARY 2, 2019 ("AGREEMENT") WITH MARICOPA COUNTY MUNICIPAL WATER CONSERVATION DISTRICT NUMBER ONE ("MWD") FOR WHICH A MEMORANDUM OF AGREEMENT WAS RECORDED ON JANUARY 3, 2019, AT THE MARICOPA COUNTY RECORDERS' OFFICE AT 2019-0002436. THE PROPERTIES INVOLVED IN THIS PLAT ARE SUBJECT TO THIS AGREEMENT. THE AGREEMENT AND THIS PLAT, INCLUDING ANY AND ALL DEDICATIONS THEREIN, HEREBY PRESERVE MWD'S PRIOR AND SUPERIOR RIGHTS OF ACCESS TO AND USE OF EXISTING AND FUTURE MWD FACILITIES AND MWD PROPERTY INTERESTS, AS SUCH TERMS ARE DEFINED IN THE AGREEMENT, TO ENABLE MWD TO ACCOMPLISH ALL OF MWD'S PURPOSES, INCLUDING, BUT NOT LIMITED TO, THE TRANSMISSION AND DISTRIBUTION OF WATER, WASTEWATER, POWER AND COMMUNICATIONS, AND TO CONSTRUCT, RECONSTRUCT, OPERATE, MAINTAIN AND REPLACE THOSE MWD FACILITIES AND MWD PROPERTY INTERESTS. THE AGREEMENT IS ON FILE AT THE OFFICES OF TOLL PRASADA LLC, AND MAY BE REVIEWED AS TO ALL DETAILS, WITH PARTICULAR REFERENCE TO SECTION 7 AND SECTION 9, UPON REASONABLE REQUEST.

DATED THIS _____ DAY OF _____, 202_.

MARICOPA COUNTY MUNICIPAL WATER CONSERVATION DISTRICT NUMBER ONE, A POLITICAL SUBDIVISION OF THE STATE OF ARIZONA

BY: _____ CHRISTINE CAIN
ITS: PROPERTY & CONTRACTS MANAGER

ATTEST:

BY: _____ GLEN VORTHERMS
ITS: ASSISTANT SECRETARY

TOLL PRASADA LLC, AN ARIZONA LIMITED LIABILITY COMPANY

BY: _____ _____

ITS: _____

OWNER/DEVELOPER

TOLL BROTHERS
8767 E VIA DE VENTURA, SUITE 390
SCOTTSDALE, AZ 85258
TEL: (602) 999-5684
CONTACT: AARON INSCO

ENGINEER

EPS GROUP, INC.
1130 N. ALMA SCHOOL ROAD, STE. 120
MESA, ARIZONA 85201
TEL: (480)-503-2250
FAX: (480)-503-2258
CONTACT: JAMES ROGERS, P.E.

SHEET INDEX

1 COVER SHEET
2 LOT AREA TABLE, TRACT AREA & USAGE TABLE, CURVE TABLE, LINE TABLE
3 – 4 FINAL PLAT PLAN SHEETS

HOMEOWNERS ASSOCIATION RATIFICATION

KNOW ALL MEN BY THESE PRESENTS: THAT TOLL AT PRASADA COMMUNITY ASSOCIATION, INC., AN ARIZONA NON-PROFIT CORPORATION, HEREBY RATIFIES, AFFIRMS AND APPROVES THIS PLAT FOR "TOLL AT PRASADA, UNIT J – PHASE 3" AND THE RESPONSIBILITIES IMPOSED UPON IT UNDER THIS PLAT.

IN WITNESS WHEREOF, TOLL AT PRASADA COMMUNITY ASSOCIATION, INC. HAS CAUSED ITS NAME TO BE AFFIXED BY THE UNDERSIGNED, DULY AUTHORIZED OFFICER THIS _____ DAY OF_____, 202_.

TOLL AT PRASADA COMMUNITY ASSOCIATION, INC.,
AN ARIZONA NON-PROFIT CORPORATION

BY: _____

ITS: _____

ACKNOWLEDGMENT

STATE OF ARIZONA }
} SS
COUNTY OF MARICOPA }

ON THIS ____ DAY OF _____, 202_ BEFORE ME, THE UNDERSIGNED, PERSONALLY APPEARED _____, WHO ACKNOWLEDGED HIMSELF TO BE THE PERSON WHOSE NAME IS SUBSCRIBED TO THE INSTRUMENT WITHIN, AND WHO EXECUTED THE FOREGOING INSTRUMENT FOR THE PURPOSES THEREIN CONTAINED.

IN WITNESS WHEREOF, I HAVE HEREUNTO SET MY HAND AND OFFICIAL SEAL.

_____ _____
NOTARY PUBLIC DATE

_____
MY COMMISSION EXPIRES:

CITY OF SURPRISE ENGINEER APPROVAL

DATA ON THIS PLAT REVIEWED AND APPROVED THIS _____ DAY OF _____, 202_, BY THE CITY ENGINEER OF SURPRISE, ARIZONA.

APPROVED _____ _____
CITY ENGINEER DATE

CITY OF SURPRISE COUNCIL APPROVAL

APPROVED BY THE CITY COUNCIL OF THE CITY OF SURPRISE, ARIZONA, THIS _____ DAY OF _____, 202_.

ATTEST:

_____ _____
MAYOR DATE

_____ _____
CITY CLERK DATE

CERTIFICATION

I, ROBERT A. JOHNSTON, HEREBY CERTIFY THAT I AM A REGISTERED LAND SURVEYOR IN THE STATE OF ARIZONA; THAT THIS PLAT CORRECTLY REPRESENTS A SURVEY MADE UNDER MY DIRECTION DURING THE MONTH OF SEPTEMBER, 2021; THAT THE SURVEY IS TRUE AND CORRECT AS SHOWN; THAT ALL MONUMENTS ACTUALLY EXIST OR WILL BE SET AS SHOWN; THAT SAID MONUMENTS ARE SUFFICIENT TO ENABLE THE SURVEY TO BE RETRACED.

ROBERT A. JOHNSTON, RLS 37495
EPS GROUP, INC.
1130 N. ALMA SCHOOL ROAD, STE. 120
MESA, ARIZONA 85201
PHONE: (480) 503-2250
FAX: (480) 503-2258

DATE OF PREPARATION: 09/07/21 (REVISED NOVEMBER 09, 2021, REVISED NOVEMBER 01, 2022 & REVISED NOVEMBER 29, 2022)

REGISTERED LAND SURVEYOR
CERTIFICATE NO.
37495
ROBERT A.
JOHNSTON
Date Signed 11-29-22

CASE NUMBER: FS22-0742

1130 N Alma School Rd., Suite 120
Mesa, AZ 85201
T:480.503.2250 | F:480.503.2258
www.epsgroupinc.com

EPS GROUP

Toll at Prasada
Unit J - Phase 3
SURPRISE, ARIZONA

FINAL RE-PLAT

Project:

Revisions:

Designer: RAJ
Drawn by: TJP

Job No.
16-339

FP01

Sheet No.
1
of 4

tpratonentis Nov 29, 2022 3:14pm S:\Projects\2016\16-339\Legal Survey\Dwgs\Final Plats\Phase 3\Unit J\16-339 - Ph3 - Unit J - Plat.dwg

LOT AREA TABLE			
LOT #	AREA (SF)	AREA (AC)	CATEGORY
2101	15,545	0.3569	D2
2102	12,100	0.2778	D2
2103	13,200	0.3030	D2
2104	14,000	0.3214	D2
2105	13,683	0.3141	D2
2106	12,100	0.2778	D2
2107	12,100	0.2778	D2
2108	12,100	0.2778	D2
2109	12,100	0.2778	D2
2110	13,420	0.3081	D2
2111	15,606	0.3583	D2
2112	17,602	0.4041	D2
2113	29,290	0.6724	D2
2114	13,533	0.3107	D2
2115	13,200	0.3030	D2
2116	12,650	0.2904	D2
2117	11,550	0.2652	D2
2118	12,100	0.2778	D2
2119	12,723	0.2921	D2
2120	15,289	0.3510	D2
2121	7,701	0.1768	C
2122	7,700	0.1768	C
2123	7,936	0.1822	C
2124	9,088	0.2086	C
2125	17,846	0.4097	D2
2126	14,029	0.3221	D2
2127	14,193	0.3258	D2
2128	13,075	0.3002	D2
2129	13,212	0.3033	D2
2130	14,197	0.3259	D2
2131	14,197	0.3259	D2
2132	17,671	0.4057	D2

LINE TABLE		
LINE	BEARING	LENGTH
L1	S81°58'17"W	11.73'
L2	N08°01'43"W	39.89'
L3	S76°34'54"E	28.28'
L4	S13°25'06"W	28.28'
L5	N31°34'54"W	104.00'
L6	S58°25'06"W	35.30'
L7	S58°25'06"W	38.96'
L8	N81°58'17"E	13.64'
L9	S58°25'06"W	12.50'
L10	S13°25'06"W	6.36'
L11	S13°25'06"W	21.92'
L12	N51°41'35"W	39.79'
L13	N07°40'40"E	38.00'
L14	N07°40'40"E	40.15'
L15	N07°40'40"E	80.15'
L16	S07°40'40"W	40.15'
L17	N34°21'26"W	68.92'

CURVE TABLE						
CURVE	LENGTH	RADIUS	DELTA	TANGENT	CHORD	CHORD BRG
C1	76.05'	185.00'	23°33'10"	38.57'	75.51'	S70°11'42"W
C2	61.66'	150.00'	23°33'10"	31.27'	61.23'	S70°11'42"W
C3	25.59'	105.00'	13°57'50"	12.86'	25.53'	N51°26'11"E
C4	62.21'	95.00'	37°31'01"	32.26'	61.10'	S63°12'46"W
C5	31.41'	20.00'	89°58'55"	19.99'	28.28'	N53°02'16"W
C6	31.42'	20.00'	90°01'23"	20.01'	28.29'	S36°57'35"W
C7	139.66'	340.00'	23°32'06"	70.83'	138.68'	S19°48'51"E
C8	131.54'	320.00'	23°33'10"	66.71'	130.62'	S19°48'18"E
C9	123.20'	300.00'	23°31'47"	62.48'	122.34'	S19°49'00"E
C10	24.54'	20.00'	70°17'39"	14.08'	23.03'	S66°43'43"E
C11	271.83'	58.00'	268°31'51"	59.51'	83.07'	N51°56'36"E

CURVE TABLE						
CURVE	LENGTH	RADIUS	DELTA	TANGENT	CHORD	CHORD BRG
C12	73.61'	60.00'	70°17'39"	42.24'	69.08'	S66°43'43"E
C13	137.07'	500.00'	15°42'24"	68.97'	136.64'	S89°49'28"W
C14	131.58'	480.00'	15°42'24"	66.21'	131.17'	S89°49'28"W
C15	126.10'	460.00'	15°42'24"	63.45'	125.71'	S89°49'28"W
C16	24.59'	20.00'	70°26'47"	14.12'	23.07'	N42°54'04"E
C17	49.18'	40.00'	70°26'47"	28.24'	46.14'	N42°54'04"E
C18	73.77'	60.00'	70°26'47"	42.36'	69.21'	N42°54'04"E
C19	31.42'	20.00'	90°00'00"	20.00'	28.28'	N37°19'20"W
C20	31.42'	20.00'	90°00'00"	20.00'	28.28'	S52°40'40"W
C21	30.90'	20.00'	88°31'51"	19.49'	27.92'	N38°03'24"W

LEGAL DESCRIPTION

A PORTION OF THE SOUTHEAST QUARTER OF SECTION 22 AND A PORTION OF THE SOUTHWEST QUARTER OF SECTION 23, TOWNSHIP 3 NORTH, RANGE 2 WEST OF THE GILA AND SALT RIVER MERIDIAN, MARICOPA COUNTY, ARIZONA, MORE PARTICULARLY DESCRIBED AS FOLLOWS:

COMMENCING AT A FOUND REBAR AT THE SOUTHWEST CORNER OF SAID SECTION 23, FROM WHICH A PIPE AT THE SOUTH QUARTER CORNER OF SAID SECTION 23 BEARS SOUTH 89 DEGREES 59 MINUTES 55 SECONDS WEST, 2644.60 FEET;

THENCE ALONG THE SOUTH LINE OF THE SOUTHWEST QUARTER OF SAID SECTION 23, NORTH 89 DEGREES 59 MINUTES 55 SECONDS EAST, 731.70 FEET TO A POINT ON SAID SOUTH LINE;

THENCE, DEPARTING SAID SOUTH LINE NORTH 0 DEGREES 00 MINUTES 05 SECONDS WEST, 2068.20 FEET TO THE POINT OF BEGINNING;

THENCE NORTH 76 DEGREES 02 MINUTES 58 SECONDS WEST, 132.06 FEET;

THENCE NORTH 77 DEGREES 02 MINUTES 56 SECONDS WEST, 115.95 FEET;

THENCE SOUTH 78 DEGREES 07 MINUTES 27 SECONDS WEST, 600.00 FEET;

THENCE SOUTH 73 DEGREES 09 MINUTES 16 SECONDS WEST, 100.49 FEET;

THENCE SOUTH 58 DEGREES 25 MINUTES 06 SECONDS WEST, 122.50 FEET;

THENCE NORTH 31 DEGREES 34 MINUTES 54 SECONDS WEST, 456.70 FEET;

THENCE SOUTH 13 DEGREES 25 MINUTES 06 SECONDS WEST, 21.92 FEET;

THENCE NORTH 31 DEGREES 34 MINUTES 54 SECONDS WEST, 104.00 FEET;

THENCE SOUTH 76 DEGREES 34 MINUTES 54 SECONDS EAST, 21.92 FEET;

THENCE NORTH 31 DEGREES 34 MINUTES 54 SECONDS WEST, 149.66 FEET;

THENCE NORTH 81 DEGREES 58 MINUTES 17 SECONDS EAST, 522.04 FEET;

THENCE SOUTH 82 DEGREES 19 MINUTES 20 SECONDS EAST, 856.65 FEET;

THENCE SOUTH 8 DEGREES 46 MINUTES 23 SECONDS EAST, 263.28 FEET;

THENCE SOUTH 10 DEGREES 16 MINUTES 41 SECONDS WEST, 120.00 FEET TO THE POINT OF BEGINNING.

CONTAINS 13.4389 ACRES, MORE OR LESS.

TRACT USE TABLE			
TRACT	USE	AREA (SF)	AREA (AC)
J–A	LANDSCAPE, OPEN SPACE, ** PUBLIC UTILITY EASEMENT & ** SIGHT DISTANCE TRIANGLE EASEMENT	1,883	0.0432
J–B	LANDSCAPE, OPEN SPACE & ** PUBLIC UTILITY EASEMENT	3,300	0.0758
J–C	LANDSCAPE, OPEN SPACE, DRAINAGE & ** PUBLIC UTILITY EASEMENT	1,597	0.0367
J–D	LANDSCAPE, OPEN SPACE, ** PUBLIC UTILITY EASEMENT & ** SIGHT DISTANCE TRIANGLE EASEMENT	19,067	0.4377
J–E	LANDSCAPE, OPEN SPACE, SEWER EASEMENT & ** PUBLIC UTILITY EASEMENT	3,300	0.0758
J–F	LANDSCAPE, OPEN SPACE, PUE & EMERGENCY ACCESS EASEMENT, ** PUBLIC UTILITY EASEMENT & ** SIGHT DISTANCE TRIANGLE EASEMENT	12,667	0.2908
J–G	LANDSCAPE, OPEN SPACE, ** PUBLIC UTILITY EASEMENT & ** SIGHT DISTANCE TRIANGLE EASEMENT	2,758	0.0633
J–PS1	PRIVATE STREET TRACT & PUBLIC UTILITY EASEMENT	106,088	2.4354

NOTES

1. COMMON AREAS MAY INCLUDE OPEN SPACE, LANDSCAPING, PEDESTRIAN PATHS, AND/OR AMENITIES.
2. SPECIFIC EASEMENTS THAT ARE BEING DEDICATED AS PART OF THIS PLAT ARE FULLY DELINEATED ON THE FOLLOWING SHEETS.
3. ** THE EASEMENTS LISTED ABOVE (SHOWN WITH AN ASTERIK **) ONLY AFFECT A PORTION OF THE TRACT WITH WHICH THEY ARE LISTED, AND ARE FULLY DELINEATED WITHIN THE PLAT. OTHER "USES" LISTED ABOVE ARE COMMON AREA.

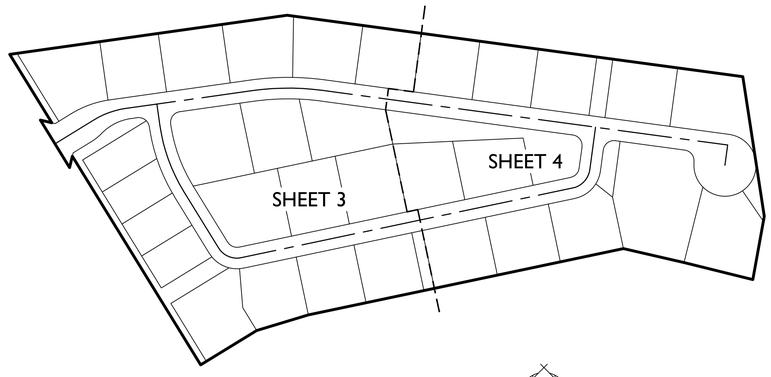

KEY MAP (NTS)

CASE NUMBER: FS22-0742

EPS GROUP
1130 N Alma School Rd., Suite 120
Mesa, AZ 85201
T:480.503.2250 | F:480.503.2258
w w w . e p s g r o u p i n c . c o m

Project:
Toll at Prasada
Unit J - Phase 3
SURPRISE, ARIZONA

FINAL RE-PLAT

Revisions:

Designer: RAJ
Drawn by: TJP

REGISTERED LAND SURVEYOR
CERTIFICATE NO.
37495
ROBERT A.
JOHNSTON
Date Signed 11-29-22

Job No.
16-339

FP02

Sheet No.
2
of 4

tprotonentis Nov 29, 2022 3:13pm S:\Projects\2016\16-339\Legal Survey\Dwgs\Final Plats\Phase 3\Unit J\16-339 - Ph3 - Unit J - Plat.dwg

TOLL AT PRASADA, PHASE 2 MASTER PLAT, MCR 2021-0239022

TRACT HOLE 2

TRACT I

TRACT HOLE 2

TRACT HOLE 2

MATCH LINE SEE SHEET 4

MATCH LINE SEE SHEET 4

MATCH LINE SEE SHEET 4

2101

2102

2103

2104

2105

2106

2107

2108

2109

2110

2111

2112

2113

2114

2115

2116

2117

2118

2119

2120

2121

2122

2123

2124

2125

2126

2127

2128

2129

2130

2131

2132

TRACT J-A

TRACT J-PSI

TRACT J-F

TRACT J-PSI

TRACT J-PSI

TRACT J-PSI

TRACT J-PSI

TRACT J-F

TRACT J-F

TRACT J-F

TRACT J-E

TRACT E

TRACT PSI

TRACT C

TRACT E

TRACT PSI

TRACT C

TRACT E

TRACT PSI

TRACT C

TRACT E

TRACT N

TRACT HOLE 17

W. MOUNTAINAIR STREET

W. EDINBURG STREET

N. WILLIAMSBURG AVENUE

N. GRAND HAVEN BOULEVARD

N81°58'17"E 522.04'

155.78'

110.00'

120.00'

122.63'

11.97'

130.28'

S82°19'20"E 856.65'

110.00'

1' VNAE

S80°14'43"E 110.02'

N80°14'43"W 110.00'

S80°14'43"E 110.00'

S07°55'52"W 114.25'

S7°40'40"W 110.00'

S7°40'40"W 110.00'

8' PUE

41.5' PS

865.26'

N31°34'54"W 148.71'

N31°34'54"W 149.86'

21.92'

6.36'

L=73.46'

C1

L=2.59'

107.41'

120.00'

N81°58'17"E 265.90'

S81°58'17"W 238.99'

179.32'

38.49'

L=78.19'

C13

L=58.88'

58.11'

S82°19'20"E 761.65'

513.11'

S82°19'20"E 761.65'

110.00'

20' PS

59.67'

L1

C2

C3

C4

C5

L2

C6

N81°58'17"E 139.32'

113.08'

26.24'

L=85.02'

C14

C15

L=41.08'

121.16'

S82°19'20"E 473.11'

S11°52'33"E 65.41'

S11°52'33"E 129.96'

S11°52'33"E 117.97'

S11°52'33"E 133.22'

S11°52'33"E 129.96'

S11°52'33"E 129.96'

S11°52'33"E 129.96'

S11°52'33"E 129.96'

N11°52'33"W 110.00'

N11°52'33"W 110.00'

N11°52'33"W 110.00'

N11°52'33"W 110.00'

N11°52'33"W 110.00'

N11°52'33"W 110.00'

S58°25'06"W 127.46'

85.96'

L6

L7

L8

L9

L10

L11

L12

L13

L14

L15

L16

L17

L18

L19

L20

L21

L22

L23

L24

L25

L26

L27

L28

L29

L30

L31

L32

L33

L34

L35

L36

L37

L38

L39

L40

L41

L42

L43

L44

L45

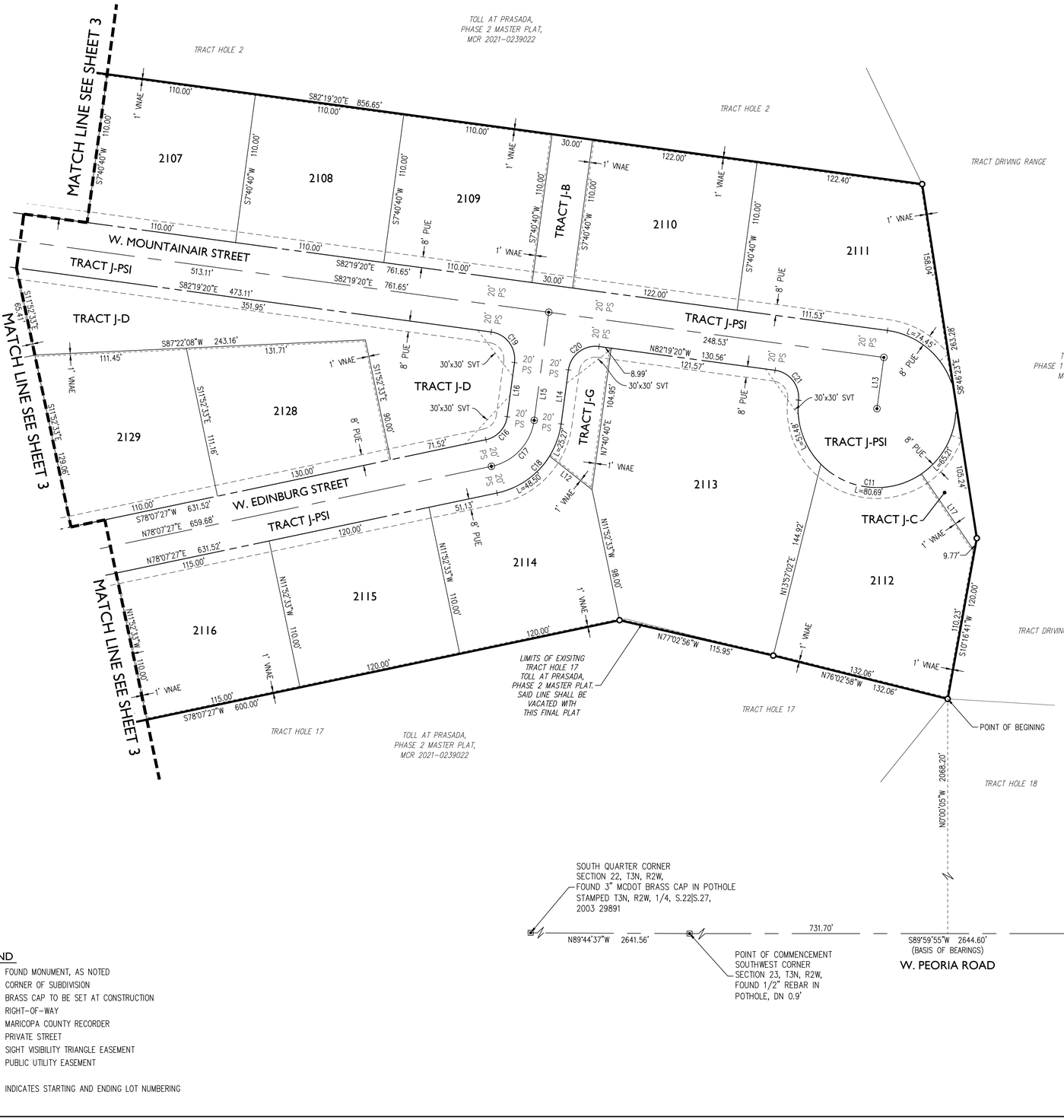

LEGEND

▣	FOUND MONUMENT, AS NOTED
○	CORNER OF SUBDIVISION
⊙	BRASS CAP TO BE SET AT CONSTRUCTION
R/W	RIGHT-OF-WAY
M.C.R.	MARICOPA COUNTY RECORDER
PS	PRIVATE STREET
SVT	SIGHT VISIBILITY TRIANGLE EASEMENT
PUE	PUBLIC UTILITY EASEMENT
(1401)	INDICATES STARTING AND ENDING LOT NUMBERING

CASE NUMBER: FS22-0742

EPS GROUP
1130 N Alma School Rd., Suite 120
Mesa, AZ 85201
T:480.503.2250 | F:480.503.2258
www.epsgroupinc.com

Toll at Prasada
Unit J - Phase 3
SURPRISE, ARIZONA

FINAL RE-PLAT

Project:

Revisions:

Designer: RAJ
Drawn by: TJP

REGISTERED LAND SURVEYOR
CERTIFICATE NO.
37495
ROBERT A.
JOHNSTON
Date Signed 11-29-22

Job No.
16-339

FP04

Sheet No.
4
of 4

tprotonentis Nov 29, 2022 3:12pm S:\Projects\2016\16-339\Legal Survey\Dwgs\Final Plats\Phase 3\Unit J\16-339 - Ph3 - Unit J - Plat.dwg

SURPRISE
ARIZONA

FS22-0742
Toll at Prasada Unit J Phase 3 Re-Plat

City Council

January 17, 2023

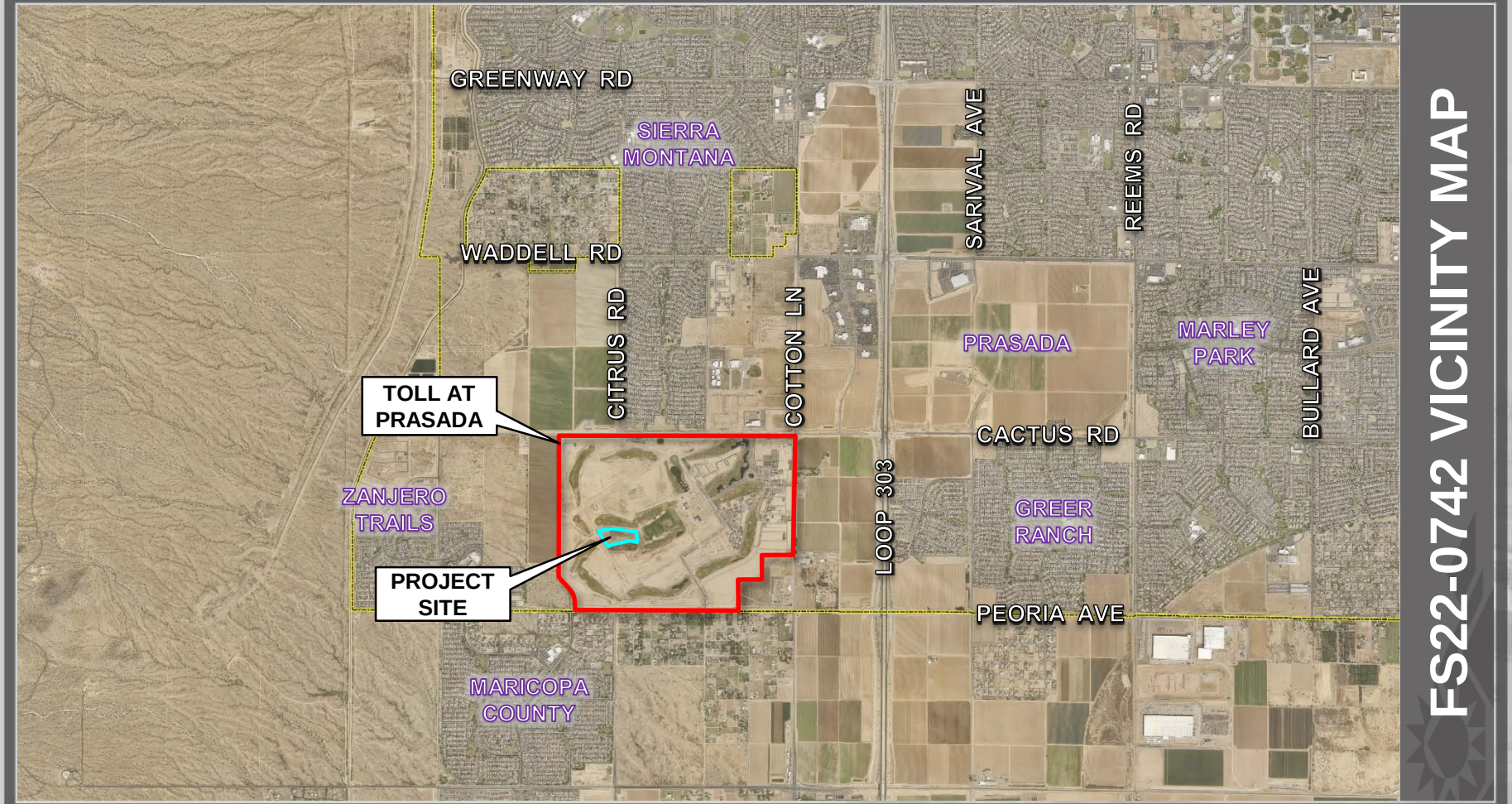

FS22-0742 VICINITY MAP

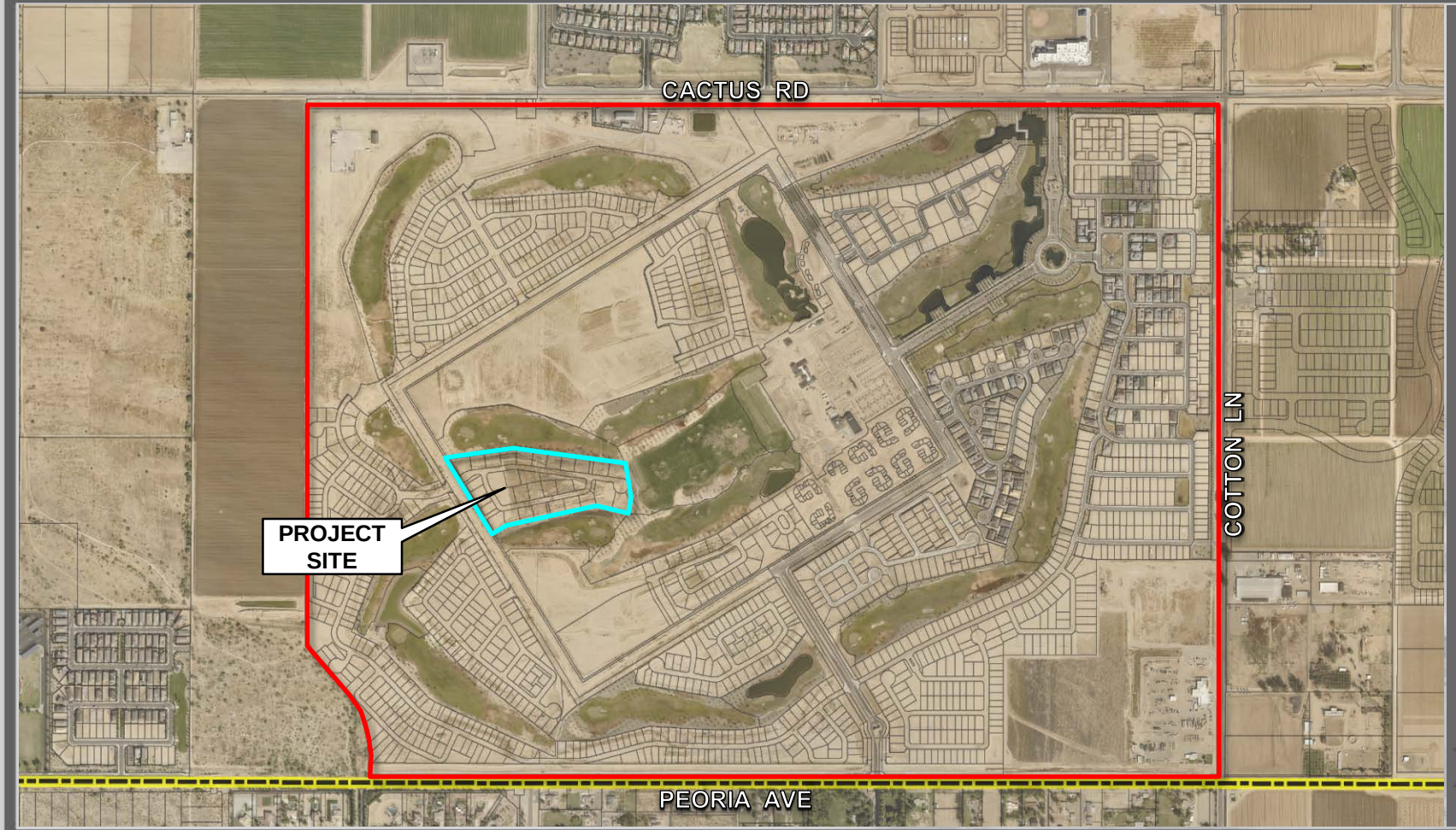

FS22-0742 VICINITY MAP

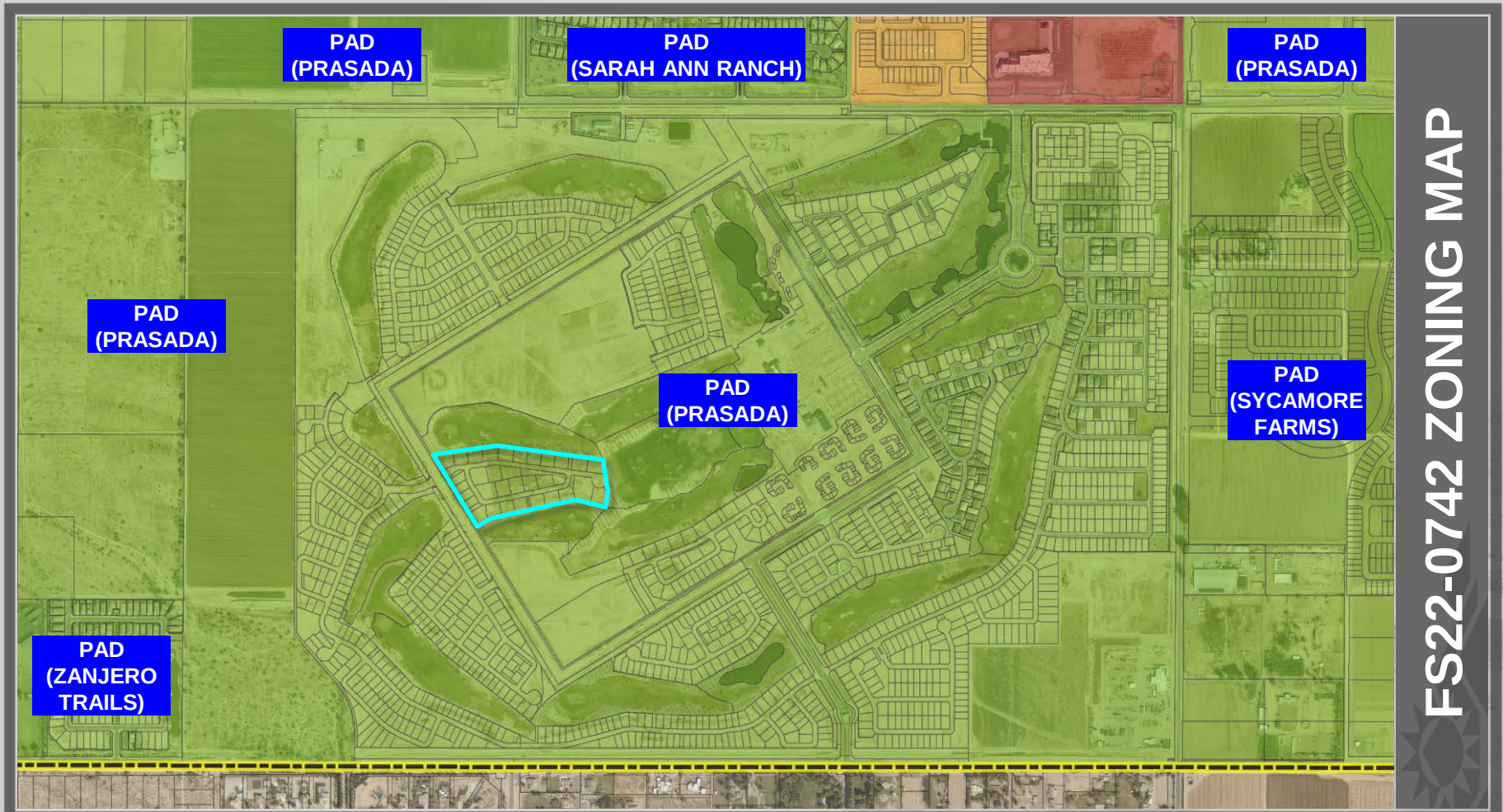
PAD
(PRASADA)
PAD
(SARAH ANN RANCH)
PAD
(PRASADA)
PAD
(PRASADA)
PAD
(PRASADA)
PAD
(SYCAMORE
FARMS)
PAD
(ZANJERO
TRAILS)
FS22-0742 ZONING MAP

Sterling Grove Master Plan

Toll at Prassda
Unit J - Phase 3
FINAL RE-PLAT

FS22-0742 FINAL PLAT

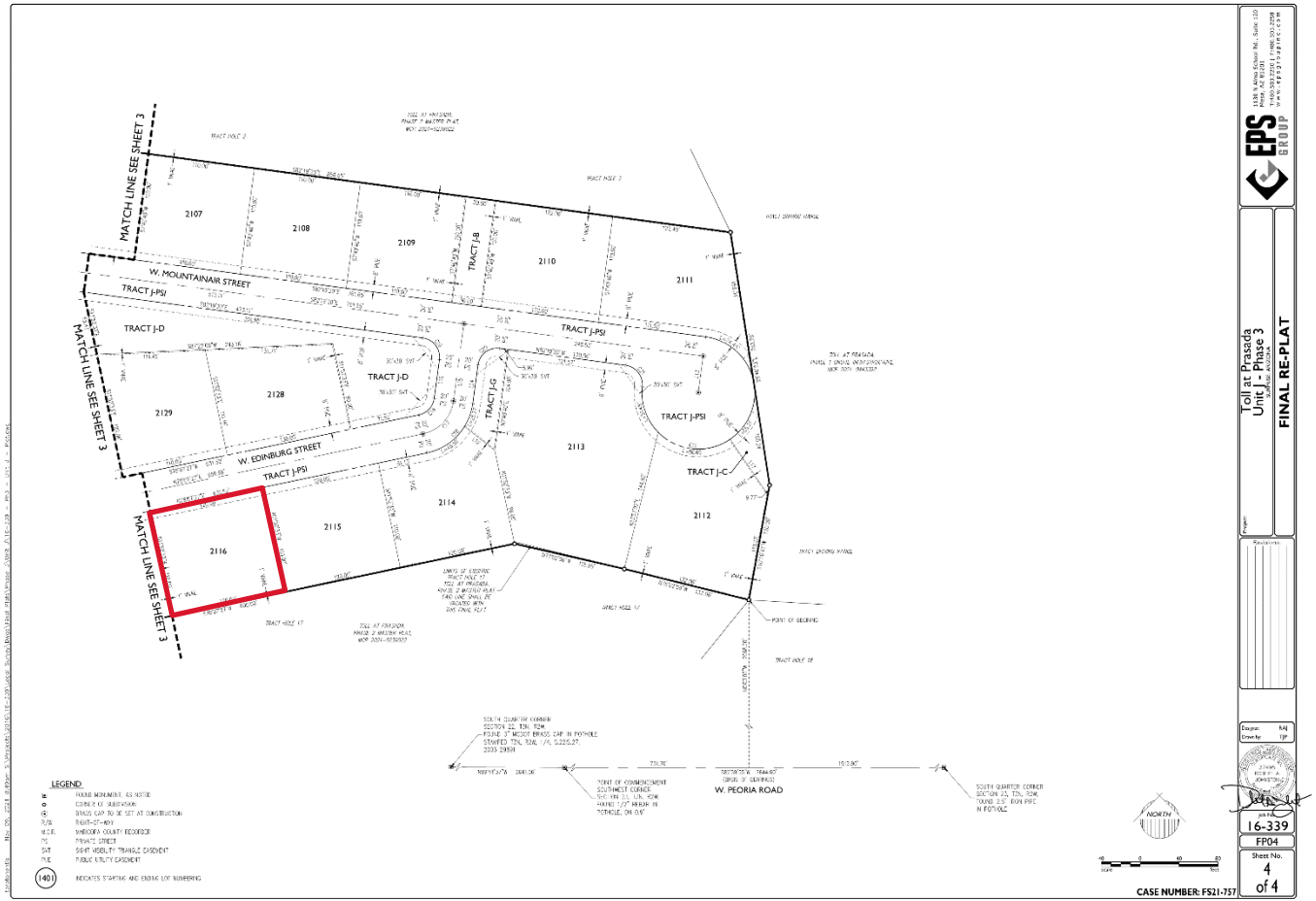

FS22-0742 FINAL PLAT

SURPRISE
ARIZONA

QUESTIONS OR COMMENTS?

Thank You

CITY OF SURPRISE
Regular City Council Meeting

Council Meeting Date: January 17, 2023
Submitting Department: Police
Staff Recommendations:

Contact Person:
District: Citywide

Consent: Yes Regular: No Public Hearing: No Report/Discussion: No

Agenda Wording:
Consideration and action pertaining to the renewal and acceptance of the FFY2023 U.S. Department of Justice Drug Enforcement Administration (DEA) Task Force Agreement and amending the FY2023 budget by moving budget authority of $39,700 from Contingency within the Grants Fund to Project #G31245 FFY23 DEA Task Force; Resolution #2023-06.

Motion:
I move to approve Resolution #2023-06.

Background:
This is a renewal of an annual agreement with the Department of Justice, which Surprise originally entered into in 2003. The Department of Justice wishes to extend this agreement for four years to be effective from October 1, 2022 through September 30, 2026. The Surprise Police Department (SPD) agrees to assign two (2) experienced officers to the DEA Phoenix Task Force for a period of not less than two (2) years. The annual overtime is capped at the equivalent to 25% of the salary of a GS-12, step 1, of the general pay scale for the rest of the United States and may be adjusted annually. For FFY23, the DEA agrees to reimburse the City of Surprise up to $19,840 per officer (no more than $39,700 total) for overtime expenses for this federal fiscal year, in addition to all investigative expenses, travel expenses, and per diem.

Objective Analysis:
One drawback from obtaining grant funding is that two experienced officers are at the task force and not performing daily police functions within the city. However, the positives more than outweigh the negatives. The agreement will help disrupt a considerable amount of drug trafficking activities, especially focused upon the West Valley, and these officers will return to the City of Surprise after two years having obtained considerable skills that they will use in the daily performance of their job.

Policy Compliant:
This action is compliant with City and Council policy. The City regularly partners with other government entities when it is beneficial to do so, as is this partnership. Also, the City has consistently and strongly opposed drug trafficking and the harm that results.

Financial Impact:
This agreement is for $19,840 per officer for overtime expenses for a one-time total of $39,680. There is no City match requirement; however, the City is responsible for payment of salary, benefits, and overtime to the officers assigned to the Task Force. The DEA will reimburse the SPD for overtime expenses. Additionally, the DEA will provide investigative equipment, supplies, training, and per diem to support the officer's activities in the Task Force.

Budget Impact:
The FY2023 adopted budget did not include appropriations for revenue and expenses related to the FFY2023 DEA Task Force IGA. Acceptance of this IGA will require an amendment to the Fiscal Year 2023 budget by moving budget authority of $39,700 from Contingency within the Grants Fund to Project G31245 FFY23 DEA Task Force for overtime and authorizing acceptance of this IGA. Budget allocations for future FYs will be included in the budget adoption process for that year. Salary and benefits for the two officers to be assigned to the Task Force have been included as part of the Surprise Police Department's FY2023 General Fund operating budget. This action represents a transfer of spending authority and does not increase or decrease the total adopted citywide expenditure budget.

FTE Impact:
The number of full-time equivalents (FTE) is not impacted by this action.

ATTACHMENTS:
1. FY2023 Surprise PD
2. OJP Form 4061.Surprise
3. Res 2023-06 DEA Task Force Agreement

PROGRAM - FUNDED
STATE AND LOCAL TASK FORCE AGREEMENT

This agreement is made this **1st day of October 2022**, between the United States Department of Justice, Drug Enforcement Administration (hereinafter "DEA"), and the **Surprise Police Department, ORI#AZ007200** (hereinafter "parent agency"). The DEA is authorized to enter into this cooperative agreement concerning the use and abuse of controlled substances under the provisions of 21 USC § 873.

WHEREAS there is evidence that trafficking in narcotics and dangerous drugs exists in the state of Arizona area and that such illegal activity has a substantial and detrimental effect on the health and general welfare of the people of Arizona, the parties hereto agree to the following:

1. The **Phoenix Task Force** will perform the activities and duties described below:
    a. disrupt the illicit drug traffic in the Arizona area by immobilizing targeted violators and trafficking organizations;
    b. gather and report intelligence data relating to trafficking in narcotics and dangerous drugs; and,
    c. conduct undercover operations where appropriate and engage in other traditional methods of investigation in order that the task force's activities will result in effective prosecution before the courts of the United States and the state of Arizona.
2. To accomplish the objectives of the Phoenix Task Force, the parent agency agrees to detail **two (2)** experienced officers to the Phoenix Task Force for a period of not less than two years. During this period of assignment, the parent agency officers will be under the direct supervision and control of DEA supervisory personnel assigned to the task force.
3. The parent agency officers assigned to the task force shall adhere to DEA policies and procedures. Failure to adhere to DEA policies and procedures shall be grounds for dismissal from the task force.
4. The parent agency officers assigned to the task force shall be deputized as task force officers of DEA pursuant to 21 USC § 878.
5. To accomplish the objectives of the Phoenix Task Force, DEA will assign six (6) special agents to the task force. The parent agency agrees to provide and maintain a vehicle for use for each of its assigned task force officers. DEA will also, subject to the availability of annually appropriated funds or any continuing resolution thereof, provide necessary funds and equipment to support the activities of the DEA special agents and parent agency officers assigned to the task force. This support will include: office space, office supplies, travel funds, funds for the purchase of evidence and information, investigative equipment, training, and other support items.

6. During the period of assignment to the Phoenix Task Force, the parent agency will remain responsible for establishing the salary and benefits, including overtime, of the officers assigned to the task force, and for making all payments due them. DEA will, subject to availability of funds, reimburse the parent agency for overtime payments. Annual overtime for each state and local law enforcement officer is capped at the equivalent to 25% of the salary of a GS-12, step 1, of the general pay scale for the rest of the United States. Reimbursement for all types of qualified expenses shall be contingent upon availability of funds and submission of a proper request for reimbursement which shall be submitted monthly or quarterly on a fiscal year basis, and which provides the names of investigators who incurred overtime for DEA during invoiced period, the number of overtime hours incurred, the hourly regular and overtime rates in effect for each investigator, and the total cost for the invoiced period. The parent agency will bill overtime as it is performed and no later than 60 days after the end of each quarter in which the overtime is performed. ***Note: Task Force Officer's overtime shall not include any costs for benefits, such as retirement, FICA, and other expenses.***
7. In no event will the parent agency charge any indirect cost rate to DEA for the administration or implementation of this agreement.
8. The parent agency shall maintain on a current basis complete and accurate records and accounts of all obligations and expenditures of funds under this agreement in accordance with generally accepted accounting principles and instructions provided by DEA to facilitate on-site inspection and auditing of such records and accounts.
9. The parent agency shall permit and have readily available for examination and auditing by DEA, the United States Department of Justice, the Comptroller General of the United States, and any of their duly authorized agents and representatives, any and all records, documents, accounts, invoices, receipts or expenditures relating to this agreement. The parent agency shall maintain all such reports and records until all audits and examinations are completed and resolved, or for a period of six (6) years after termination of this agreement, whichever is later.
10. The parent agency shall comply with Title VI of the Civil Rights Act of 1964, Section 504 of the Rehabilitation Act of 1973, the Age Discrimination Act of 1975, as amended, and all requirements imposed by or pursuant to the regulations of the United States Department of Justice implementing those laws, 28 C.F.R. Part 42, Subparts C, F, G, H and I.
11. The parent agency agrees that an authorized officer or employee will execute and return to DEA the attached OJP Form 4061/6, *Certification Regarding Lobbying; Debarment, Suspension and Other Responsibility Matters; and Drug-Free Workplace Requirements*. The parent agency acknowledges that this agreement will not take effect and no federal funds will be awarded to the parent agency by DEA until the completed certification is received.

12. When issuing statements, press releases, requests for proposals, bid solicitations, and other documents describing projects or programs funded in whole or in part with federal money, the parent agency shall clearly state: (1) the percentage of the total cost of the program or project which will be financed with federal money and (2) the dollar amount of federal funds for the project or program.
13. The term of this agreement shall be effective from the date in paragraph number one until September 30, 2026. This agreement may be terminated by either party on 30 days' advance written notice. DEA's support to the task force, including reimbursement of overtime, is subject to the availability of funds on a fiscal year basis (October 1 through September 30 of the next year). Billing for all outstanding obligations must be received by DEA within 60 days of the end of the fiscal year or within 60 days of the date of termination of this agreement. DEA will be responsible only for obligations incurred by parent agency during the term of this agreement on a fiscal year basis, subject to the availability of funds.

For the Drug Enforcement Administration:

Cheri A. Oz, Special Agent in Charge
Phoenix Field Division

Date

For the Surprise Police Department:

Benny Pina, Chief of Police

Date

U.S. DEPARTMENT OF JUSTICE
OFFICE OF JUSTICE PROGRAMS
OFFICE OF THE COMPTROLLER

CERTIFICATIONS REGARDING LOBBYING; DEBARMENT, SUSPENSION AND OTHER RESPONSIBILITY MATTERS; AND DRUG-FREE WORKPLACE REQUIREMENTS

Applicants should refer to the regulations cited below to determine the certification to which they are required to attest. Applicants should also review the instructions for certification included in the regulations before completing this from. Signature of this form provides for compliance with certification requirements under 28 CFR Part 69, "New Restrictions on Lobbying" and 28 CFR Part 67, "Government-wide Department and Suspension (Nonprocurement) and Government-wide Requirements for Drug-Free Workplace (Grants)." The certifications shall be treated as a material representation of fact upon reliance will be placed when the Department of Justice determines to award the covered transaction, grant, or cooperative agreement.

1. LOBBYING

As required by Section 1352, Title 31 of the U.S. Code, and implemented at 28 CFR Part 69, for persons entering into a grant or cooperative agreement over $100,000, as defined at 28 CFR Part 69, the applicant certifies that:

(a) No Federal appropriate funds have been paid or will be paid, by or on behalf of the undersigned, to any person for influencing or attempting to influence an officer or employee of any agency, a Member of Congress, an officer or employee of Congress, or an employee of a Member of Congress in connection with the making of any Federal grant, the entering into of any cooperative agreement, and extension, continuation, renewal, amendment, or modification of any Federal grant or cooperative agreement;

(b) If any funds other than Federal appropriated funds have been paid or will be paid to any person for influencing or attempting to influence an officer or employee of any agency, a Member of Congress, an officer or employee of Congress, or an employee of a Member of Congress in connection with this Federal grant or cooperative agreement, the undersigned shall complete and submit Standard Form - LLL, "Disclosure of Lobbying Activities," in accordance with its instructions;

(c) The undersigned shall require that the language of this certification be included in the award documents for all subawards at all tiers (including subgrants, contracts under grants and cooperative agreements, and subcontracts) and that all sub-recipients shall certify and disclose accordingly.

2. DEBARMENT, SUSPENSION, AND OTHER RESPONSIBILITY MATTERS (DIRECT RECIPIENT)

As required by Executive Order 12549, Debarment and Suspension, and implemented at 28 CFR Prt 67, for prospective participants in primary covered transactions, as defined at 28 CFR Part 67, Section 67.510-

A. The applicant certifies that it and its principals:

(a) Are not presently debarred, suspended, proposed for debarment, declared ineligible, sentenced to a denial of Federal benefits by a State or Federal court, or voluntarily excluded from covered transactions by any Federal department or agency;

(b) Have not within a three-year period preceding this application been convicted of or had a civil judgment rendered against them for commission of fraud or a criminal offense in connection with obtaining, attempting to obtain, or performing a public (Federal, State, or local) transaction or contract under a public transaction; violation of Federal or State antitrust statutes or commission of embezzlement, theft, forgery, bribery, falsification or destruction of records, making false statements, or receiving stolen property;

(c) Are not presently indicted for or otherwise criminally or civilly charged by a governmental entity (Federal, State, or local) with commission of any of the offenses enumerated in paragraph (1) (b) of this certification; and

(d) Have not within a three-year period preceding this application had one or more public transactions (Federal, State, or local) terminated for cause or default; and

B. Where the applicant is unable to certify to any of the statements in this certification, he or she shall attach an explanation to this application.

3. DRUG-FREE WORKPLACE (GRANTEES OTHER THAN INDIVIDUALS)

As required by the Drug-Free Workplace Act of 1988, and implemented at 28 CFR Part 67, Subpart F, for grantees, as defined at 28 CFR Part 67 Sections 67.615 and 67.620-

A. The applicant certifies that it will or will continue to provide a drug-free workplace by:

(a) Publishing a statement notifying employees that the unlawful manufacture, distribution, dispensing, possession, or use of a controlled substance is prohibited in the grantee's workplace and specifying the actions that will be taken against employees for violation of such prohibition;

(b) Establishing an on-going drug-free awareness program to inform employees about-

(1) The dangers of drugs abuse in the workplace;

(2) The grantee's policy of maintaining a drug-free workplace;

(3) Any available drug counseling, rehabilitation, and employee assistance programs; and

(4) The penalties that may be imposed upon employees for drug abuse violations occurring in the workplace;

(c) Making it a requirement that each employee to be engaged in the performance of the grant be given a copy of the statement required by paragraph (a);

(d) Notifying the employee in the statement required by paragraph (a) that, as a condition of employment under the grant, the employee will-

(1) Abide by the terms of the statement; and

(2) Notify the employer in writing of his or her conviction for a violation of a criminal drug statute occurring in the workplace no later than five calendar days after such conviction;

(e) Notifying the agency, in writing, within 10 calendar days after receiving notice under subparagraph (d)(2) from an employee or otherwise receiving actual notice of such conviction. Employers of convicted employees must provide notice, including position title, to: Department of Justice, Office of Justice Programs, ATTN: Control Desk, 633 Indiana Avenue, N.W., Washington, D.C. 20531. Notice shall include the identification number(s) of each affected grant;

(f) Taking one of the following actions, within 30 calendar days of receiving notice under subparagraph (d)(2), with respect to any employee who is so convicted-

(1) Taking appropriate personnel action against such an employee, up to and including termination, consistent with the requirements of the Rehabilitation Act of 1973, as amended; or

(2) Requiring such employee to participate satisfactorily in a drug abuse assistance or rehabilitation program approved for such purposes by a Federal, State, or local health, law enforcement, or other appropriate agency;

(g) Making a good faith effort to continue to maintain a drug- free workplace through implementation of paragraphs (a), (b), (c), (d), (e), and (f).

B. The grantee may insert in the space provided below the site (s) for the performance of work done in connection with the specific grant:

Place of Performance (Street address, city, country, state, zip code)

DEA Offices

Check ☐ if there are workplace on file that are not identified here.

Section 67, 630 of the regulations provides that a grantee that is a State may elect to make one certification in each Federal fiscal year. A copy of which should be included with each application for Department of Justice funding. States and State agencies may elect to use OJP Form 4061/7.

Check ☐ if the State has elected to complete OJP Form 4061/7.

DRUG-FREE WORKPLACE (GRANTEES WHO ARE INDIVIDUALS)

As required by the Drug-Free Workplace Act of 1988, and implemented at 28 CFR Part 67, Subpart F, for grantees, as defined at 28 CFR Part 67; Sections 67.615 and 67.620-

A. As a condition of the grant, I certify that I will not engage in the unlawful manufacture, distribution, dispensing, possession, or use of a controlled substance in condition any activity with the grant; and

B. If convinced of a criminal drug offense resulting from a violation occurring during the conduct of any grant activity, I will report the conviction, in writing, within 10 calendar days of the conviction, to: Department of Justice, Office of Justice Programs, ATTN: Control Desk, 633 Indiana Avenue, N.W., Washington, D.C. 20531.

As the duly authorized representative of the applicant, I hereby certify that the applicant will comply with the above certifications.

1. Grantee Name and Address:

Surprise Police Department
14250 W. Statler Plaza, Suite 103
Surprise, Arizona 85374

2. Application Number and/or Project Name

3. Grantee IRS/Vendor Number

4. Typed Name and Title of Authorized Representative

Benny Piña, Police Chief

5. Signature

6. Date

RESOLUTION # 2023-06

A RESOLUTION OF THE MAYOR AND COUNCIL OF THE CITY OF SURPRISE, ARIZONA AUTHORIZING THE CITY TO ENTER INTO AN AGREEMENT WITH THE U.S. DEPARTMENT OF JUSTICE, DRUG ENFORCEMENT ADMINISTRATION ACCEPTING FUNDING AND AMENDING THE FISCAL YEAR 2023 BUDGET BY MOVING BUDGET AUTHORITY OF $39,700 FROM CONTINGENCY WITHIN THE GRANTS FUND TO PROJECT G31245 FFY23 DEA TASK FORCE FOR OVERTIME EXPENSES.

WHEREAS, pursuant to Arizona Revised Statute §13-3872, *et seq.,* the City of Surprise has the authority to enter into agreement with other governmental entities for the purposes set forth within;

WHEREAS, there is evidence that trafficking in narcotics and dangerous drugs exists throughout the state and in the Phoenix area;

WHEREAS, such illegal activity has a substantial and detrimental effect on the health and general welfare of the people of the State of Arizona and the City of Surprise;

WHEREAS, the parties desire to enter into an agreement in order to continue the partnership already in place to combat these issues;

WHEREAS, the Drug Enforcement Administration, as part of their commitment to this partnership desires to reimburse overtime incurred as a result of this partnership for two full-time investigators up to the amount of $19,840 per position and the City of Surprise desires to accept such funding;

WHEREAS, this agreement provides overtime funding for two officers assigned to the DEA Task Force for the federal fiscal year 2022-2023 and such funding was not included in the budget as the IGA was not executed at that time;

WHEREAS, the FY2023 budget was adopted by Council Resolution #2022-56 on June 7, 2022;

WHEREAS, execution of this agreement will necessitate a budget amendment; and

WHEREAS, the City of Surprise Administrative Policies requires the approval of the Mayor and Council for budget amendments of this nature.

NOW, THEREFORE, BE IT RESOLVED by the Mayor and Council of the City of Surprise, Arizona, as follows:

Section 1. That the statements and schedules attached as *Exhibit A* and incorporated by reference are adopted, amending the budget of the City of Surprise, Arizona for the fiscal year July 1, 2022 through June 30, 2023.

Section 2. The Agreement between the City of Surprise and the U.S. Department of Justice, Drug Enforcement Administration, attached as Exhibit B, is approved.

Section 3. The City Manager, or his designee, is hereby authorized to execute and submit all documents and other necessary or desirable instruments in connection with said agreement.

APPROVED AND ADOPTED this _____day of _____, 2023.

_____
Skip Hall, Mayor

Attest:

_____
Sherry Aguilar, City Clerk

Approved as to form:

_____
Robert Wingo, City Attorney

Resolution #2023-06
RFLS #8641
12/22

RESOLUTION # 2023-06
Exhibit A

1. Appropriation - The allocation below represents a movement of budget authority in the amount of $39,700 from Contingency within the Grants Fund to cover overtime expenses incurred for two full-time investigators. This action represents a transfer of spending authority and does not increase or decrease the total adopted citywide expenditure budget.

Fund	Department	Project/Category	Rev/ Exp	Current Budget	Increase/ (Decrease)	Amended Budget
Grants	Police	#G31245 FFY23 DEA Task Force	E	-	39,700	39,700
Grants	Police	#G31245 FFY23 DEA Task Force	R	-	39,700	39,700
Grants/Contingency	General Operations	Contingency	E	2,996,600	(39,700)	2,956,900
Grants/Contingency	General Operations	Other	R	3,003,400	(39,700)	2,963,700
			Expense Total		**-**	**2,996,600**
			Revenue Total		**-**	**3,003,400**

RESOLUTION 2023-06
EXHIBIT B

AGREEMENT BETWEEN
THE CITY OF SURPRISE AND U.S. DEPARTMENT OF JUSTICE,
DRUG ENFORCEMENT ADMINISTRATION

(BEGINS ON THE NEXT PAGE)

CITY OF SURPRISE
Regular City Council Meeting

Council Meeting Date: January 17, 2023 Contact Person: Chris Sexton
Submitting Department: Community Development District: District 1
Staff Recommendations:

Consent: Yes Regular: No Public Hearing: No Report/Discussion: No

Agenda Wording:
Consideration and action pertaining to approval of the Final Plat entitled, "Windstone Ranch Phase 1" and received on September 19, 2022, a property generally located at the northeast corner of Happy Valley Road and 151st Avenue; Case FS21-1007.

Motion:
I move to approve the Final Plat entitled, "Windstone Ranch Phase 1" and dated received on September 19, 2022.

Background:
The subject property encompasses approximately 60 acres of vacant land which includes a portion of the Tierra Verde East PAD and Windstone Ranch (RM-9 PUD). However, FS21-1007 is a request by Michael Park of Atwell for the approval of Phase 1 of the Windstone Ranch Final Plat. Phase I of Windstone Ranch Final Plat consists of the development of approximately 29.14 acres resulting in 104 single family residential lots and a density of 3.56 DU/AC.

Objective Analysis:
The subject Final Plat meets the requirements of the Tierra Verde PAD and the Windstone Ranch PUD, in addition to other requirements as set forth in the municipal code. All city reviewing departments have reviewed the request and offered no concerns.

Policy Compliant:
The Surprise General Plan 2035 shows the subject property as lying within the Neighborhood Character Area, which supports residential development of up to 8 DU/Ac in a suburban neighborhood. At 3.56 DU/Ac, the project is consistent with the General Plan in this regard.

Financial Impact:
While this item does not have an immediate or direct financial impact, ongoing development activity in the City will inevitably have a future financial impact as additional resources are needed to provide City Services.

Budget Impact:
There is no anticipated budget impact associated with this item.
FTE Impact:
This item does not have an impact on current staffing levels.

ATTACHMENTS:
1. 00 - FS21-1007 Windstone Ranch Phase I Final Plat - Staff Report
2. 01 - FS21-1007 Windstone Ranch Ph I - Vicinity Map
3. 02 - FS21-1007 Windstone Ranch Ph I - Zoning Map
4. 03 - FS21-1007_4_19000032_Windstone Ph1_Final Plat_2022-12-05
5. 04 - FS21-1007 Windstone Ranch Ph I Final Plat - Landscape Plan
6. 05 - FS21-1007 Windstone Ranch Ph I Final Plat - Luke AFB Letter
7. FS21-1007 Windstone Ranch Phase I Final Plat - Powerpoint

FINAL PLAT

REPORT TO THE CITY COUNCIL

Case:	**FS21-1007**
Project Name:	Windstone Ranch Phase I - Final Plat
Council District:	1 - Acacia
City Council Date:	**January 17, 2023**
Planner:	Chris Sexton, Planner II

Owner:	Lennar Arizona Construction Inc.
Applicant:	Michael Park with Atwell, LLC
Request:	Final Plat for a 104-lot single-family residential subdivision
Site Location:	Generally located north of Happy Valley Road and east of 151st Avenue
Site Size:	29.14 acres (approx.) Phase 1
Density:	3.56 DU/AC
General Plan Conformance:	The proposal is consistent with the Surprise General Plan 2035

Findings:

- The proposed Final Plat is consistent with the Tierra Verde East PAD and RM-9 PUD (Windstone Ranch) zoning districts.
- The proposed Final Plat is consistent with the Preliminary Plat approved under case FS20-596.
- The proposed Final Plat is consistent with the applicable City of Surprise regulations.
- The reviewing agencies have indicated no objections to the request.

Alternative Actions:

Approve – Approval of the proposed Final Plat will allow the applicant the ability to subdivide the property as proposed.

Deny – Denial of the requested Final Plat will prevent the applicant from subdividing the property as proposed.

PROJECT DESCRIPTION:

The subject property overall encompasses approximately 60 acres of vacant land which includes a portion of the Tierra Verde East PAD, and Windstone Ranch (RM-9 PUD). However, FS21-1007 is a request by Michael Park of Atwell for the approval of Phase 1 of the Windstone Ranch Final Plat. Phase I of Windstone Ranch Final Plat consists of the development of approximately 29.14 acres resulting in 104 single family residential lots and a density of 3.56 DU/AC.

SURROUNDING LAND ZONING:

The following map depicts the existing zoning of the subject site and its surrounding:

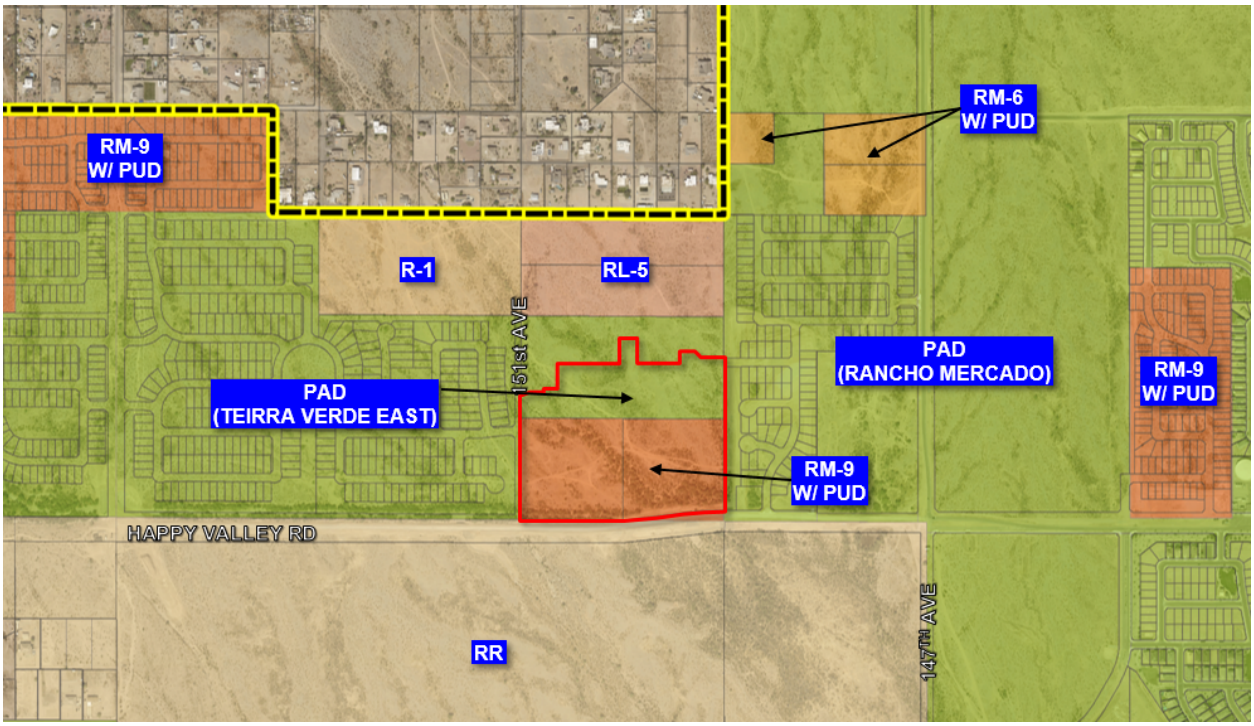

R-1 (Single-family residential)	RL-5 PUD (Saddlehorn Ranch)	Rancho Mercado PAD (R1-8 RUPD)
Tierra Verde East PAD (LDR)	**Tierra Verde East PAD (LDR)** **RM-9 PUD(Windstone Ranch)**	Rancho Mercado PAD (R1-8 RUPD)
Rural Residential (RR)	Rural Residential (RR)	Rancho Mercado PAD (R1-8 RUPD)

BACKGROUND:

March 23, 2006: A portion of the subject property was added to the Tierra Verde East PAD as part of a rezoning application (Case PADA06-455) and rezoned from R1-43 to Planned Area Development (PAD) under Ordinance 07-50.

April 2, 2019: A portion of the subject property (Saddlehorn Ranch) was annexed under Ordinance 2019-08 and rezoned from RR to RL-5 PUD under Ordinance 2019-05.

May 5, 2020: A portion of the subject property (Windstone Ranch) rezoned from RR to RM-9 PUD under Ordinance 2020-11.

July 15, 2021: The Planning and Zoning Commission passed a motion to recommend approval of the preliminary plat to the Mayor and City Council under case FS20-596.

August 17, 2021: The Mayor and City Council approved the preliminary plat, under case FS20-596.

December 16, 2021: The applicant applied for the final plat under case FS21-1007.

ANALYSIS AND DISCUSSION:

The subject request involves three (3) parcels within the Windstone Ranch PUD and Tierra Verde East PAD designated as single-family residential. The proposed lots for Phase 1 will be a range from a minimum 45' to 60' lot width and will range from 110' and 115' in lot depth. There are a total of 104 lots over approximately 29 acres for a density of 3.56 DU/Ac.

Access

Access to the project will be from Happy Valley Road via 151st Avenue located along the westerly portion of the site where there is one access point to serve Phase 1. In addition, a second access point will be from Bronco Trail to the east through Rancho Mercado.

Open Space & Landscaping

The applicant, overall, proposes 10.4 acres (34.4%) of open space, exceeding the minimum 20% requirement of the (SUDC) comprising of 7.3 acres of active open space and 3.1 acres of passive open space.

Amenities

The Final Plat will include the development of three (3) neighborhood parks with large amenities along a crisscross open space corridor trail that balances active and passive open space tracts, all to be maintained by the Homeowners Association. The primary amenity areas conform to SUDC 122-137(o) including a ramada, seating areas, and tot lot area. The local trail system will connect to the trail system in the adjacent Rancho Mercado and Tierra Verde East parcels.

Walls

Primary Theme Walls will consist of 6' high smooth-face CMU panels with a split-face cap, punctuated by stone-veneer columns. View walls will consist of 4'6" wrought iron fence atop dooley walls and 6' dooley walls around the trails system internal to the site.

Utility and Services Table:

Water:	City of Surprise
Wastewater:	City of Surprise
School District:	Dysart Unified

Conformance with Adopted Plans:

The Surprise General Plan 2035 shows the property lying within the Neighborhood Character Area, which supports residential development up to 8 DU/Ac or more.

Reviewing Agencies:

In addition to the standard city reviewing agencies, Maricopa County, Arizona Department of Transportation, Maricopa Water District, and Luke AFB were included in the routing of this request, who have indicated no objections to the request.

Summary:

The applicant seeks a Final Plat across the subject property. The proposed development is compatible with the neighboring land uses and the amenities included will provide recreational opportunities for the neighborhood residents.

Findings:

- The proposed Final Plat is consistent with the Tierra Verde East PAD and Ranch PUD zoning districts.
- The proposed Final Plat is consistent with the Preliminary Plat approved under case FS20-596.
- The proposed Final Plat is consistent with the applicable City of Surprise regulations.

- The reviewing agencies have indicated no objections to the request.

Attachments:

01 Vicinity Map
02 Zoning Map
03 Final Plat
04 Final Landscape Plan
05 Luke AFB comments

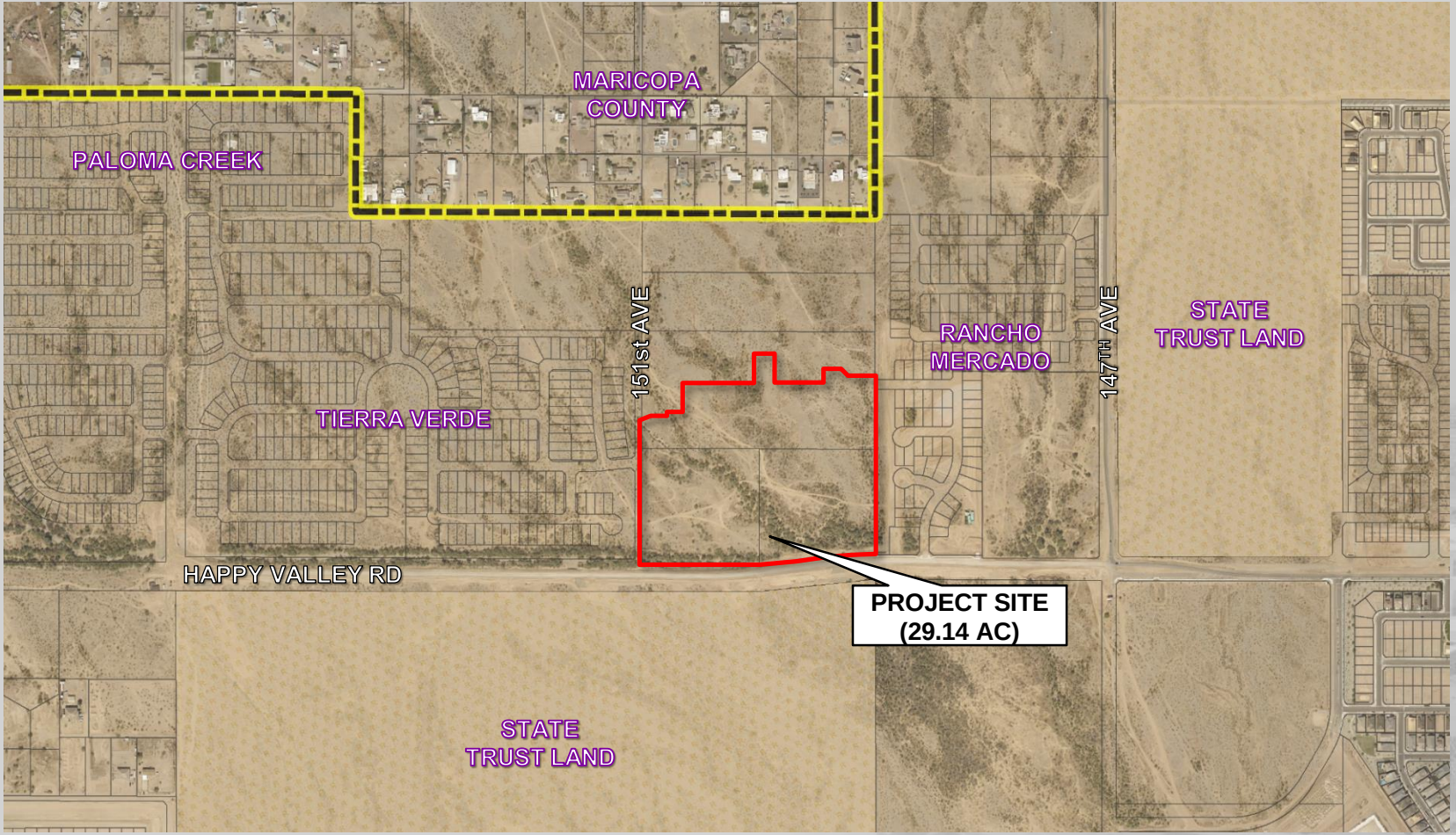

FS21-1007 VICINITY MAP

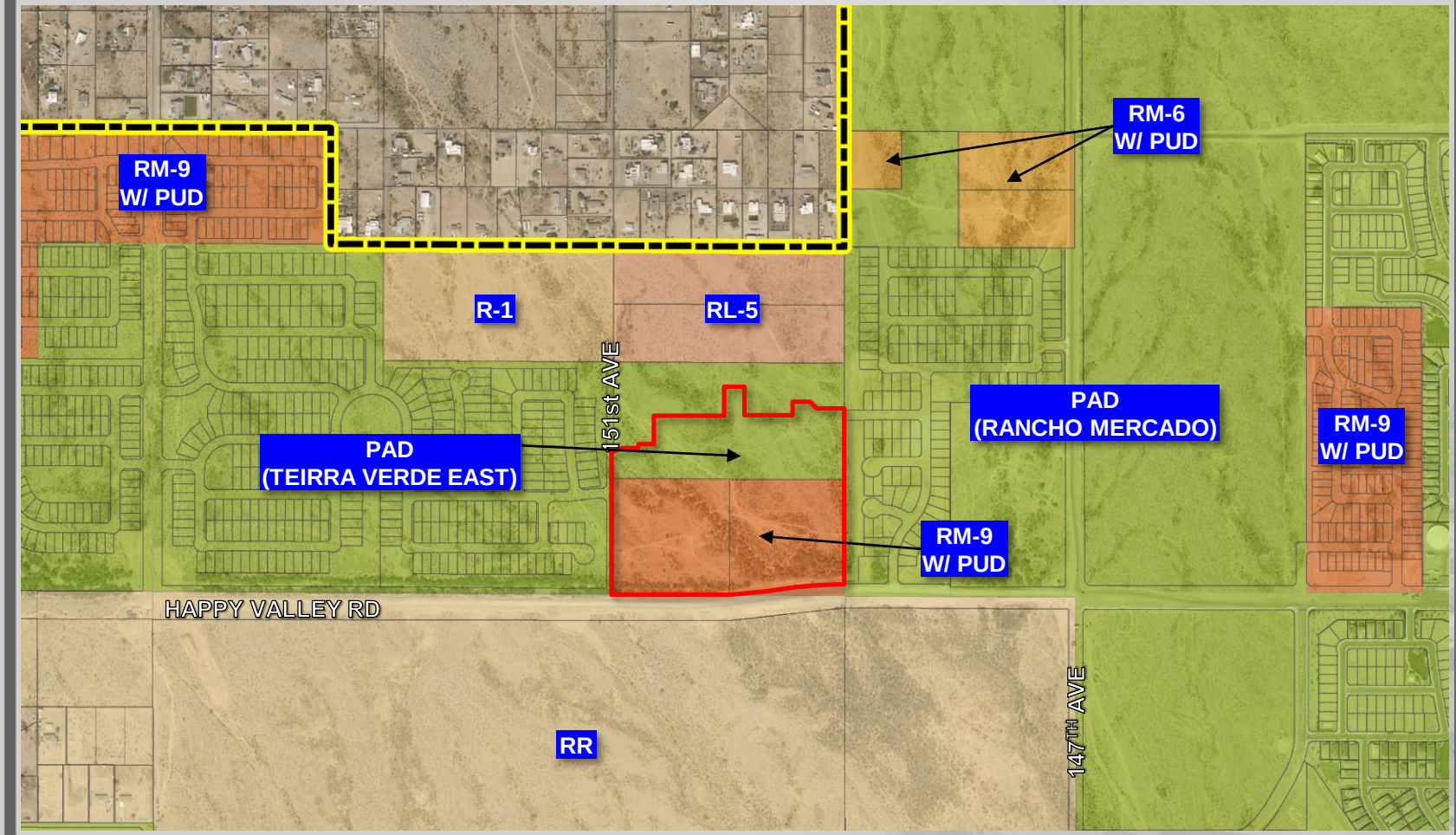

FS21-1007 ZONING MAP

COPYRIGHT © 2022 ATWELL LLC NO REPRODUCTION SHALL BE MADE WITHOUT THE PRIOR WRITTEN CONSENT OF ATWELL LLC

FINAL PLAT
OF
WINDSTONE RANCH
"PHASE 1"

A PORTION OF THE SOUTHEAST QUARTER OF SECTION 5, TOWNSHIP 4 NORTH, RANGE 1 WEST, OF THE GILA AND SALT RIVER BASE AND MERIDIAN, CITY OF SURPRISE, MARICOPA COUNTY, ARIZONA

DEDICATION

STATE OF ARIZONA:)
) SS
COUNTY OF MARICOPA:)

KNOW ALL PERSONS BY THESE PRESENTS:

1. THAT R-HEARTHSTONE LOT OPTION POOL 04, L.P., HEREINAFTER "OWNER", HAS SUBDIVIDED UNDER THE NAME "WINDSTONE RANCH PHASE 1", LOCATED WITHIN A PORTION OF THE SOUTHEAST QUARTER OF SECTION 5, TOWNSHIP 4 NORTH, RANGE 1 WEST OF THE GILA AND SALT RIVER BASE AND MERIDIAN, CITY OF SURPRISE, MARICOPA COUNTY, ARIZONA AND DOES HEREBY DECLARE THAT THIS PLAT SETS FORTH THE LOCATION AND GIVES THE DIMENSIONS OF EACH LOT, TRACT, STREET, AND EASEMENT CONSTITUTING SAME, AND THAT EACH LOT, TRACT, STREET, AND EASEMENT SHALL BE KNOWN BY THE NUMBER, LETTER, AND/OR NAME GIVEN TO EACH RESPECTIVELY AS SHOWN ON THIS FINAL PLAT.
2. OWNER HEREBY DEDICATES TO THE CITY OF SURPRISE FEE TITLE TO ALL PUBLIC RIGHTS-OF-WAY AS SHOWN ON THE FINAL PLAT.
3. ALL IMPROVEMENTS, FOR STREETS AND PUBLIC UTILITIES OWNED AND OPERATED BY THE CITY, INSTALLED OR CONSTRUCTED BY OWNER WITHIN THE PUBLIC RIGHTS-OF-WAY, THE EASEMENTS, OR ANY TRACTS OR PARCELS HEREBY DEDICATED TO THE CITY OF SURPRISE SHALL BE DEEMED TO HAVE BEEN DEDICATED BY OWNER TO THE CITY UPON THEIR COMPLETION; HOWEVER, SUCH TRANSFER SHALL NOT OCCUR UNTIL THE CITY COUNCIL FOR THE CITY OF SURPRISE MANIFESTS ITS ACCEPTANCE BY SEPARATE FORMAL COUNCIL ACTION.
4. OWNER HEREBY GRANTS TO THE CITY OF SURPRISE A PERPETUAL NON-EXCLUSIVE EASEMENT OVER, UNDER, UPON, AND ACROSS ALL AREAS DESIGNATED ON THE PLAT AS WATER/SEWER LINES, MANHOLES, FIRE HYDRANTS AND WATER METERS FOR THE PURPOSE OF INSTALLING, CONSTRUCTING, MAINTAINING, REPAIRING, REPLACING, AND UTILIZING THE WATER/SEWER LINES, MANHOLES, FIRE HYDRANTS AND WATER METERS
5. OWNER HEREBY GRANTS TO THE UNITED STATES OF AMERICA DEPARTMENT OF THE AIR FORCE ("USAF") AN AVIGATION EASEMENT OVER AND ACROSS THIS FINAL PLAT AND EVERY LOT AND PARCEL THEREOF, WHICH EASEMENT SHALL INCLUDE, BUT NOT BE LIMITED TO, THE RIGHT OF FLIGHT OF AIRCRAFT OVER THIS FINAL PLAT, TOGETHER WITH ITS ATTENDANT NOISE, VIBRATIONS, FUMES, DUST, FUEL AND LUBRICANT PARTICLES, AND ALL OTHER EFFECTS THAT MAY BE CAUSED BY THE OPERATION OF AIRCRAFT LANDING AT, OR TAKING OFF FROM, OR OPERATING AT OR ON LUKE AIR FORCE BASE AND AUXILIARY FIELD.
6. OWNER HEREBY GRANTS TO THE CITY OF SURPRISE AN ODOR EASEMENT OVER, UPON AND ACROSS THIS FINAL PLAT AND EVERY LOT AND PARCEL THEREOF, WHICH EASEMENT SHALL INCLUDE, BUT NOT BE LIMITED TO, THE RIGHT TO INVADE WITH ODORS, FUMES, SMELLS, AND PHYSICAL AIRBORNE PARTICULATES CAUSED BY THE OPERATION AND MAINTENANCE OF THE CITY'S WATER RECLAMATION FACILITY.
7. THE EASEMENTS GRANTED WITHIN THIS DEDICATION ARE PERMANENT AND PERPETUAL AND SHALL RUN WITH THE LAND AND BE BINDING UPON OWNER AND ITS HEIRS, ASSIGNS, AND SUCCESSORS IN INTEREST TO THIS FINAL PLAT OR ANY PARCEL THEREOF.
8. OWNER HEREBY WARRANTS AND REPRESENTS TO THE CITY OF SURPRISE THAT IT IS THE SOLE OWNER OF THE PROPERTY COVERED BY THIS FINAL PLAT, AND THAT EVERY LENDER, EASEMENT HOLDER OR OTHER PERSON OR ENTITY HAVING ANY INTEREST THAT IS ADVERSE TO OR INCONSISTENT WITH THE FOREGOING DEDICATION, OR ANY OTHER REAL PROPERTY INTEREST CREATED OR TRANSFERRED BY THIS FINAL PLAT, HAS CONSENTED TO OR JOINED IN THIS FINAL PLAT AS EVIDENCED BY INSTRUMENTS WHICH ARE RECORDED WITH THE MARICOPA COUNTY RECORDERS OFFICE OR WHICH OWNER WILL RECORD NOT LATER THAN THE DATE ON WHICH THIS FINAL PLAT IS RECORDED.
9. OWNER HEREBY GRANTS TO THE CITY OF SURPRISE A PERPETUAL NON-EXCLUSIVE EASEMENT OVER, UPON AND ACROSS THE AREAS DESIGNATED AS SIGHT VISIBILITY TRIANGLES FOR THE PURPOSE OF ENSURING THAT THESE AREAS REMAIN FREE OF SIGHT VISIBILITY OBSTRUCTIONS.
10. THE VEHICULAR NON ACCESS EASEMENTS " VNAE " ARE HEREBY DEDICATED TO THE WINDSTONE RANCH COMMUNITY ASSOCIATION, ITS SUCCESSORS AND ASSIGNS AND IS INTENDED TO PREVENT VEHICULAR TRAFFIC BETWEEN TRACTS AND LOTS WITH THE EXCEPTION OF PUBLIC UTILITY USES. SAID " VNAE " AS DEDICATED HEREON WILL CROSS PUBLIC UTILITY EASEMENTS "PUE" ALSO GRANTED HEREON, IN MULTIPLE LOCATIONS. THESE " VNAE " ARE NOT INTENDED TO PREVENT AUTHORIZED AGENTS OF THE PUBLIC UTILITY COMPANIES FROM CROSSING SAID " VNAE " DURING THE COURSE OF INSTALLATION, USE, MAINTENANCE AND REPAIR OF THE UTILITIES LOCATED IN SAID PUBLIC UTILITY EASEMENT "PUE".
11. ALL TRACTS ARE NOT DEDICATED TO THE PUBLIC, BUT ARE PLATTED AS COMMON PROPERTY FOR THE USE AND ENJOYMENT OF THE WINDSTONE RANCH COMMUNITY ASSOCIATION, AS MORE FULLY SET FORTH IN THE DECLARATION OF COVENANTS, CONDITIONS AND RESTRICTIONS.
12. TRACTS PLATTED HEREON ARE DEDICATED FOR THE PURPOSES AS NOTED IN THE TRACT TABLE ON THIS FINAL PLAT AND SHALL BE MAINTAINED BY WINDSTONE RANCH COMMUNITY ASSOCIATION.
13. OWNER HEREBY GRANTS TO THE CITY OF SURPRISE A PERPETUAL CROSS ACCESS EASEMENT ACROSS THE FINAL PLAT INCLUDING ROADS AND STREETS, OPEN SPACES, COMMUNITY FACILITIES, TRACTS, SIDEWALKS, DRAINAGE BASINS AND ANY PROPERTY WITHIN THE PLAT OWNED BY THE HOMEOWNERS ASSOCIATION FOR THE PURPOSE OF PROVIDING CONTINUOUS AND UNINTERRUPTED INGRESS AND EGRESS FOR EMERGENCY VEHICLES.
14. OWNER HEREBY GRANTS TO THE CITY OF SURPRISE A PERPETUAL EASEMENT ACROSS THE FINAL PLAT INCLUDING ROADS AND STREETS, OPEN SPACES, COMMUNITY FACILITIES, TRACTS, SIDEWALKS, DRAINAGE BASINS AND ANY PROPERTY WITHIN THE FINAL PLAT OWNED BY THE HOMEOWNERS ASSOCIATION FOR THE PURPOSE OF PROVIDING CONTINUOUS AND UNINTERRUPTED INGRESS AND EGRESS FOR TRASH COLLECTION VEHICLES.
15. OWNER HEREBY GRANTS TO THE CITY OF SURPRISE A PERPETUAL NON-EXCLUSIVE PEDESTRIAN ACCESS AND SIDEWALK CONSTRUCTION AND MAINTENANCE EASEMENT OVER, UPON, AND ACROSS THE AREAS DESIGNATED AS SIDEWALK EASEMENTS AS SHOWN ON THE PLAT.
16. OWNER HEREBY GRANTS TO THE CITY OF SURPRISE, A PUBLIC RECREATION/TRAIL EASEMENT FOR PEDESTRIAN ACCESS, EQUINE ACCESS, BICYCLING, AND OTHER NON-MOTORIZED FORMS OF ACCESS OVER AND ACROSS OWNER'S PROPERTY, INCLUDING THE RIGHT OF INGRESS AND EGRESS ALONG AND ACROSS THE EASEMENT PREMISES, AS SHOWN ON THIS PLAT.
17. OWNER HEREBY GRANTS TO THE PUBLIC AN EASEMENT FOR RECREATION OVER, UPON, AND ACROSS THOSE AREAS DESIGNATED AS RECREATION TRAILS OR AREAS FOR THE PURPOSE OF ALLOWING THE PUBLIC ACCESS TO THE TRAIL SYSTEM.

IN WITNESS WHEREOF, OWNER HAS HEREUNTO CAUSED ITS PARTNERSHIP NAME TO BE SIGNED AND ITS PARTNERSHIP SEAL TO BE AFFIXED BY THE UNDERSIGNED, DULY AUTHORIZED OFFICER THIS 30 DAY OF NOVEMBER, 2022.

R-HEARTHSTONE LOT OPTION POOL 04, L.P., A DELAWARE LIMITED PARTNERSHIP

BY: R-HEARTHSTONE PBLOJV GP, LLC, A DELAWARE LIMITED LIABILITY COMPANY
GENERAL PARTNER

BY: _____
STEVEN C. PORATH, AUTHORIZED PERSON

NOTARY ACKNOWLEDGEMENT

STATE OF CALIFORNIA

COUNTY OF LOS ANGELES

ON November 30, 2022, BEFORE ME, Karen Shornback, Notary Public

PERSONALLY APPEARED Steven C Porath, WHO PROVED TO ME ON THE BASIS OF SATISFACTORY EVIDENCE TO BE THE PERSON(S) WHOSE NAME(S) IS/ARE SUBSCRIBED TO THE WITHIN INSTRUMENT AND ACKNOWLEDGED TO ME THAT HE/SHE/THEY EXECUTED THE SAME IN HIS/HER/THEIR AUTHORIZED CAPACITY(IES), AND THAT BY HIS/HER/THEIR SIGNATURE(S) ON THE INSTRUMENT THE PERSON(S), OR THE ENTITY UPON BEHALF OF WHICH THE PERSON(S) ACTED, EXECUTED THE INSTRUMENT.

I CERTIFY UNDER PENALTY OF PERJURY UNDER THE LAWS OF THE STATE OF CALIFORNIA THAT THE FOREGOING PARAGRAPH IS TRUE AND CORRECT.

WITNESS MY HAND AND OFFICIAL SEAL.

Karen Shornback
SIGNATURE

KAREN S. HORNBACK
Notary Public - California
Ventura County
Commission # 2413766
My Comm. Expires Aug 24, 2026

(SEAL)

100 YEAR ASSURED WATER SUPPLY LANGUAGE

THE AREA PLATTED HEREON LIES WITHIN THE DOMESTIC WATER SERVICE AREA OF CITY OF SURPRISE DESERT OASIS PUBLIC WATER SYSTEM 04-07-523 WHICH IS DESIGNATED AS HAVING AN ASSURED WATER SUPPLY PURSUANT A.R.S. § 45-576.

WINDSTONE RANCH COMMUNITY ASSOCIATION RATIFICATION

BY THIS RATIFICATION, Katie Voigt, DULY ELECTED PRESIDENT OF THE WINDSTONE RANCH COMMUNITY ASSOCIATION ACKNOWLEDGES THE RESPONSIBILITIES DEDICATED HEREON.

BY: Katie Voigt ITS President

NOTARY ACKNOWLEDGEMENT

STATE OF ARIZONA:)
) SS
COUNTY OF MARICOPA:)

ON THIS 29th DAY OF November, 2022, Katie Voigt PERSONALLY APPEARED BEFORE ME, THE UNDERSIGNED NOTARY PUBLIC, WHO ACKNOWLEDGED HIMSELF/HERSELF TO BE THE President OF THE WINDSTONE RANCH COMMUNITY ASSOCIATION, AND THAT HE/SHE, AS President, EXECUTED THIS INSTRUMENT FOR THE PURPOSES HEREIN CONTAINED.

IN WITNESS WHEREOF, I HEREUNTO SET MY HAND AND OFFICIAL SEAL.

BY: Vickey Morris MY COMMISSION EXPIRES 11/13/2026
NOTARY PUBLIC DATE

VICKEY MORRIS
Notary Public - State of Arizona
MARICOPA COUNTY
Commission # 636381
Expires November 13, 2026

APPROVALS

CITY OF SURPRISE ENGINEER APPROVAL

DATA ON THIS PLAT REVIEWED AND APPROVED THIS _____ DAY OF _____, 2022,
BY THE CITY ENGINEER OF SURPRISE, ARIZONA.

APPROVED_____ _____
CITY ENGINEER DATE

CITY OF SURPRISE COUNCIL APPROVAL

APPROVED BY THE CITY COUNCIL OF THE CITY OF SURPRISE, ARIZONA.
THIS _____ DAY OF _____, 2022.

ATTEST:

_____ _____
MAYOR DATE

_____ _____
CITY CLERK DATE

AREA CALCULATIONS

TRACTS	454,838 SQ.FT.	10.44 AC
LOTS = 104	547,476 SQ.FT.	12.57 AC
RIGHT OF WAY	266,865 SQ.FT.	6.13 AC
TOTAL	1,269,179 SQ.FT.	29.14 AC

SHEET INDEX

DESCRIPTION	SHEET NO
COVER SHEET	1
KEY MAP, LEGAL DESCRIPTION	2
PLAT SHEETS	3-6

PUBLIC NOTICE

THE LOTS DEPICTED ON THIS PLAT ARE LOCATED WITHIN THE VICINITY OF LUKE AIR FORCE BASE AND MAY BE SUBJECT TO OVERFLIGHTS BY JET AIRCRAFT. ALL STRUCTURES WITHIN THIS PLAT SHALL BE CONSTRUCTED IN COMPLIANCE WITH THE SOUND ATTENUATION STANDARDS ADOPTED BY THE CITY OF SURPRISE. A MAP DEPICTING THE MOST CURRENT ADOPTED MAG NOISE CONTOURS IN RELATION TO THIS PLAT SHALL BE DISPLAYED IN ALL SALES OFFICES. ADDITIONAL INFORMATION MAY BE OBTAINED BY CONTACTING THE CITY OF SURPRISE COMMUNITY DEVELOPMENT DEPARTMENT.

OWNER

R-HEARTHSTONE LOT OPTION POOL 04, L.P.,
23975 PARK SORRENTO
SUITE 220
CALABASAS, CA 91302
PHONE: 818-385-3697
CONTACT: STEVEN C. PORATH

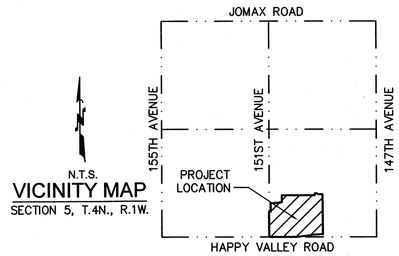

N.T.S.
VICINITY MAP
SECTION 5, T.4N., R.1W.

RELEASE OF LIABILITY

1. R-HEARTHSTONE LOT OPTION POOL 04, L.P., OWNER DOES HEREBY (1) RELEASE AND DISCHARGE THE UNITED STATES OF AMERICA DEPARTMENT OF THE AIR FORCE (USAF) AND THE CITY OF SURPRISE, AND (2) INDEMNIFY, DEFEND, AND HOLD HARMLESS THE USAF AND THE CITY OF SURPRISE, OF AND FROM ANY LIABILITY FOR ANY AND ALL CLAIMS FOR DAMAGES OF ANY KIND TO PERSONS OR PROPERTY THAT MAY ARISE AT ANY TIME IN THE FUTURE OVER, OR IN CONNECTION WITH AIRCRAFT OVERFLIGHTS FROM AIRCRAFT UTILIZING LUKE AIR FORCE BASE, WHETHER SUCH DAMAGE SHALL ORIGINATE FROM NOISE, VIBRATION, FUMES, DUST, FUEL AND LUBRICANT PARTICLES, AND ALL OTHER EFFECTS THAT MAY BE CAUSED BY THE OPERATION OF AIRCRAFT LANDING AT, OR TAKING OFF FROM, OR OPERATING AT OR ON LUKE AIR FORCE BASE AND ITS AUXILIARY FIELDS. THIS INSTRUMENT SHALL RUN WITH THE LAND AND BE BINDING UPON OWNER AND ITS HEIRS, ASSIGNS, AND SUCCESSORS IN INTEREST TO THIS PLAT OR ANY PARCEL OR LOT THEREOF. THIS INSTRUMENT DOES NOT RELEASE THE USAF FROM LIABILITY FOR DAMAGE OR INJURY TO PERSON OR PROPERTY CAUSED BY FALLING AIRCRAFT OR FALLING PHYSICAL OBJECTS FROM AIRCRAFT, EXCEPT AS STATED HEREIN WITH RESPECT TO NOISE, FUMES, DUST, FUEL, AND LUBRICANT PARTICLES.
2. THE CITY OF SURPRISE AGREES TO INDEMNIFY R-HEARTHSTONE LOT OPTION POOL 04, L.P., ITS OFFICERS, EMPLOYEES, AGENTS, CONTRACTORS OR THOSE OF AND ITS SUCCESSORS AND ASSIGNS, FOR ANY AND ALL DIRECT DAMAGES TO THE PERSONAL PROPERTY OR FOR PHYSICAL INJURY TO OR DEATH OF PERSONS OCCURRING ON THE AREA OF THIS EASEMENT CAUSED BY OR ARISING AS THE PROXIMATE RESULT OF THE ACTIVITIES OF THE CITY OF SURPRISE, EXCEPT FOR SUCH INJURY OR DAMAGES CAUSED BY OR ARISING SOLEY FROM THE NEGLIGENT, WILLFUL, MALICIOUS, OR GROSSLY NEGLIGENT CONDUCT OF R-HEARTHSTONE LOT OPTION POOL 04, L.P., ITS OFFICERS, EMPLOYEES, AGENTS, CONTRACTORS, OR THOSE OF ITS SUCCESSORS AND ASSIGNS THAT WAS THE DIRECT CAUSE OF THE INJURY TO THE USER.
3. R-HEARTHSTONE LOT OPTION POOL 04, L.P., OWNER HEREBY FURTHER AGREES TO INDEMNIFY, DEFEND, AND HOLD HARMLESS THE CITY OF SURPRISE FROM ANY AND ALL CLAIMS FOR DAMAGES OF ANY KIND TO PERSONS OR PROPERTY LOCATED WITHIN THE RIGHT OF WAY THAT MAY ARISE IN CONNECTION WITH THE USE OF THE SIDEWALKS LOCATED WITHIN THE RIGHT OF WAY, UNTIL SUCH TIME THE CITY OF SURPRISE HAS ACCEPTED THE SIDEWALKS.
4. R-HEARTHSTONE LOT OPTION POOL 04, L.P., OWNER DOES HEREBY (1) RELEASE AND DISCHARGE THE CITY OF SURPRISE, (2) INDEMNIFY, DEFEND, AND HOLD HARMLESS THE CITY OF SURPRISE, OF AND FROM ANY LIABILITY FOR ANY AND ALL CLAIMS FOR DAMAGES OF ANY KIND TO PERSONS OR PROPERTY THAT MAY ARISE AT ANY TIME IN THE FUTURE OVER, OR IN CONNECTION WITH THE AREAS LOCATED WITHIN THE NEWLY DEDICATED RIGHT-OF-WAY AS DEPICTED ON THIS PLAT UNTIL SUCH TIME THE RIGHT-OF-WAY IS IMPROVED TO CITY STANDARDS AND THOSE IMPROVEMENTS ARE APPROVED AND ACCEPTED BY THE CITY COUNCIL. THE MAINTENANCE OF THE AREA WITHIN ANY NEWLY DEDICATED RIGHT-OF-WAY AS SHOWN ON THIS PLAT SHALL BE THE RESPONSIBILITY OF THE ADJACENT OWNER/OR SUBSEQUENT ADJACENT OWNERS WITHIN THE BOUNDARY OF SAID PLAT UNTIL SUCH TIME THAT THE AREA WITHIN THE RIGHT-OF WAY IS IMPROVED TO CITY STANDARD AND ACCEPTED BY THE CITY OF SURPRISE.

GENERAL NOTES

1. IN ACCORDANCE WITH A.R.S. § 9-461.07, THE CITY OF SURPRISE HAS DETERMINED THAT ALL DEDICATIONS OCCURRING WITH THIS FINAL PLAT ARE IN CONFORMANCE WITH THE CITY OF SURPRISE GENERAL PLAN.
2. PURSUANT TO A.R.S. § 42-11102, THE CITY OF SURPRISE, A POLITICAL SUBDIVISION OF THE STATE OF ARIZONA, IS EXEMPT FROM ALL TAXES AND ASSESSMENTS BASED ON ASSESSED VALUE EXCEPT FOR SPECIAL DISTRICTS #14751 AND #14710, WHEN APPLICABLE.
3. NO ON-SITE GRADING OR EXCAVATION SHALL OCCUR WITHOUT FIRST OBTAINING A PERMIT FROM THE CITY OF SURPRISE.
4. HAPPY VALLEY ROAD WILL BECOME A 6 LANE MAJOR ARTERIAL AT SOME FUTURE POINT.
5. SPRINKLERS ARE REQUIRED IN ALL ONE AND TWO FAMILY DWELLINGS BUILT IN AREAS WHICH DO NOT HAVE AN ADEQUATE WATER SUPPLY OF 2000 GPM @ 2 HOURS @ 20 PSI RESIDUAL.
6. THIS FINAL PLAT IS IN SUBSTANTIAL CONFORMANCE WITH THE PRELIMINARY PLAT APPROVED BY THE CITY OF SURPRISE UNDER CASE FS20-596.
7. A PORTION OF THE PROPERTY IS LOCATED WITHIN THE AREA HAVING FLOOD ZONES "X", "A" AND"AE", BY THE FEDERAL EMERGENCY MANAGEMENT AGENCY, ON FLOOD INSURANCE RATE MAPS NO. 04013C1210L AND NO. 04013C1230L, WITH A DATE OF IDENTIFICATION OF OCTOBER 16, 2013, FOR COMMUNITY NO. 040053, IN MARICOPA COUNTY, STATE OF ARIZONA, WHICH IS THE CURRENT FLOOD INSURANCE RATE MAP FOR THE COMMUNITY IN WHICH SAID PROPERTY IS SITUATED.
8. THE MAINTENANCE OF LANDSCAPING WITHIN THE OPEN SPACES, LANDSCAPED TRACTS, RETENTION BASINS, AND PARKS SHALL BE THE RESPONSIBILITY OF THE OWNER OR THE HOMEOWNERS' ASSOCIATION FORMED BY THE OWNER.
9. THE MAINTENANCE OF LANDSCAPING WITHIN THE ADJACENT PUBLIC RIGHTS-OF-WAY, INCLUDING LANDSCAPED MEDIANS WITHIN COLLECTORS AND LOCAL STREETS, AND LANDSCAPED AREAS BETWEEN THE CURB AND THE DETACHED SIDEWALK, SHALL BE THE RESPONSIBILITY OF THE ADJACENT PROPERTY OWNER OR THE HOMEOWNERS' ASSOCIATION FORMED BY THE ADJACENT PROPERTY.
10. DEVELOPMENT STANDARDS ARE PER CITY OF SURPRISE CASE FS18-249 & FS19-263 OR AS SUBSEQUENTLY AMENDED.
11. LANDSCAPING MAINTENANCE OF THE MEDIANS WITHIN THE PUBLIC RIGHT-OF-WAY WITHIN ANY ARTERIAL OR PARKWAY STREET CLASSIFICATION SHALL BE THE RESPONSIBILITY OF THE CITY OF SURPRISE AFTER ACCEPTANCE.

BASIS OF BEARING

THE WEST-EAST, MID-SECTION LINE OF SECTION 5, TOWNSHIP 4 NORTH, RANGE 1 WEST, OF THE GILA AND SALT RIVER MERIDIAN WHICH BEARS S89°46'48"E A DISTANCE OF 5255.54' THIS POSITION WAS DERIVED FROM THE ESTABLISHED NGS POINTS DV0080 & AJ3867. PROJECT THEN SCALED TO GROUND AT A COMBINED SCALE FACTOR OF 1.00013766895 AND VERIFIED AGAINST GDACS BOOK 834, PG 1. HORIZONTAL ERROR = (0.04') ANGLE ERROR = (00°00'01")

SURVEYOR'S CERTIFICATION

I, JAMES G. SPRING, PLS 22282, HEREBY CERTIFY THAT I AM A PROFESSIONAL LAND SURVEYOR IN THE STATE OF ARIZONA; THAT THIS PLAT CONSISTING OF SIX SHEETS REPRESENTS A SURVEY PREPARED UNDER MY SUPERVISION DURING THE MONTH OF NOVEMBER, 2022; THAT THE SURVEY IS CORRECT AND ACCURATE TO THE BEST OF MY KNOWLEDGE AND BELIEF; THAT THE EXTERIOR BOUNDARY MONUMENTS ACTUALLY EXIST AS SHOWN AND ARE SUFFICIENT TO ENABLE THE SURVEY TO BE RETRACED.

JAMES G. SPRING, PLS 22282
ATWELL, LLC
4700 EAST SOUTHERN AVENUE
MESA, ARIZONA 85206

PROFESSIONAL LAND SURVEYOR
CERTIFICATE NO.
22282
JAMES G. SPRING
11/21/22
Date Signed
ARIZONA, U.S.A.

NOTE:
A.R.S. § 32-151 STATES THAT THE USE OF THE WORD "CERTIFY" OR "CERTIFICATION" BY A PERSON OR FIRM THAT IS REGISTERED OR CERTIFIED BY THE BOARD IS AN EXPRESSION OF PROFESSIONAL OPINION REGARDING FACTS OR FINDINGS THAT ARE SUBJECT OF THE CERTIFICATION AND DOES NOT CONSTITUTE AN EXPRESS OR IMPLIED WARRANTY OR GUARANTEE.

FS21-1007

ATWELL
866.850.4200 www.atwell-group.com
4700 E. SOUTHERN AVENUE
MESA, AZ 85206
480.218.8831

COUNTY: MARICOPA
SECTION: 5
TOWNSHIP: 4 NORTH
RANGE: 1 WEST

FINAL PLAT
WINDSTONE RANCH
"PHASE 1"
CITY OF SURPRISE, ARIZONA

NOVEMBER 2022

11-01-2022

REVISIONS:

ATWELL

PM.	J. SPRING
DR.	R. GILES
JOB NO.	19000032
	N.T.S.
	19000032 WINDSTONE PH1 FP.DWG
SHEET NO.	1 OF 6

K:\19000032 - WINDSTONE\DWG\SURVEY\PHASE 1\19000032 WINDSTONE PH1 FP.DWG SAVEDATE:11/23/2022 9:58 AM PLOTDATE:11/23/2022 9:59 AM

COPYRIGHT © 2022 ATWELL LLC NO REPRODUCTION SHALL BE MADE WITHOUT THE PRIOR WRITTEN CONSENT OF ATWELL LLC

LEGAL DESCRIPTION

LOCATED WITHIN A PORTION OF THE SOUTHEAST QUARTER OF SECTION 5, TOWNSHIP 4 NORTH, RANGE 1 WEST, OF THE GILA AND SALT RIVER BASE AND MERIDIAN, MARICOPA COUNTY, ARIZONA.

MORE PARTICULARLY DESCRIBED AS FOLLOWS:

COMMENCING AT A FOUND PK NAIL WITH TAG PLS 22282, ACCEPTED AS THE SOUTHEAST CORNER OF SECTION 5, TOWNSHIP 4 NORTH, RANGE 1 WEST FROM WHICH A FOUND PK NAIL WITH TAG STAMPED PLS 22282, ACCEPTED AS THE EAST QUARTER CORNER OF SECTION 5, TOWNSHIP 4 NORTH, RANGE 1 WEST, THEREOF BEARS N00°07'05"W A DISTANCE OF 2645.63 FEET;

THENCE, ALONG THE EAST LINE OF SAID SECTION 5, N00°07'05"W A DISTANCE OF 1064.37 FEET;

THENCE, LEAVING THE EAST LINE OF SAID SECTION 5, S89°52'55"W A DISTANCE OF 1312.02 FEET TO THE POINT OF BEGINNING;

THENCE, S00°02'31"E A DISTANCE OF 984.84 FEET TO THE BEGINNING OF A NON–TANGENT CURVE CONCAVE TO THE LEFT;

THENCE, WESTERLY ALONG SAID CURVE AN ARC LENGTH OF 258.44 FEET, WITH A RADIUS OF 1968.00 FEET AND THE RADIAL BEARING OF S00°22'12"W AND A CENTRAL ANGLE OF 07°31'27";

THENCE, S82°50'45"W A DISTANCE OF 388.63 FEET;

THENCE, N89°36'55"W A DISTANCE OF 670.00 FEET;

THENCE, N00°01'59"E A DISTANCE OF 620.95 FEET;

THENCE, S89°58'01"E A DISTANCE OF 40.00 FEET;

THENCE, N00°01'59"E A DISTANCE OF 45.13 FEET TO THE BEGINNING OF A TANGENT CURVE CONCAVE TO THE LEFT;

THENCE, NORTHERLY ALONG SAID CURVE AN ARC LENGTH OF 164.25 FEET, WITH A RADIUS OF 1800.00 FEET AND A CENTRAL ANGLE OF 05°13'42";

THENCE, N84°48'17"E A DISTANCE OF 106.53 FEET;

THENCE, S89°39'09"E A DISTANCE OF 120.00 FEET;

THENCE, N00°20'51"E A DISTANCE OF 14.87 FEET;

THENCE, S89°39'09"E A DISTANCE OF 55.00 FEET;

THENCE, N00°20'51"E A DISTANCE OF 170.63 FEET;

THENCE, S89°39'09"E A DISTANCE OF 431.00 FEET;

THENCE, N00°20'51"E A DISTANCE OF 120.00 FEET;

THENCE, S89°39'09"E A DISTANCE OF 64.00 FEET;

THENCE, S00°20'51"W A DISTANCE OF 120.00 FEET;

THENCE, S89°39'09"E A DISTANCE OF 311.00 FEET;

THENCE, N00°20'51"E A DISTANCE OF 44.80 FEET;

THENCE, S89°39'09"E A DISTANCE OF 55.00 FEET;

THENCE, S44°53'07"E A DISTANCE OF 28.17 FEET;

THENCE, N89°52'55"E A DISTANCE OF 116.33 FEET TO THE POINT OF BEGINNING.

LEGEND

	SUBDIVISION BOUNDARY
	RIGHT OF WAY LINE
	EXISTING RIGHT OF WAY LINE
	CENTERLINE
	EXISTING EASEMENT LINE
	PROPOSED EASEMENT LINE
	SECTION LINE
	ALIQUOT SECTION LINE
⧋	SUBDIVISION CORNER TO BE SET
○	FOUND MONUMENT AS NOTED
⊙	CENTERLINE MONUMENT (TO BE SET BY CITY OF SURPRISE STANDARDS)
①	30'x30' SIGHT VISIBILITY EASEMENT
VNAE	VEHICULAR NON–ACCESS EASEMENT
PUE	PUBLIC UTILITY EASEMENT
M.O.D.	MAP OF DEDICATION
M.C.R.	MARICOPA COUNTY RECORDER
R/W	RIGHT–OF–WAY
FBSL	FRONT BUILDING SETBACK LINE
D	DELTA
C1	CURVE TABLE NUMBER
L1	LINE TABLE NUMBER
Ⓡ	RADIAL BEARING
FP	FINAL PLAT
DOC.	DOCUMENT

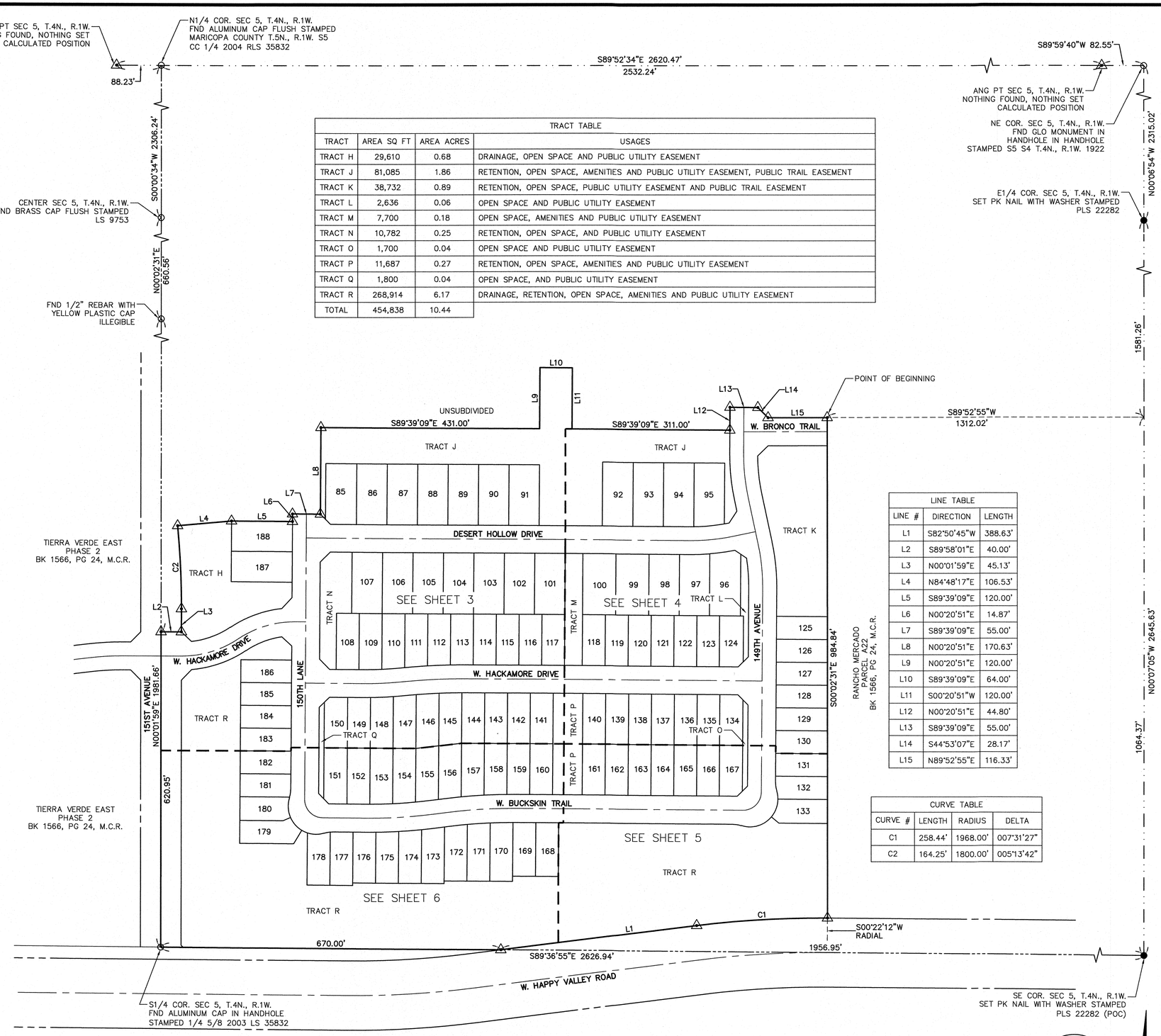

TRACT TABLE			
TRACT	AREA SQ FT	AREA ACRES	USAGES
TRACT H	29,610	0.68	DRAINAGE, OPEN SPACE AND PUBLIC UTILITY EASEMENT
TRACT J	81,085	1.86	RETENTION, OPEN SPACE, AMENITIES AND PUBLIC UTILITY EASEMENT, PUBLIC TRAIL EASEMENT
TRACT K	38,732	0.89	RETENTION, OPEN SPACE, PUBLIC UTILITY EASEMENT AND PUBLIC TRAIL EASEMENT
TRACT L	2,636	0.06	OPEN SPACE AND PUBLIC UTILITY EASEMENT
TRACT M	7,700	0.18	OPEN SPACE, AMENITIES AND PUBLIC UTILITY EASEMENT
TRACT N	10,782	0.25	RETENTION, OPEN SPACE, AND PUBLIC UTILITY EASEMENT
TRACT O	1,700	0.04	OPEN SPACE AND PUBLIC UTILITY EASEMENT
TRACT P	11,687	0.27	RETENTION, OPEN SPACE, AMENITIES AND PUBLIC UTILITY EASEMENT
TRACT Q	1,800	0.04	OPEN SPACE, AND PUBLIC UTILITY EASEMENT
TRACT R	268,914	6.17	DRAINAGE, RETENTION, OPEN SPACE, AMENITIES AND PUBLIC UTILITY EASEMENT
TOTAL	454,838	10.44	

LINE TABLE		
LINE #	DIRECTION	LENGTH
L1	S82°50'45"W	388.63'
L2	S89°58'01"E	40.00'
L3	N00°01'59"E	45.13'
L4	N84°48'17"E	106.53'
L5	S89°39'09"E	120.00'
L6	N00°20'51"E	14.87'
L7	S89°39'09"E	55.00'
L8	N00°20'51"E	170.63'
L9	N00°20'51"E	120.00'
L10	S89°39'09"E	64.00'
L11	S00°20'51"W	120.00'
L12	N00°20'51"E	44.80'
L13	S89°39'09"E	55.00'
L14	S44°53'07"E	28.17'
L15	N89°52'55"E	116.33'

CURVE TABLE			
CURVE #	LENGTH	RADIUS	DELTA
C1	258.44'	1968.00'	007°31'27"
C2	164.25'	1800.00'	005°13'42"

OPEN SPACE TABLE		
TYPE	ACREAGE	PERCENTAGE OF TOTAL OPEN SPACE
ACTIVE	3.15	30.17%
PASSIVE	7.29	69.83%
TOTAL	10.44	100%
% OF TOTAL OPEN SPACE IN PLAT		35.83%

FS21–1007

ATWELL
866.850.4200 www.atwell-group.com
4700 E. SOUTHERN AVENUE
MESA, AZ 85206
480.218.8831

COUNTY: MARICOPA
SECTION: 5
TOWNSHIP: 4 NORTH
RANGE: 1 WEST

FINAL PLAT
WINDSTONE RANCH "PHASE 1"
CITY OF SURPRISE, ARIZONA

APRIL 2022

REVISIONS:

ATWELL

PM. J. SPRING
DR. R. GILES
JOB NO. 19000032
SCALE 0 50 100
1" = 100 FEET
19000032 WINDSTONE PH1 FP.DWG
SHEET NO. 2 OF 6

K:\19000032 – WINDSTONE\DWG\SURVEY\PHASE 1\19000032 WINDSTONE PH1 FP.DWG SAVEDATE:4/4/2022 6:20 AM PLOTDATE:4/4/2022 8:46 AM

COPYRIGHT © 2022 ATWELL LTC NO REPRODUCTION SHALL BE MADE WITHOUT THE PRIOR WRITTEN CONSENT OF ATWELL LLC

LINE TABLE		
LINE #	DIRECTION	LENGTH
L43	N89°39'09"W	19.67'
L44	S89°39'09"E	19.67'
L45	S00°20'51"W	8.00'

CURVE TABLE			
CURVE #	LENGTH	RADIUS	DELTA
C36	111.43'	422.95'	015°05'45"
C37	143.37'	284.48'	028°52'35"
C38	196.46'	347.27'	032°24'53"
C39	99.58'	170.14'	033°32'03"
C44	95.02'	162.31'	033°32'37"
C45	200.97'	355.27'	032°24'44"
C46	139.31'	276.48'	028°52'07"
C47	113.52'	430.95'	015°05'35"

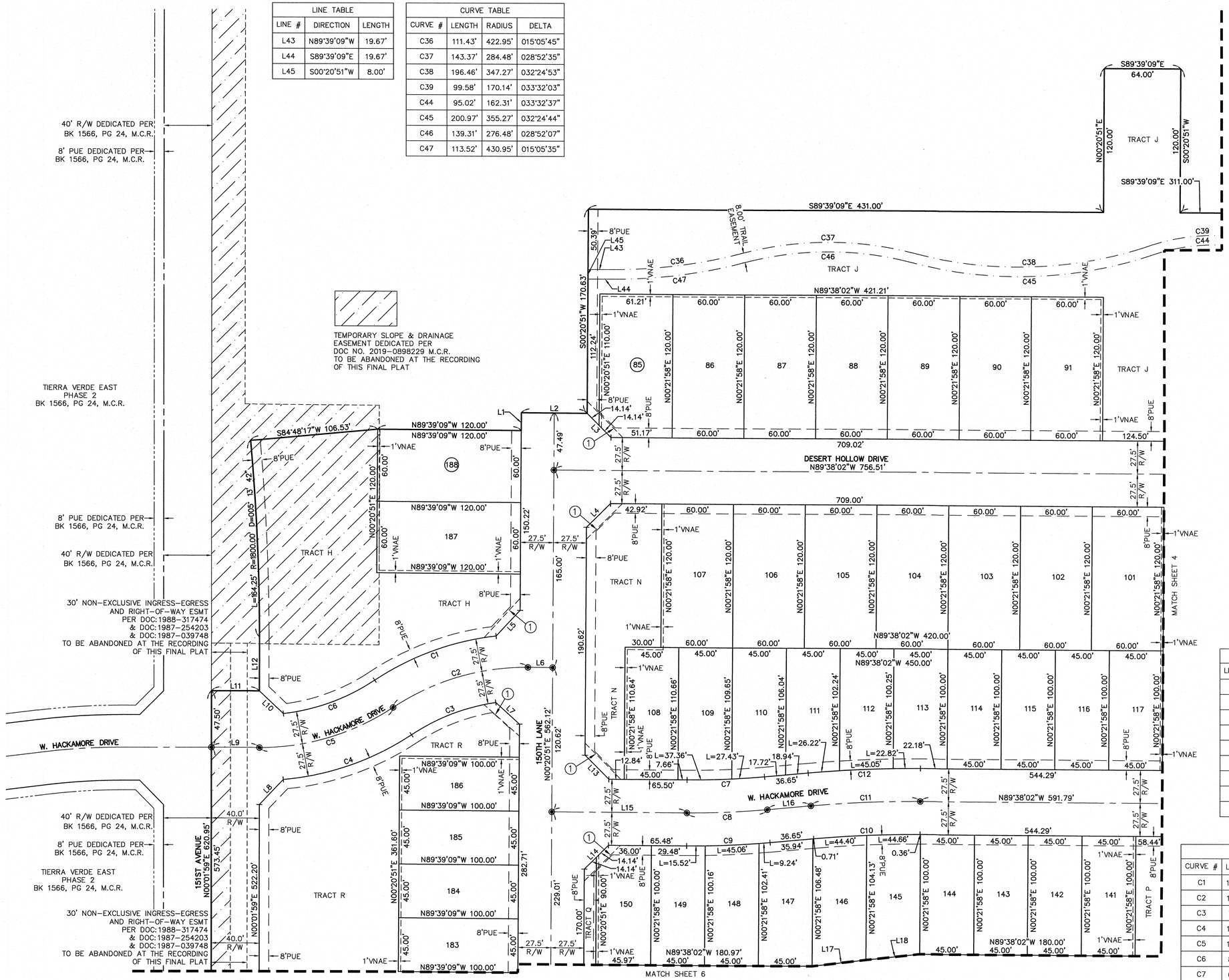

LOT TABLE\WIDTH BASED ON FBSL			
LOT	AREA SQ FT	AREA ACRES	LOT WIDTH
85	7293	0.167	61.2'
86	7200	0.165	60.0'
87	7200	0.165	60.0'
88	7200	0.165	60.0'
89	7200	0.165	60.0'
90	7200	0.165	60.0'
91	7200	0.165	60.0'
101	7200	0.165	60.0'
102	7200	0.165	60.0'
103	7200	0.165	60.0'
104	7200	0.165	60.0'
105	7200	0.165	60.0'
106	7200	0.165	60.0'
107	7200	0.165	60.0'
108	4978	0.114	45.0'
109	4966	0.114	45.0'
110	4860	0.112	45.0'
111	4682	0.107	45.0'
112	4549	0.104	45.0'
113	4502	0.103	45.0'
114	4500	0.103	45.0'
115	4500	0.103	45.0'
116	4500	0.103	45.0'
117	4500	0.103	45.0'
141	4500	0.103	45.0'
142	4500	0.103	45.0'
143	4500	0.103	45.0'
144	4500	0.103	45.0'
145	4601	0.106	45.0'
146	4747	0.109	45.0'
147	4699	0.108	45.0'
148	4548	0.104	45.0'
149	4501	0.103	45.0'
150	4548	0.104	46.0'
183	4500	0.103	45.0'
184	4500	0.103	45.0'
185	4500	0.103	45.0'
186	4500	0.103	45.0'
187	7200	0.165	60.0'
188	7200	0.165	60.0'

LINE TABLE			LINE TABLE		
LINE #	DIRECTION	LENGTH	LINE #	DIRECTION	LENGTH
L1	S00°20'51"W	14.87'	L10	N46°43'19"W	27.50'
L2	N89°39'09"W	55.00'	L11	N89°58'01"W	40.00'
L3	N44°38'35"W	28.29'	L12	S00°01'59"W	45.13'
L4	N45°21'25"E	28.28'	L13	N44°38'35"W	28.29'
L5	N43°13'40"E	29.31'	L14	S45°21'25"W	28.28'
L6	N89°39'09"W	20.67'	L15	S89°38'02"E	112.99'
L7	N47°26'55"W	26.87'	L16	S85°07'09"W	36.65'
L8	S43°46'53"W	28.90'	L17	N83°26'07"E	45.33'
L9	N89°58'01"W	40.07'	L18	N83°50'08"E	45.29'

CURVE TABLE			
CURVE #	LENGTH	RADIUS	DELTA
C1	109.07'	227.50'	027°28'09"
C2	119.48'	200.00'	034°13'41"
C3	76.21'	172.50'	025°18'45"
C4	114.72'	227.50'	028°53'29"
C5	118.38'	200.00'	033°54'49"
C6	82.09'	172.50'	027°16'01"
C7	64.79'	707.50'	005°14'49"
C8	67.31'	735.00'	005°14'49"
C9	69.83'	762.50'	005°14'49"
C10	89.06'	972.50'	005°14'49"
C11	91.58'	1000.00'	005°14'49"
C12	94.09'	1027.50'	005°14'49"

ATWELL
866.850.4200 www.atwell-group.com
4700 E. SOUTHERN AVENUE
MESA, AZ 85206
480.218.8831

FINAL PLAT
WINDSTONE RANCH "PHASE 1"
CITY OF SURPRISE, ARIZONA

COUNTY: MARICOPA
SECTION: 5
TOWNSHIP: 4 NORTH
RANGE: 1 WEST

APRIL 2022

REVISIONS:

ATWELL

PM. J. SPRING
DR. R. GILES
JOB NO. 19000032
SCALE 0 20 40
1" = 40 FEET

19000032 WINDSTONE PH1 FP.DWG

SHEET NO. 3 OF 6

FS21-1007

PROFESSIONAL LAND SURVEYOR CERTIFICATE NO. 22282 JAMES G. SPRING Date Signed 4-14-22 ARIZONA U.S.A.

K:\19000032 - WINDSTONE\DWG\SURVEY\PHASE 1\19000032 WINDSTONE PH1 FP.DWG SAVEDATE: 4/4/2022 8:20 AM PLOTDATE: 4/4/2022 8:47 AM

COPYRIGHT © 2022 ATWELL LLC NO REPRODUCTION SHALL BE MADE WITHOUT THE PRIOR WRITTEN CONSENT OF ATWELL LLC

LINE TABLE		
LINE #	DIRECTION	LENGTH
L46	N89°39'09"W	4.02'
L47	N00°20'51"E	8.00'
L48	S89°39'09"E	4.02'

CURVE TABLE			
CURVE #	LENGTH	RADIUS	DELTA
C40	173.11'	396.00'	025°02'49"
C41	67.34'	404.00'	009°33'01"
C42	66.01'	396.00'	009°33'01"
C43	176.49'	404.00'	025°01'49"

LOT TABLE\WIDTH BASED ON FBSL				LOT TABLE\WIDTH BASED ON FBSL			
LOT	AREA SQ FT	AREA ACRES	LOT WIDTH	LOT	AREA SQ FT	AREA ACRES	LOT WIDTH
92	7566	0.174	60.0'	124	4661	0.107	47.1'
93	7566	0.174	60.0'	125	4507	0.103	45.0'
94	7566	0.174	60.0'	126	4522	0.104	45.0'
95	7493	0.172	60.5'	127	4536	0.104	45.0'
96	7628	0.175	61.0'	128	4551	0.104	45.0'
97	7223	0.166	60.0'	129	4565	0.105	45.0'
98	7200	0.165	60.0'	130	4579	0.105	45.0'
99	7800	0.179	65.0'	134	4500	0.103	45.5'
100	7800	0.179	65.0'	135	4500	0.103	45.0'
118	4500	0.103	45.0'	136	4500	0.103	45.0'
119	4500	0.103	45.0'	137	4500	0.103	45.0'
120	4500	0.103	45.0'	138	4500	0.103	45.0'
121	4500	0.103	45.0'	139	4500	0.103	45.0'
122	4500	0.103	45.0'	140	4500	0.103	45.0'
123	4500	0.103	45.0'				

LINE TABLE			LINE TABLE		
LINE #	DIRECTION	LENGTH	LINE #	DIRECTION	LENGTH
L19	S00°20'51"W	44.80'	L27	N78°02'21"E	44.32'
L20	N89°39'09"W	55.00'	L28	N56°04'57"W	27.86'
L21	N44°53'07"W	28.17'	L29	N00°21'58"E	121.39'
L22	S89°52'55"W	116.33'	L30	N00°21'58"E	90.00'
L23	S45°31'37"W	28.61'	L31	N45°21'58"E	28.28'
L24	N00°20'51"E	90.45'	L32	S44°38'02"E	28.28'
L25	N11°57'39"W	96.72'	L33	N00°21'58"E	90.00'
L26	N33°03'31"E	28.27'			

CURVE TABLE			
CURVE #	LENGTH	RADIUS	DELTA
C13	91.84'	427.50'	012°18'30"
C14	85.93'	400.00'	012°18'30"
C15	75.47'	372.50'	011°36'30"
C16	76.96'	372.50'	011°50'14"
C17	86.06'	400.00'	012°19'37"
C18	88.79'	427.50'	011°54'00"
C19	58.94'	372.50'	009°03'57"
C20	86.06'	400.00'	012°19'37"
C21	91.98'	427.50'	012°19'37"

ATWELL
866.850.4200 www.atwell-group.com
4700 E. SOUTHERN AVENUE
MESA, AZ 85206
480.218.8831

FINAL PLAT
WINDSTONE RANCH "PHASE 1"
CITY OF SURPRISE, ARIZONA

COUNTY: MARICOPA
SECTION: 5
TOWNSHIP: 4 NORTH
RANGE: 1 WEST

APRIL 2022

REVISIONS:

ATWELL
PM. J. SPRING
DR. R. GILES
JOB NO. 19000032

SCALE 0 20 40
1" = 40 FEET

19000032 WINDSTONE PH1 FP.DWG

SHEET NO. 4 OF 6

FS21-1007

PROFESSIONAL LAND SURVEYOR CERTIFICATE NO. 22282 JAMES G. SPRING Date Signed 4-4-22 ARIZONA U.S.A.

K:\19000032 - WINDSTONE\DWG\SURVEY\PHASE 1\19000032 WINDSTONE PH1 FP.DWG SAVEDATE:4/4/2022 6:20 AM PLOTDATE:4/4/2022 8:47 AM

COPYRIGHT © 2022 ATWELL LLC NO REPRODUCTION SHALL BE MADE WITHOUT THE PRIOR WRITTEN CONSENT OF ATWELL LLC

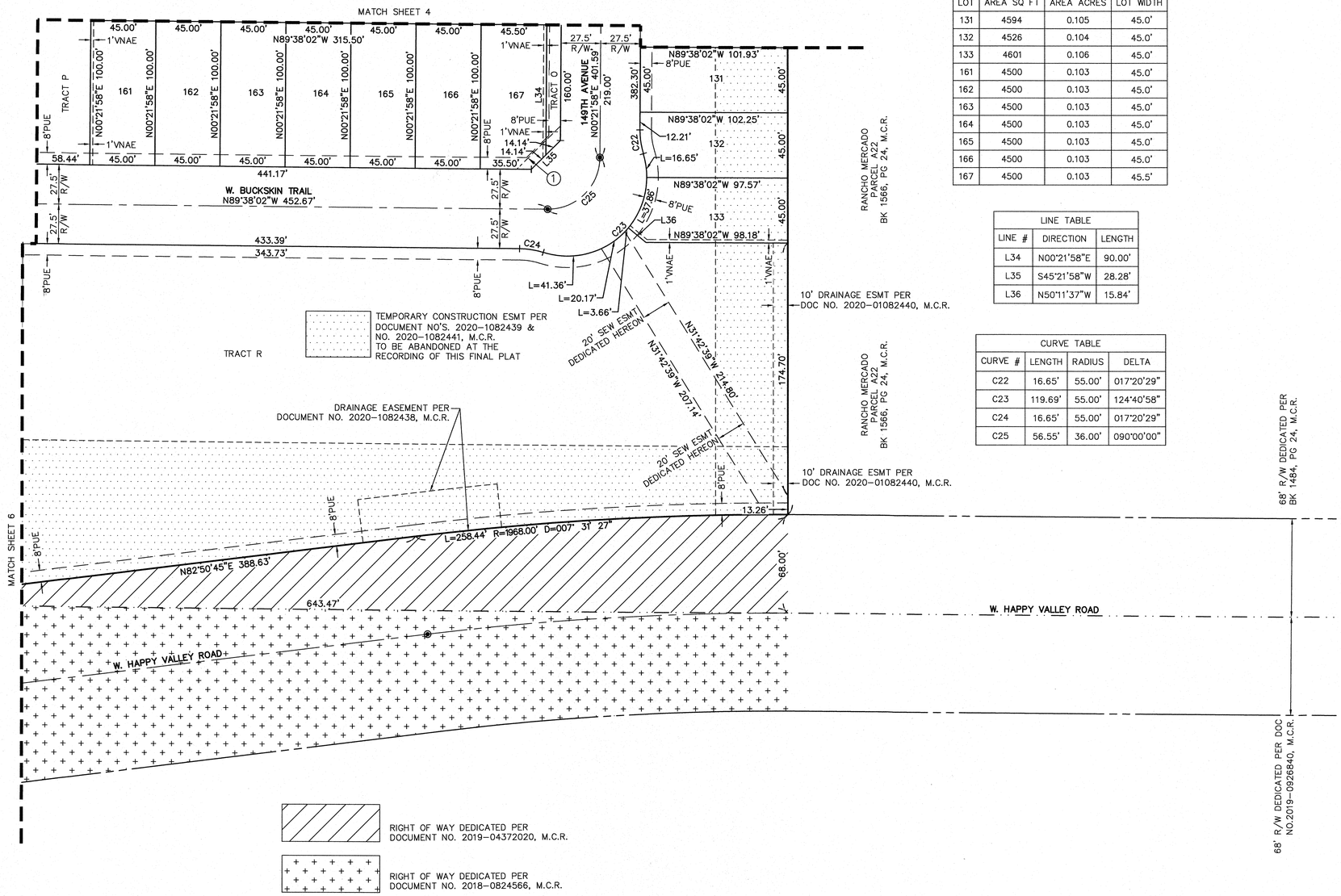

LOT TABLE\WIDTH BASED ON FBSL			
LOT	AREA SQ FT	AREA ACRES	LOT WIDTH
131	4594	0.105	45.0'
132	4526	0.104	45.0'
133	4601	0.106	45.0'
161	4500	0.103	45.0'
162	4500	0.103	45.0'
163	4500	0.103	45.0'
164	4500	0.103	45.0'
165	4500	0.103	45.0'
166	4500	0.103	45.0'
167	4500	0.103	45.5'

LINE TABLE		
LINE #	DIRECTION	LENGTH
L34	N00°21'58"E	90.00'
L35	S45°21'58"W	28.28'
L36	N50°11'37"W	15.84'

CURVE TABLE			
CURVE #	LENGTH	RADIUS	DELTA
C22	16.65'	55.00'	017°20'29"
C23	119.69'	55.00'	124°40'58"
C24	16.65'	55.00'	017°20'29"
C25	56.55'	36.00'	090°00'00"

ATWELL
866.850.4200 www.atwell-group.com
4700 E. SOUTHERN AVENUE
MESA, AZ 85206
480.218.8831

COUNTY: MARICOPA
SECTION: 5
TOWNSHIP: 4 NORTH
RANGE:1 WEST

FINAL PLAT
WINDSTONE RANCH "PHASE 1"
CITY OF SURPRISE, ARIZONA

APRIL 2022

REVISIONS:

ATWELL

PM. J. SPRING
DR. R. GILES
JOB NO. 19000032
SCALE 0 20 40
1" = 40 FEET
19000032 WINDSTONE PH1 FP.DWG
SHEET NO. 5 OF 6

PROFESSIONAL LAND SURVEYOR CERTIFICATE NO. 22282 JAMES G. SPRING Date Signed 4-4-22 ARIZONA U.S.A.

FS21-1007

K:\19000032 - WINDSTONE\DWG\SURVEY\PHASE 1\19000032 WINDSTONE PH1 FP.DWG SAVEDATE:4/4/2022 6:20 AM PLOTDATE:4/4/2022 8:47 AM

COPYRIGHT © 2022 ATWELL LLC NO REPRODUCTION SHALL BE MADE WITHOUT THE PRIOR WRITTEN CONSENT OF ATWELL LLC

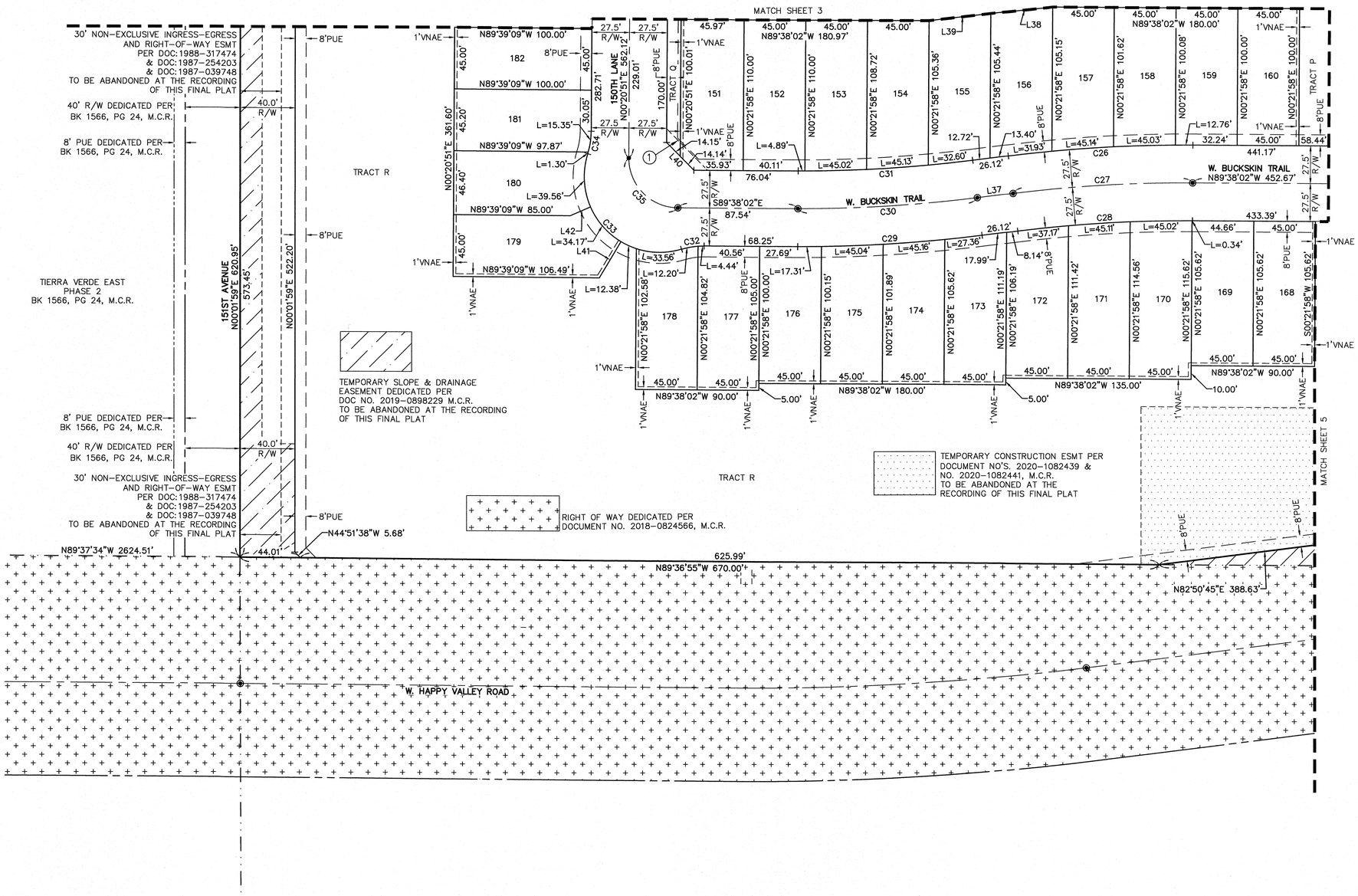

LOT TABLE\WIDTH BASED ON FBSL			
LOT	AREA SQ FT	AREA ACRES	LOT WIDTH
151	5004	0.115	45.9'
152	4950	0.114	45.0'
153	4929	0.113	45.0'
154	4825	0.111	45.0'
155	4749	0.109	45.0'
156	4732	0.109	45.0'
157	4645	0.107	45.0'
158	4531	0.104	45.0'
159	4500	0.103	45.0'
160	4500	0.103	45.0'
168	4753	0.109	45.0'
169	4753	0.109	45.0'
170	5187	0.119	45.0'
171	5092	0.117	45.0'
172	4903	0.113	45.0'
173	4873	0.112	45.0'
174	4662	0.107	45.0'
175	4538	0.104	45.0'
176	4501	0.103	45.0'
177	4725	0.108	45.0'
178	4574	0.105	45.0'
179	5140	0.118	45.0'
180	4442	0.102	46.4'
181	4509	0.104	45.2'
182	4500	0.103	45.0'

LINE TABLE		
LINE #	DIRECTION	LENGTH
L37	N82°50'45"E	26.12'
L38	N83°50'08"E	45.29'
L39	N83°26'07"E	45.33'
L40	N44°38'35"W	28.29'
L41	N30°53'00"E	30.64'
L42	N66°28'32"E	16.08'

CURVE TABLE			
CURVE #	LENGTH	RADIUS	DELTA
C26	134.86'	1027.50'	007°31'13"
C27	131.25'	1000.00'	007°31'13"
C28	127.64'	972.50'	007°31'13"
C29	134.86'	1027.50'	007°31'13"
C30	131.25'	1000.00'	007°31'13"
C31	127.64'	972.50'	007°31'13"
C32	16.65'	55.00'	017°20'29"
C33	119.67'	55.00'	124°39'51"
C34	16.65'	55.00'	017°20'29"
C35	56.54'	36.00'	089°58'52"

ATWELL
866.850.4200 www.atwell-group.com
4700 E. SOUTHERN AVENUE
MESA, AZ 85206
480.218.8831

COUNTY: MARICOPA
SECTION: 5
TOWNSHIP: 4 NORTH
RANGE:1 WEST

FINAL PLAT
WINDSTONE RANCH "PHASE 1"
CITY OF SURPRISE, ARIZONA

APRIL 2022

REVISIONS:

ATWELL
PM. J. SPRING
DR. R. GILES

JOB NO. 19000032

SCALE 0 20 40
1" = 40 FEET

19000032 WINDSTONE PH1 FP.DWG

SHEET NO. 6 OF 6

FS21-1007

PROFESSIONAL LAND SURVEYOR CERTIFICATE NO. 22282 JAMES G. SPRING Date Signed 4-4-22 ARIZONA U.S.A.

K:\19000032 - WINDSTONE\DWG\SURVEY\PHASE 1\19000032 WINDSTONE PH1 FP.DWG SAVEDATE:4/4/2022 6:20 AM PLOTDATE:4/4/2022 8:48 AM

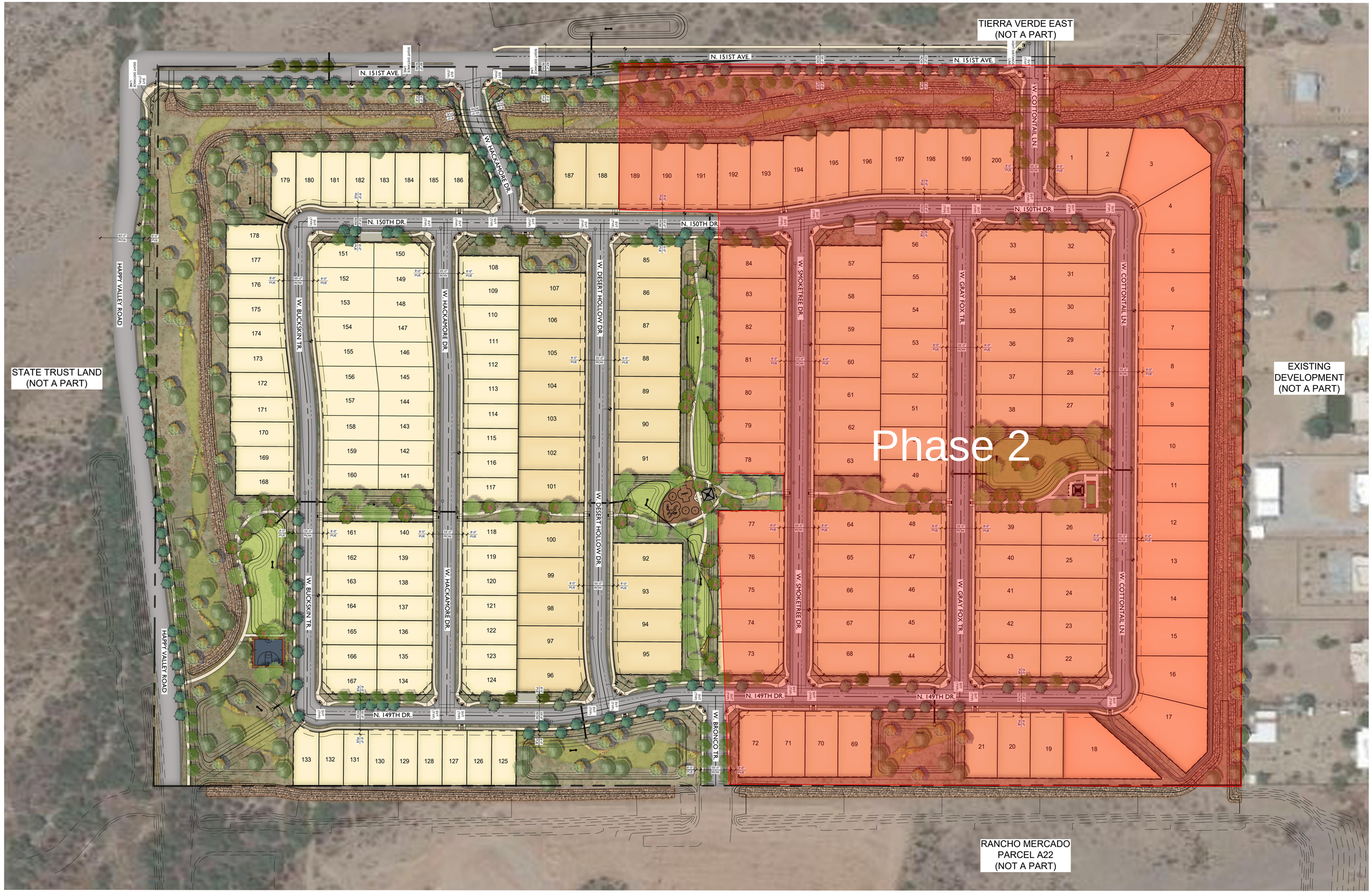

Copyright RVi

Aerial Photography Date:

RVi
120 S. Ash Avenue
Tempe, Arizona 85281
Tel: 480.994.0994
www.rviplanning.com

WINDSTONE RANCH • **MASTERPLAN**

- SURPRISE, ARIZONA
- 04/28/2021
- # 20002176
- KAX GROUP

0 40' 80' 160'
SCALE: 1" = 80'-0"

For Illustrative purposes only. Subject to change without notice.

PRELIMINARY PLAT FS20 -596

L:\20002176-Windstone Ranch\6-20002176-LANDSCAPE\2-DD\3-SHEETS\21776-DD-MASTER PLAN.dwg

Christina Sexton

From: JAMES, MARK C GS-12 USAF AETC 56 FW/CVE <mark.james.14@us.af.mil>
Sent: Wednesday, January 5, 2022 8:33 AM
To: Nichole Flores
Cc: 56 FW/CIT Community Initiative
Subject: RE: FS21-1007 Windstone Ranch Phase 1 - New Digital Submittal 12.16.21
Attachments: smime.p7s; ATT00001.txt; ATT00002.htm

Nichole,

Thank you for allowing Luke AFB to make comments on the Windstone Ranch Phase 1 Application. The 59-acre site is located in the City of Surprise within the southeast quarter of Section 5, Township 4 north, Range 1 west of the Gila and Salt River Base and Meridian, Maricopa County, Arizona. It is approximately 5.1 miles outside the Aux-1 2004 JLUS 65 Ldn, "high noise or accident potential zone" as defined by A.R.S. § 28-8461 and is inside the "territory in the vicinity of a military airport" also defined by A.R.S. § 28-8461.

As described in the application, this request will not have a negative impact on Luke AFB Flight Operations. Since the site will be located inside the "territory in the vicinity of a military airport," it will be subjected to approximately 165 over flights per day, as low as 1,500 feet above the ground. We recommend you review the sound attenuation requirements found in A.R.S. § 28-8482. In addition, a strong notification program on the part of the applicant is essential to inform the tenant about Luke AFB operations.

Respectfully,

Mark James
Planning Manager, Community Initiatives Team
Luke AFB AZ 85309
Office: 623-856-9981
DSN: 896-9981

From: Nichole Flores <Nichole.Flores@surpriseaz.gov>
Sent: Thursday, December 16, 2021 12:52 PM
To: 56 FW/CIT Community Initiative <56FW.CIT.CommunityInitiative@us.af.mil>; Afshin Ahouraiyan (Flood Control District of Maricopa County) <Afshin.Ahouraiyan@Maricopa.Gov>; Alex Garza (Maricopa Assoc of Governments) <AGarza@azmag.gov>; Chris Cain (Maricopa Water District) <chrisc@mwdaz.com>; Debbie Trasancos (Maricopa Water District) <debbiet@mwdaz.com>; Ernest (USPS) <Ernest.L.James@usps.gov>; Eva Pierce <eva.pierce@dysart.org>; Greg Welch <greg.welch@surpriseaz.gov>; Ibeth - USPS <Ibeth.L.Roman@usps.gov>; Jerome Choy (ADOT) <jchoy@azdot.gov>; Kevin Shipman <kevin.shipman@dysart.org>; Leslie - MWD <lesliej@mwdaz.com>; Lynndsay ONeil <lynndsay.oneill@maricopa.gov>; Mark Frago <fragom@mail.maricopa.gov>; Mary Orta - Surprise Chamber <mary.orta@surpriseregionalchamber.com>; Raoul Sada - Surprise Chamber <raoul@surpriseregionalchamber.com>; Victor.Schaum <Victor.Schaum@cox.com>; Yvonne Aguirre <yvonne.aguirre@swgas.com>
Subject: [Non-DoD Source] FS21-1007 Windstone Ranch Phase 1 - New Digital Submittal 12.16.21

Good afternoon,

Attached please find the **application**, **narrative**, and **final plat** for the above referenced project.

Please feel free to contact us with any questions.

Best regards,

Nichole Flores
Planning Project Coordinator
City of Surprise | Community Development
16000 N Civic Center Plz | Surprise AZ 85374
(623) 222-3244 Direct

This e-mail and any accompanying files transmitted are intended solely for the use of the individual or entity to whom they are addressed; if you have received this e-mail in error please delete it and notify the sender. In addition, under Arizona law, e-mail communications and e-mail addresses may be public records.
0.1

SURPRISE
ARIZONA

FS21-1007
Windstone Ranch Phase 1 - Final Plat

City Council – January 17, 2023

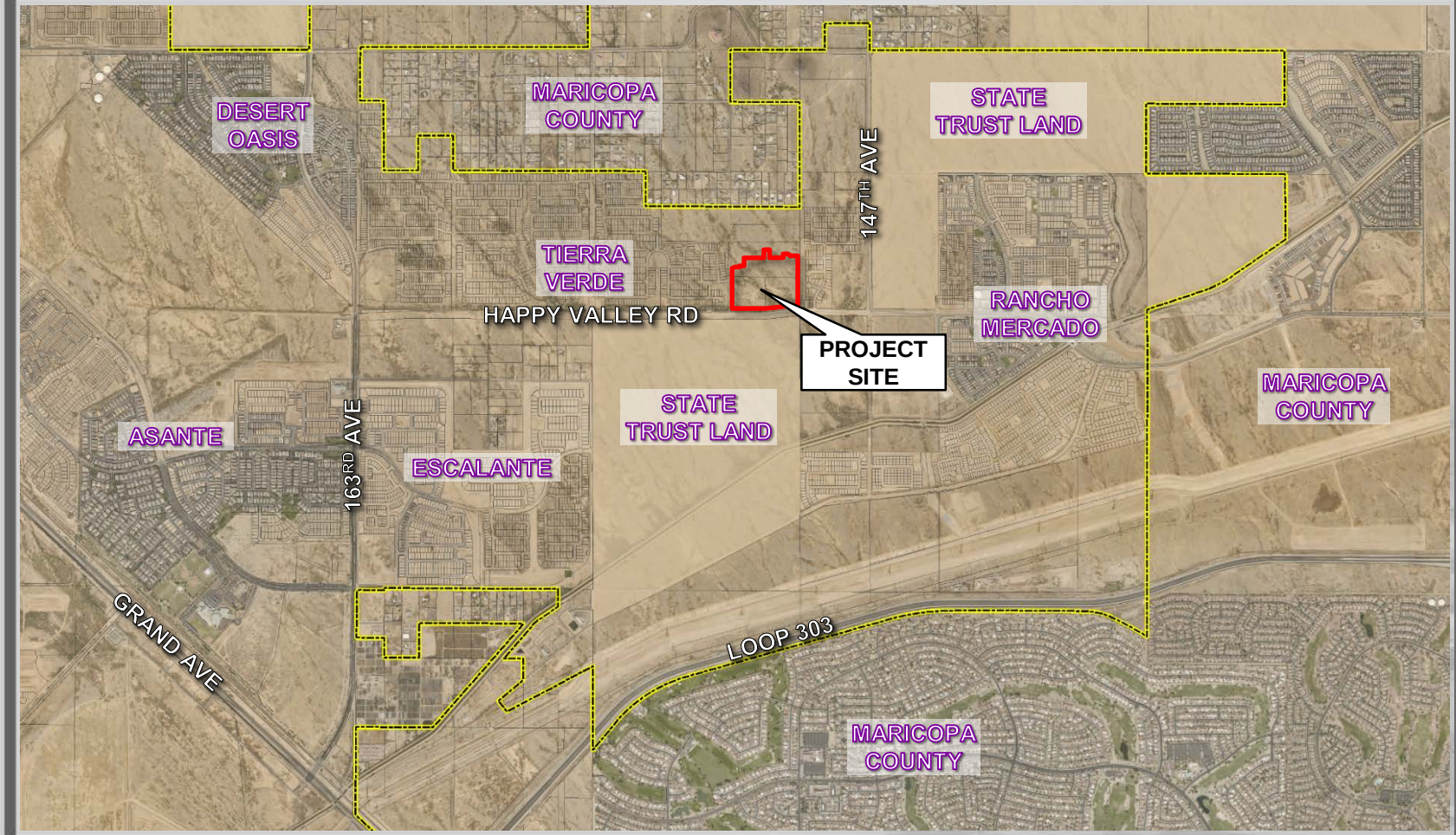

FS21-1007 VICINITY MAP

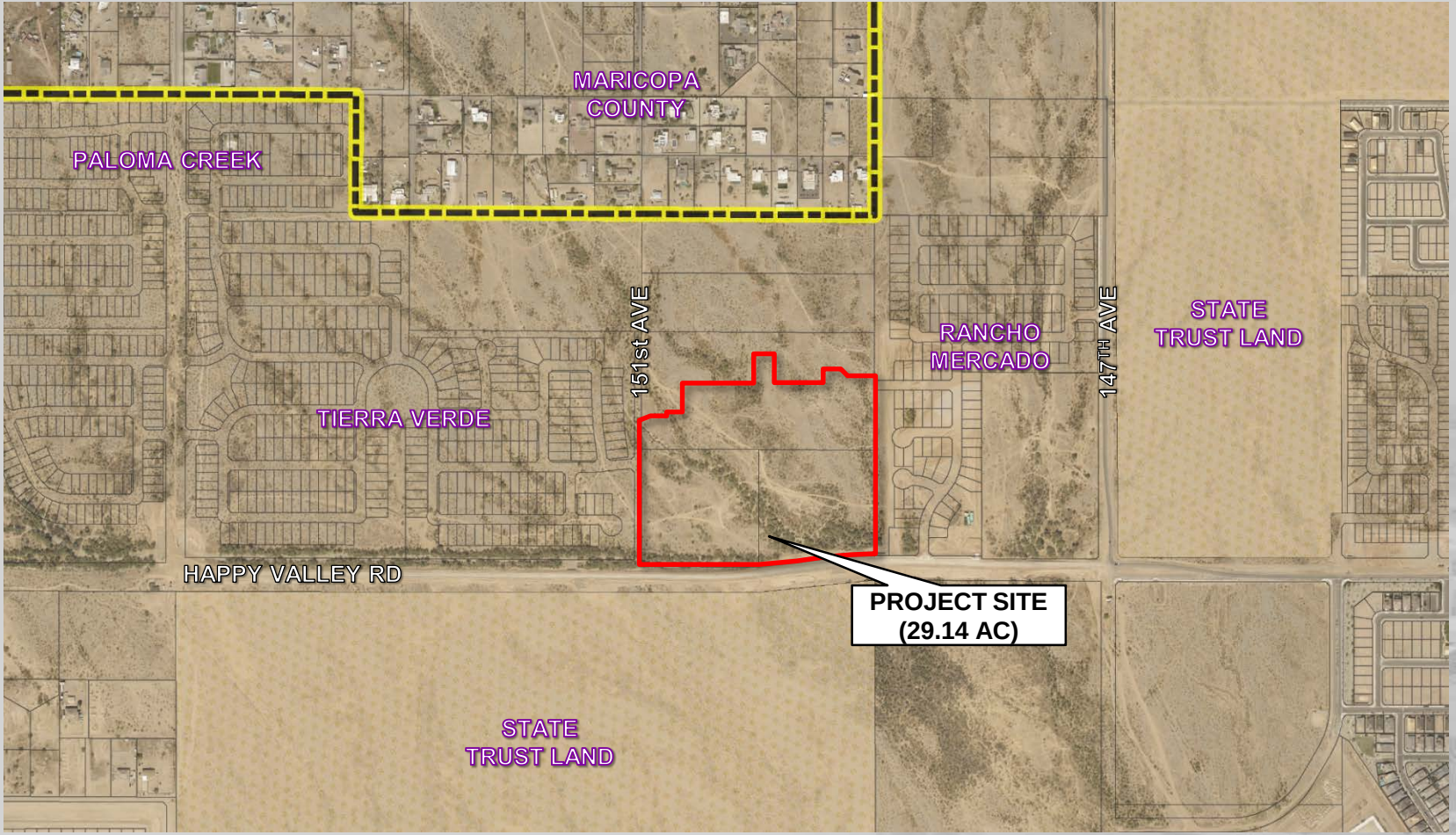

FS21-1007 VICINITY MAP

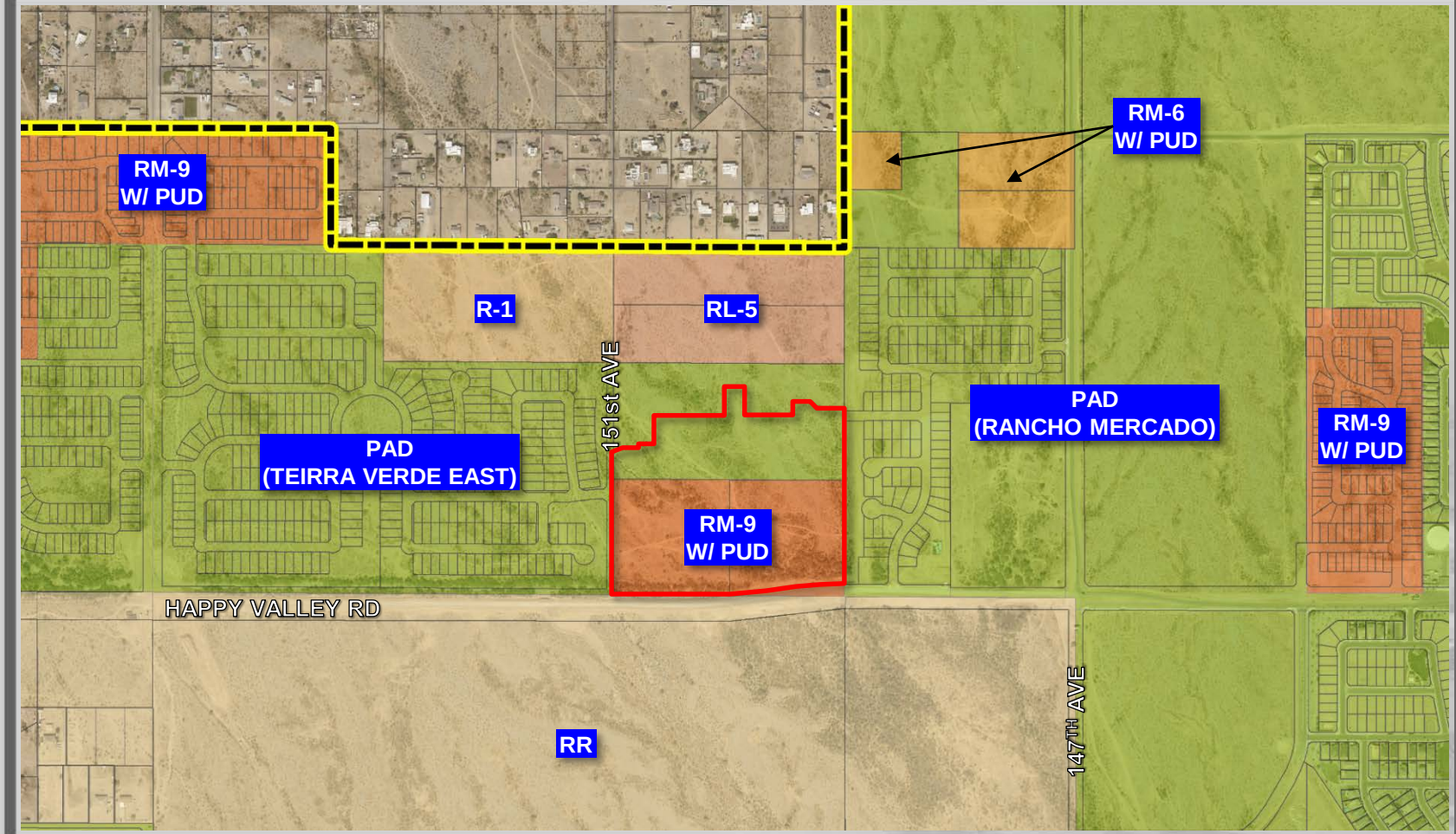

FS21-1007 ZONING MAP

FS21-1007 FINAL PLAT

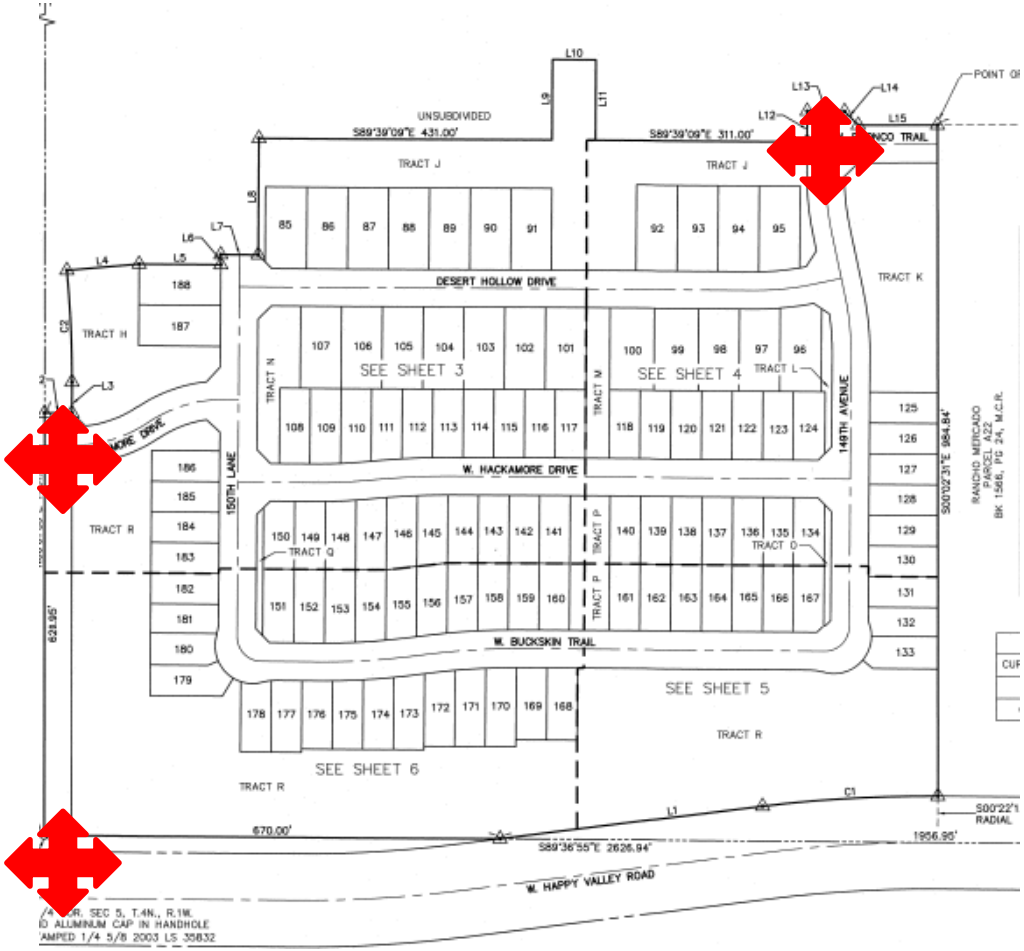

Site: 29.14 acres
Lots: 104
typical size 45’ x 110’
45’ x 120’
Density: 3.56 DU/Ac
Open Space: 10.4 ac
(34.4%)

FS21-1007 OPEN SPACE

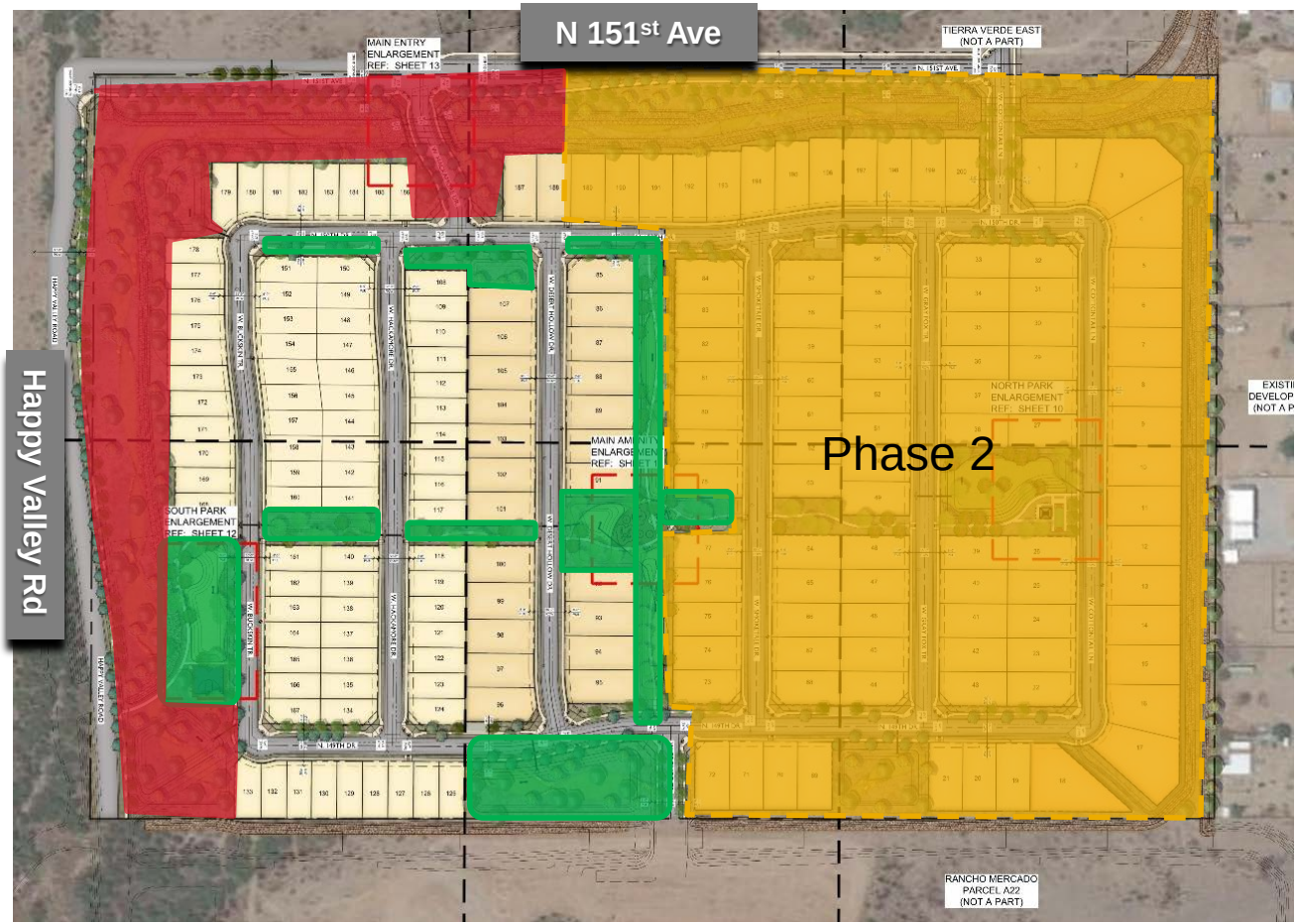

Total Open Space -10.4 ac (34.4%)

Active Rec Space – 7.3 ac

Passive Rec Space – 3.1 ac

FS21-1007 AMENITY SITE

Turf & Retention

Playground

- Tot Lot and Swings

Seat walls

Ramada with:

- Grills
- Table

FS21-1007 AMENITY SITE

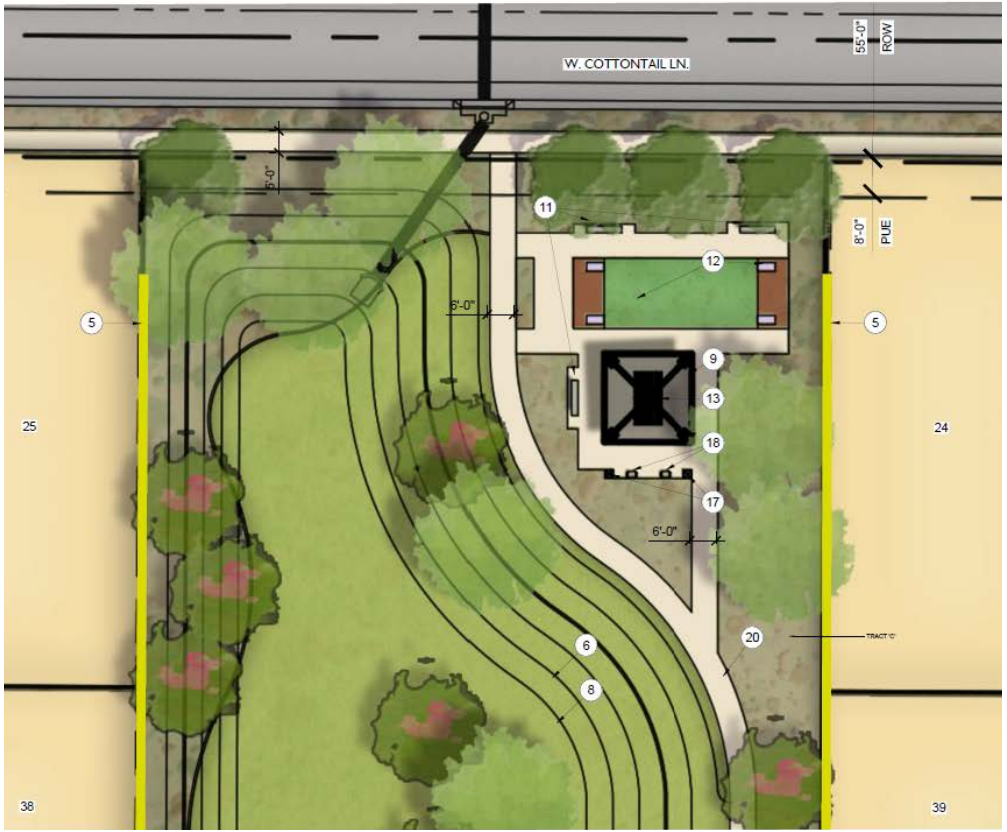

Turf & Retention

Sport Courts

- Cornhole

Seat walls

Ramada with:

- Grills
- Table

FS21-1007 WALL PLAN

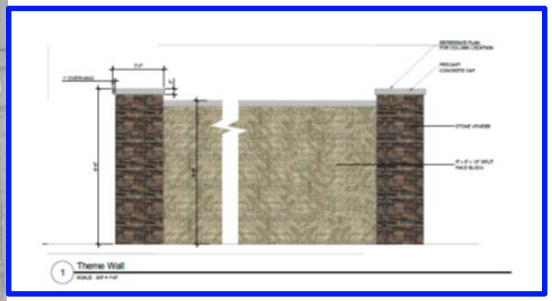

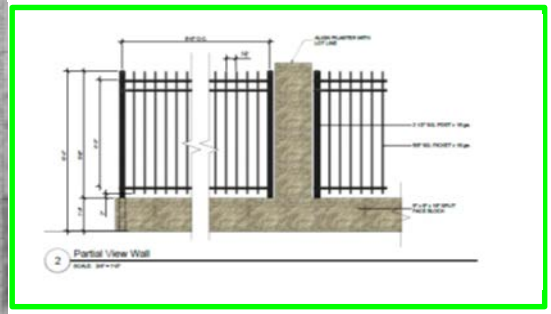

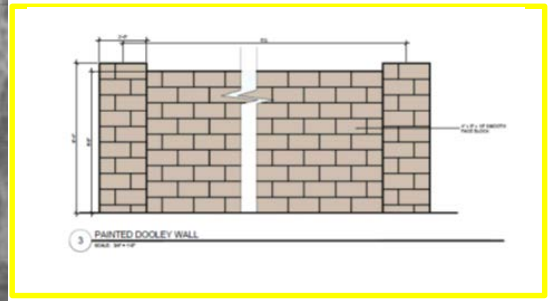

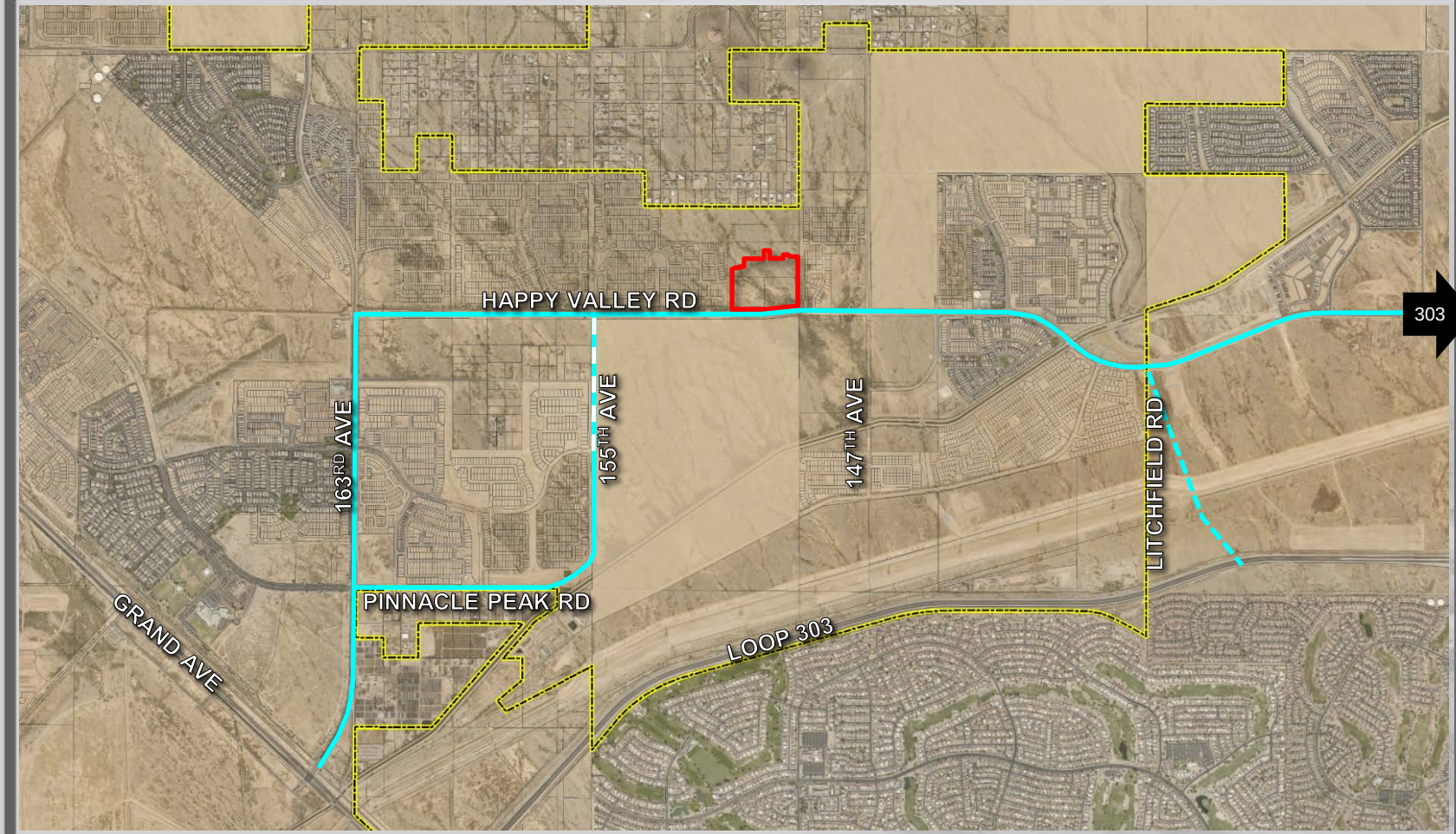

FS21-1007 TRAFFIC MAP

SURPRISE
ARIZONA

QUESTIONS / COMMENTS?

Thank You

CITY OF SURPRISE
Regular City Council Meeting

Council Meeting Date: January 17, 2023 Contact Person: Lloyd Abrams
Submitting Department: Community Development District: Citywide
Staff Recommendations:

Consent: Yes Regular: No Public Hearing: No Report/Discussion: No

Agenda Wording:
Consideration and action appointing members to the Surprise Redistricting Advisory Committee with terms of service until such time as the Committee's redistricting recommendations have been presented to the City Council in accordance with Resolution #2023-05.

Motion:
I move to approve the Membership Appointment Roster for the Surprise Redistricting Advisory Committee with terms of service until such time as the Committee's redistricting recommendations have been presented to the City Council.

Background:
On January 3, 2023, City council approved Resolution 2023-05 creating a Surprise Redistricting Advisory Committee. In accordance with Resolution 2023-05, the Mayor will appoint three (3) representatives at large and each current Councilmember shall appoint one (1) representative from their District to serve on the Committee. Each representative appointed shall not currently be a member of a City of Surprise commission, board, or committee. The purpose of this Advisory Committee is to review all redistricting proposals, solicit input and comments from the public regarding redistricting, and formulate a recommendation(s) for redistricting to be presented to the City Council. Members of the Advisory Committee shall serve until such time as their redistricting recommendation(s) has been presented to the City Council.

Objective Analysis:
All proceedings of the Surprise Redistricting Advisory Committee shall be conducted in conformity with the requirements of the Surprise Municipal Code Section 2-295, and the laws of the State of Arizona, specifically including, but not limited to the requirements of A.R.S. § 38-431 et seq., the Arizona Open Meetings Law.

Policy Compliant:
This item is policy complaint.

Financial Impact:
This item does not have a direct financial impact.

Budget Impact:
There is no anticipated budget impact related to this item.
FTE Impact:
This item does not have an impact on current staff levels.

ATTACHMENTS:
1. Redistricting Advisory Committee Membership Appointment Roster

Community Development
16000 N. Civic Center Plaza
Surprise, AZ 85374

Redistricting Advisory Committee Membership Appointment Roster

Mayor Hall's representatives at large
Ken Johanson
Michelle Watson
Andy Cepon
District 1, Councilmember Haney's representative Steve Wright
District 2, Vice Mayor Cline's representative Terry Murphy
District 3, Councilmember Duffy's representative Nate Pomeroy
District 4, Councilmember Remley's representative Karan Bellemare
District 5, Councilmember Hastings's representative Ron Boen
District 6, Councilmember Judd's representative Chris Eastburn

CITY OF SURPRISE
Regular City Council Meeting

Council Meeting Date: January 17, 2023

Contact Person: Jodi Tas, MNGMNT ANALYST - SR

Submitting Department: City Manager Office

District: Citywide

Staff Recommendations:

Consent: No Regular: Yes Public Hearing: No Report/Discussion: No

Agenda Wording:

Consideration and action pertaining to the 2023 Legislative Agenda.

Motion:

I move to approve the 2023 Legislative Agenda as presented.

Background:

The Legislative Agenda defines the city's legislative priorities and core values each legislative session and provides direction to Government Relations staff to ensure the city is actively engaging on issues at the US and State Capitols that reflect the priorities and mission of the Surprise City Council.

Objective Analysis:

To ensure that the Surprise City Council's priorities remain heard and to advocate for the best interests of the city and residents. Items includes maintaining Surprise's quality of life; preserve local funding and local control; oppose pre-emption; advocate for transportation funding and projects for Surprise and our region; protect local authority as it pertains to land-use planning; support, preserve and enhance public safety ability to do their jobs effectively; support efforts to enhance our economic competitiveness; protect Surprise's investment in safe, reliable and sustainable water; protect the mission of Luke AFB.

Policy Compliant:

Yes

Financial Impact:

N/A

Budget Impact:

N/A

FTE Impact:

N/A

ATTACHMENTS:

1. 2023 Legislation Agenda Final

SURPRISE
ARIZONA

2023 Legislative Agenda

First Regular Session of the 56th Arizona Legislature

PURPOSE

- To define the City's legislative priorities and core values for the 2023 state legislative session.
- To provide direction to Government Relations to ensure the City is actively engaging on issues at the U.S. and State Capitols that reflect the priorities and mission of the Surprise City Council.

2023 LEGISLATIVE AGENDA

- Maintain Surprise's Quality of Life
  - Protect attributes that make Surprise a desirable community for families and business alike.
  - Examples include efficient transportation, public safety, safe neighborhoods, open space, and economic prosperity.
  - Support responsible and manageable growth.

2023 LEGISLATIVE AGENDA

- Preserve Local Funding
  - Protect existing funding sources that bring revenue to the City of Surprise which support the quality of life for our residents.
  - Common examples include our portion of state shared income tax, state transaction tax, vehicle license tax and Highway User Revenue Fund (HURF) monies.

2023 LEGISLATIVE AGENDA

- Oppose Pre-emption of Local Authority
  - Support local decision-making authority.
  - The community trusts their local elected officials to protect public health, safety and their quality of life. Any efforts to weaken or eliminate local control and decision-making authority through pre-emption or mandates will be opposed.

2023 LEGISLATIVE AGENDA

- Transportation
  - Support regionally coordinated transportation planning.
  - Continue to engage regional partners to ensure our residents have reliable and efficient transportation options and out of our city.
  - Oppose efforts that limit local control in the transportation decision-making process.

2023 LEGISLATIVE AGENDA

- Transportation, cont'd
  - Support federal and state funding for statewide, regional and local transportation and infrastructure projects.
  - Work collaboratively with our federal, state, regional and other local delegations to secure grant funding for our most impactful infrastructure needs.

2023 LEGISLATIVE AGENDA

- Land Use Planning
  - Protect local authority in land use planning.
  - Support efforts that promote orderly and sustainable growth.
  - Oppose efforts that impede growth management.

2023 LEGISLATIVE AGENDA

- Public Safety
  - Preserve and enhance the ability of local governments to strategically plan for and respond to emergencies.
  - Support legislation that enhances public safety services while maintaining vigilance with the protection of individual rights.

2023 LEGISLATIVE AGENDA

- Economic Development
  - Support efforts that enhance our economic competitiveness.
  - Support diversification of economic development tools.
  - Protect local authority on development projects.
  - Support new and existing tools for private sector growth and revitalization.
  - Support legislative change that allows growth to pay for itself in order to attract new development opportunities.

2023 LEGISLATIVE AGENDA

- Water and Sustainability
  - Collaborate with regional and local partners to support legislation that encourages practical water efficiency and conservation measures.
  - Protect surface water and uphold the principles of the Groundwater Management Act.
  - Protect Surprise's investment in safe and reliable water resources and wastewater services.
  - Ensure that Surprise is able to supply assured, safe and sustainable water to our residents.

2023 LEGISLATIVE AGENDA

- Protect Mission of Luke Air Force Base
  - Advocate for the long-term mission and viability of Luke AFB through local and regional community support as well as any level of advocacy to protect base.
- Neighborhoods
  - Support our policies that strengthen the quality of life in our neighborhoods

SURPRISE
ARIZONA

QUESTIONS OR COMMENTS?

Thank You

CITY OF SURPRISE
Regular City Council Meeting

Council Meeting Date: January 17, 2023

Contact Person: Danielle Osborne, HSCV Administrator

Submitting Department: Human Svcs and Comm Vitality

District: Citywide

Staff Recommendations:

Consent: No Regular: Yes Public Hearing: No Report/Discussion: No

Agenda Wording:

Consideration and action pertaining to approval of an amendment to the Fiscal Year 2023 budget by moving budget authority of $450,000.00 within the Municipal Art Fund from contingency to Project R51020 for the Stadium Art Project; Resolution #2023-03

Motion:

I move to approve Resolution #2023-03.

Background:

In 2016, the Surprise City Council adopted the One and One-Third Percent for Public Art Program via Ordinance 2016-13 which allows 1.3% of the funding for qualified Capital Improvement Projects to be dedicated towards an artistic piece.

On November 16, 2022, the City closed a Request for Proposals (RFP) seeking submissions for artwork to be installed outside of the 1st and 3rd base entrance gates at Surprise Stadium. A panel was convened to evaluate the submissions and to recommend a proposal to the full Arts & Cultural Advisory Commission. This item has been placed on the agenda to seek final acceptance from the City Council.

Objective Analysis:

The mission of the Surprise Arts & Cultural Advisory Commission is to spur cultural growth through education and advocacy and to assist the City to create and implement a plan for the placement of public art within the community.

Policy Compliant:

Per Surprise Municipal Code Chapter 2, Article X. Sec. 2-367(c), Expenditures from the Municipal Art Fund shall require City Council approval, and shall be made in accordance with a Public Art Program policy and any rules adopted in accordance therewith. This item is compliant with City and Council policy.

Financial Impact:

This item will allow for expenditures up to $450,000 toward the completion of the approved Stadium Art project.

Budget Impact:

This item represents a movement of budget authority in the amount of $450,000 from Contingency within the Municipal Arts Fund for the Stadium Art project R51020 to further the City's art program. This action represents a transfer of spending authority and does not increase or decrease the total adopted citywide expenditure budget.

FTE Impact:

This item does not have an impact on current staff levels.

ATTACHMENTS:

1. Res 2022-03 - Stadium Art
2. RSP_City_of_Surprise_Spring_Training_Art_Proposal_Final_11-22
3. Stadium Art Presentation

RESOLUTION # 2023-03

A RESOLUTION OF THE MAYOR AND COUNCIL OF THE CITY OF SURPRISE, ARIZONA, AMENDING THE FISCAL YEAR 2023 BUDGET BY MOVING BUDGET AUTHORITY OF $450,000 WITHIN THE MUNICIPAL ART FUND FROM CONTINGENCY TO PROJECT R51020 FOR THE STADIUM ART PROJECT AND AMENDING THE FISCAL YEAR 2023 CONTRACT AWARDING AUTHORITY LIST BY INCREASING THE STADIUM ART PROJECT ITEM TO $450,000.

WHEREAS, the mission of the Surprise Arts & Cultural Advisory Commission is to spur cultural growth through education and advocacy, and to assist the city to create and implement a plan for the placement of public art within the community;

WHEREAS, the Surprise Arts & Cultural Advisory Commission desires to place two pieces of artwork at the Surprise Spring Training Stadium;

WHEREAS, the Surprise Arts & Cultural Advisory Commission reviews proposals and provides recommendations to the City Council for final action;

WHEREAS, the FY2023 budget was adopted and did not include funding for the Stadium Art project;

WHEREAS, this action will necessitate a budget amendment;

WHEREAS, the FY2023 budget, including the FY2023 Contract Awarding Authority List, was adopted by Council Resolution #2022-56 on June 7, 2022;

WHEREAS, the City of Surprise Administrative Policies requires the approval of the Mayor and Council for budget amendments of this nature and for contracts over $50,000 not previously approved as part of the Fiscal Year 2023 adoption; and

WHEREAS, the City of Surprise Procurement Code §2-338 (d) requires the authority of the Mayor and Council when the cost to the city is greater than $50,000;

NOW, THEREFORE, BE IT RESOLVED by the Mayor and Council of the City of Surprise, Arizona, as follows:

Section 1. That the statements and schedules attached as ***Exhibit A*** and incorporated by reference are adopted, amending the Fiscal Year 2023 budget and the Contract Awarding Authority List of the City of Surprise, Arizona for the fiscal year July 1, 2022 through June 30, 2023.

APPROVED AND ADOPTED this _____day of _____, 2023.

Skip Hall, Mayor

Attest:

Sherry Aguilar, City Clerk

Approved as to form:

Robert Wingo, City Attorney

Exhibit A

1. Appropriation - The allocation below represents the moving of budget authority in the amount of $450,000 from Contingency with the Municipal Arts Fund for the Stadium Art project R51020. To further the City's art program. This action represents a transfer of spending authority and does not increase or decrease the total adopted citywide expenditure budget.

Fund	Department	Project/Category	Rev/ Exp	Current Budget	Increase/ (Decrease)	Amended Budget
Municipal Art Fund	General Operations	Contingency	E	538,900	(450,000)	88,900
Municipal Art Fund	Human Svcs and Comm Vitality	#R51020 Art Stadium	E	7,000	450,000	457,000
			Expense Total	**545,900**	**-**	**545,900**
			Revenue Total	**-**	**-**	**-**

2. Contract Awarding Authority List (CAAL) – Council approved the FY2023 CAAL as part of the FY2023 Budget Adoption on June 7, 2022. The capital line item for the Stadium Art project was not included. The amount is based on the proposal received by the selected artist. With this budget amendment, the stadium art line item will increase by $450,000.

Reference #	Current Description	Current Amount	Increase/ (Decrease)	Amended Amount
23183	R51020 - Stadium Art	0	450,000	450,000

SPRING TRAINING STADIUM ART

CITY OF SURPRISE

RSP

Proposal for Public Art
City of Surprise – Spring Training Stadium Art
11.16.2022 | 11:00 AM

INTRODUCTION

Thank you for the opportunity to propose two public art concepts for the first and third base entries of the City of Surprise Spring Training Stadium. We have thoroughly enjoyed developing these ideas and are honored to be able to share them with you.

While on the surface, our team may seem unconventional since we are artists practicing in the realm of architecture, that alone adds a new perspective to the City of Surprise's public art offering. What we bring to the table is equal parts technical ability and artistry– and it might go without saying, but we are very comfortable working in the built environment. What is unique about our team is that we work in a multitude of materials and solutions. We offer a completely customized approach, rather than a preset solution or set of materials. Our projects range from buildings to metal toys to murals to building signage monuments. We enjoy the challenge of each project, understanding the right materials and solution to the given problem.

We have developed two concepts that we think will be exciting and dynamic additions to the City of Surprise's public art portfolio. We have tapped into the rich history of the city, visited the stadium site to understand the conditions and context of the area, thoughtfully selected materials that will endure the arid climate and chosen visuals that will engage residents and visitors of all ages.

We are proud to introduce you to our two concepts: **BOUNCE** and **SWING**.

YOUR TEAM

JASON PLOSZAJ, AIA

Principal-in-Charge

[redacted]

LIZ TAYLOR, NCIDQ, SEGD

Experiential Designer / Project Manager

[redacted]

VICTOR IRIZARRY, NOMA, ASSOC. AIA

Artist & Senior Project Designer

[redacted]

AESTHETIC QUALITY & ARTISTIC MERIT

1. Concept, vision and craftsmanship.

What is it about sports that engages us and excites us? The collective gathering to experience something together, the hope to see something spectacular, the appreciation of athleticism and sportsmanship, the shared time together with family and friends? Sports crosses political divisions and generations as a meaningful, positive space to enjoy together collectively. This reflects the importance of a facility like the City of Surprise Spring Training Stadium as a place that unites us.

In approaching this opportunity to create flagship art installations at the first and third base entries of the City of Surprise Spring Training Stadium, our goals were to create joyful art that would draw people in to interact with it, and that would be both memorable and unique to Surprise. By distilling down the very elements of baseball while connecting back to the history of Surprise, we felt that we could best connect to the residents, the city and visiting fans.

In our two proposed concepts, we explored two elements of baseball: the ball after a successful hit and the swing of the bat. The kinetics of baseball are where the excitement of the game lies, and we wanted to bring those very elements to the art installation.

2. Potential to engage, inspire and express Surprise's unique values, character, image, identity and to contribute to a strong sense of place, neighborhood pride and social interactions.

It was important to our team to relate our pieces to Surprise, its unique history, and its community members. From its earliest establishment, Surprise has been a place of innovators and risk takers. There are very few cities that can trace their roots back to the 1930's and find a woman, especially with the business acumen of Flora Mae Statler, at the helm of its development.

In addition to this tremendous history, Nancy Oden Butler developed plots of land for diverse populations of immigrants. Surprise has set its history upon pioneering and inclusion.

Along with the history of its people, Surprise has a rich history of agriculture that is vital to the success of the community and the state. With a nod to Flora (whose name aptly means plant life) and Surprise's agricultural heritage, we have added elements to our design that reflect this legacy, which we think the community will be delighted with. In our concept for first base, Bounce, we designed a custom pattern to be water jet cut into the metal, a design reflective of the cotton crops and other agriculture in Surprise. This recognition of cotton fields that turned into baseball fields is a recognition of the changing dynamic of Surprise and its bright future ahead.

3. Potential to expand the reach of the public art collection in terms of scale, concept and media represented.

Our team did extensive research on the growing collection of public art in Surprise. Taking the collection into account, we wanted to add two dynamic new pieces to the offering. Because these pieces will be placed at the ballpark, we wanted to focus on joy, interaction, and large scale so that these pieces would be dynamic additions that are memorable and unique to the city. Our proposed designs have a modern feel in material, shape and color that support Surprises progress and nod to the future. Since they are also designed for shade, these pieces lend themselves to public interaction, "Instagram" moments and a pleasant spot to wait in the queue. These pieces connect to the community element of baseball but are much more than that. We are proud of our concepts and it is our hope that they add meaningful value to the urban fabric of Surprise for decades to come.

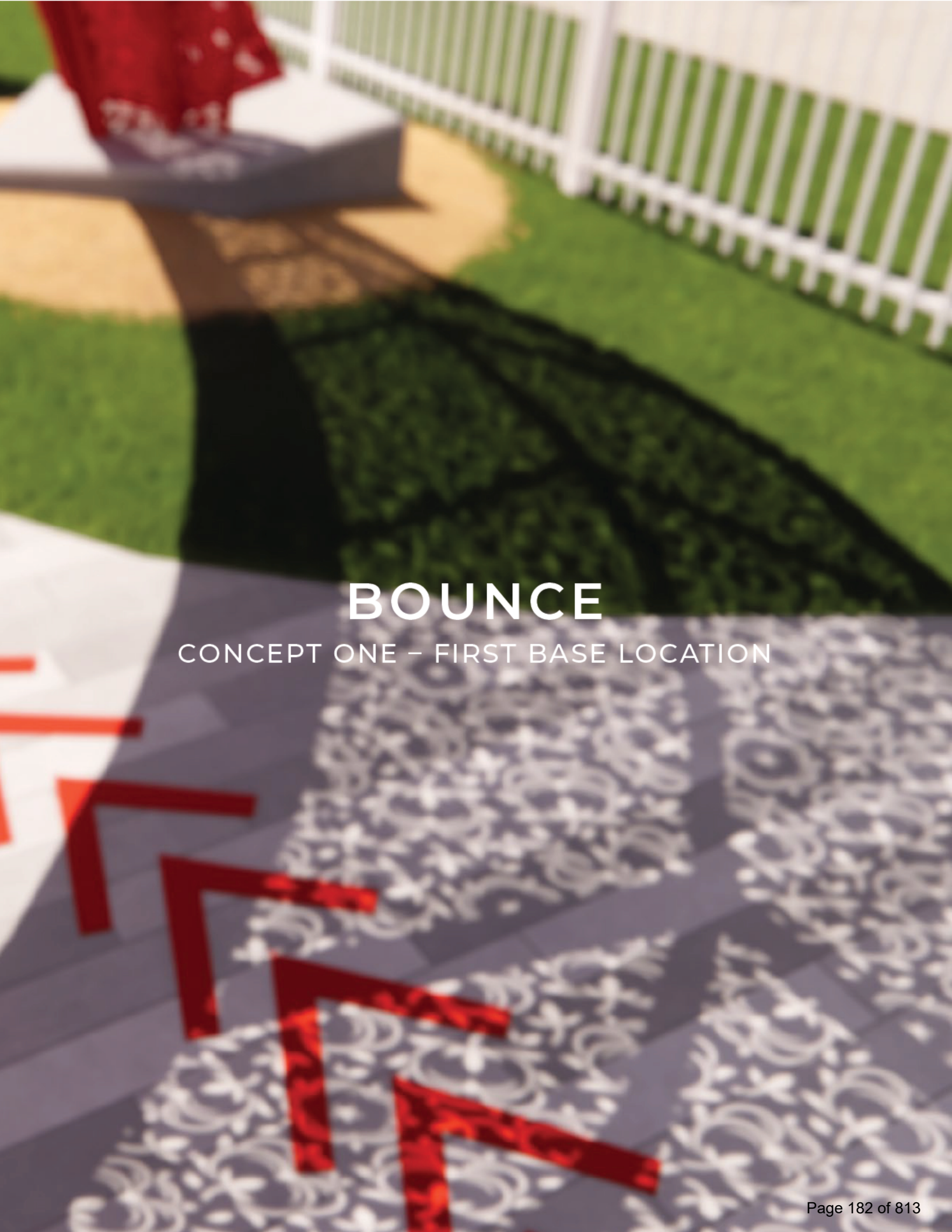
BOUNCE
CONCEPT ONE – FIRST BASE LOCATION

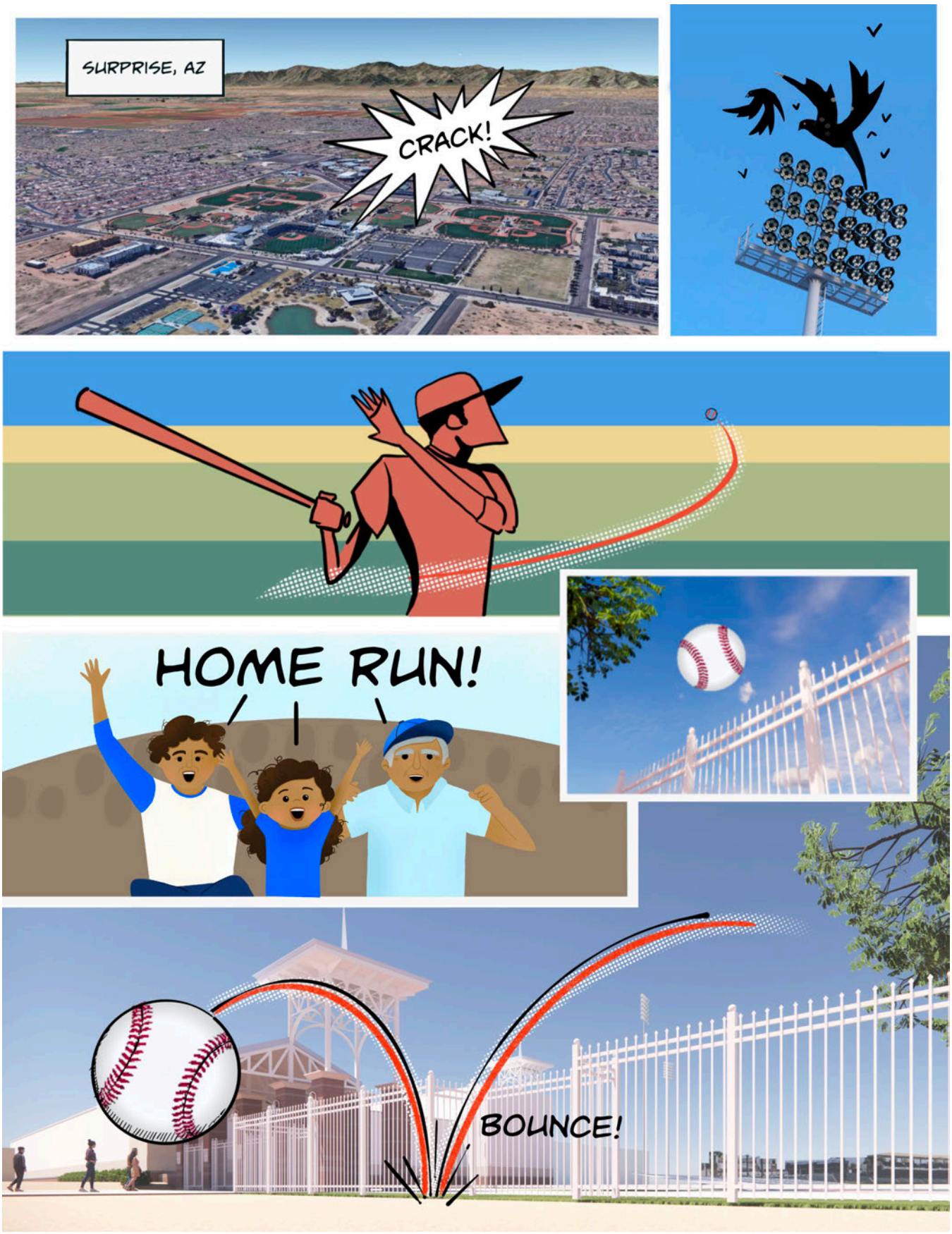
SURPRISE, AZ
CRACK!
HOME RUN!
BOUNCE!

BOUNCE

CONCEPT ONE | FIRST BASE ENTRY

Watching a ball knocked out of the park is a rare and exciting prospect for any spectator. We imagined a family– a grandfather, a father, and his young daughter, Flora– spending the day together at the ballpark. In the excitement of watching the ball soar past the fence, we imagine them cheering and smiling and making a shared memory. **BOUNCE** is a continuation of the ball's trajectory beyond the fence. We imagine the ball, supersized, bouncing on the ground with such force that it continues in its trajectory only to become suspended in mid-air like seeing a moment frozen in time. This is what we all want; to freeze our best shared moments so they last a little longer.

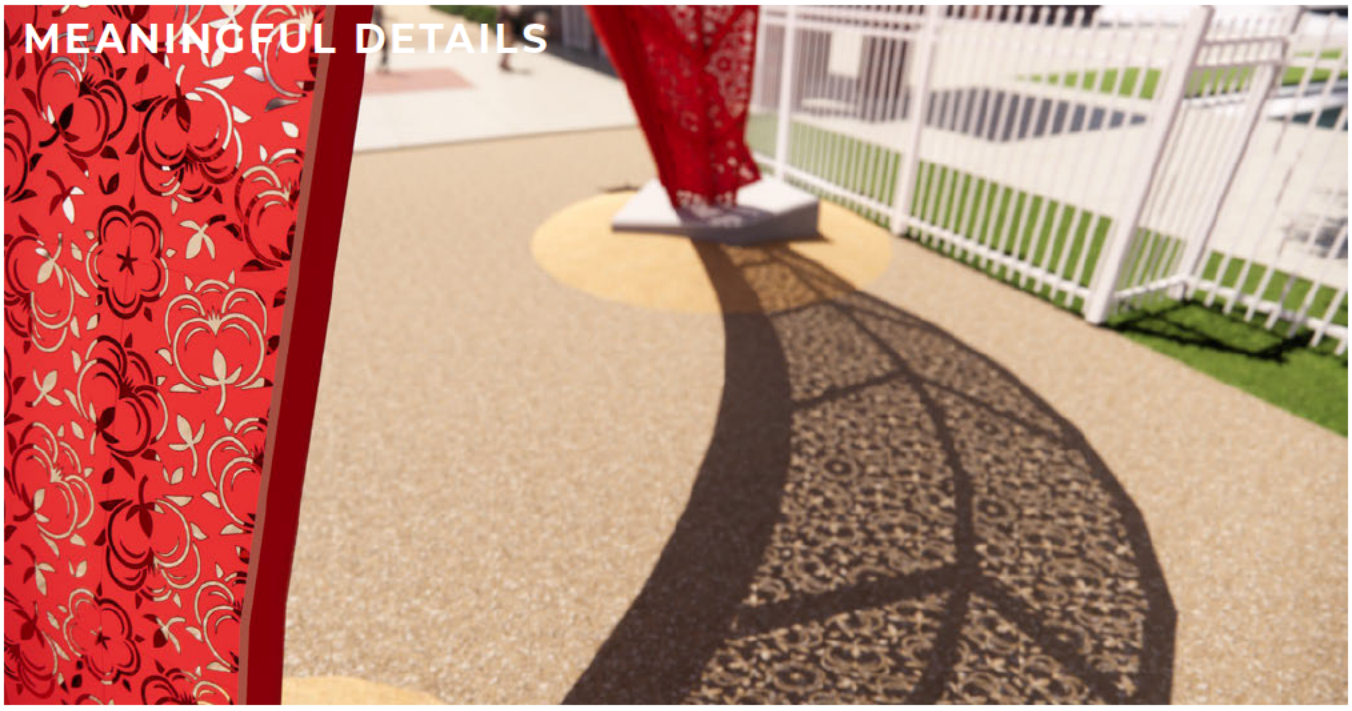

As we developed the shape of the ball's bouncing path, we expanded the shape so that the path is clearly perceived and shade is created. Using sheets of steel that are water-jet cut with a pattern of cotton blowing in the wind, we created a lacy shade structure that reflects the agricultural roots of Surprise. From cotton fields to baseball fields, the city is evolving and **BOUNCE** helps to tell that story.

At night, the path of the ball is traced in LED lights, the apex of which is a glowing baseball with rings around it that will be mechanically moved by wind.

LEGEND:

01 GLOWING 24" ACRYLIC BASEBALL

02 WATER-JET CUTTING: 14 GA. STEEL SHEET AND STEEL FRAME, PAINTED: RUSTOLEUM ENAMEL OR EQUIVALENT

03 INTEGRAL COLOR CAST IN PLACE CONCRETE "BASEBALL BASE"

04 RUBBERIZED SURFACE "MOUND" AREA AROUND "CONCRETE BASE"

SWING
CONCEPT TWO – THIRD BASE LOCATION

SURPRISE, AZ
CRACK!
GREAT SWING!
YAY!!
WHAT A HIT!!

SWING

CONCEPT TWO | THIRD BASE ENTRY

Now we imagine Flora and her family chatting about the various players and their strengths. Her dad and grandfather teach her the rules and in turn, pass down a love for the game. The couple sitting next to them share their popcorn with Flora. They are all impressed by the prospect of the ace pitcher throwing a no-hitter and the newcomer who swings with such precision. We imagine the batter's swing in stop motion, each movement perfectly choreographed for a precise hit. Artistry and athleticism. Built on the same foundational shapes as Bounce, so that they will be visually complementary, our second concept, **SWING**, harnesses the undulation of the bat and forms an elegant canopy for the fans below to enjoy. We attend sporting events to see athletes in peak form and to share the benefits of their years of mastery and to connect with one another in a positive shared experience.

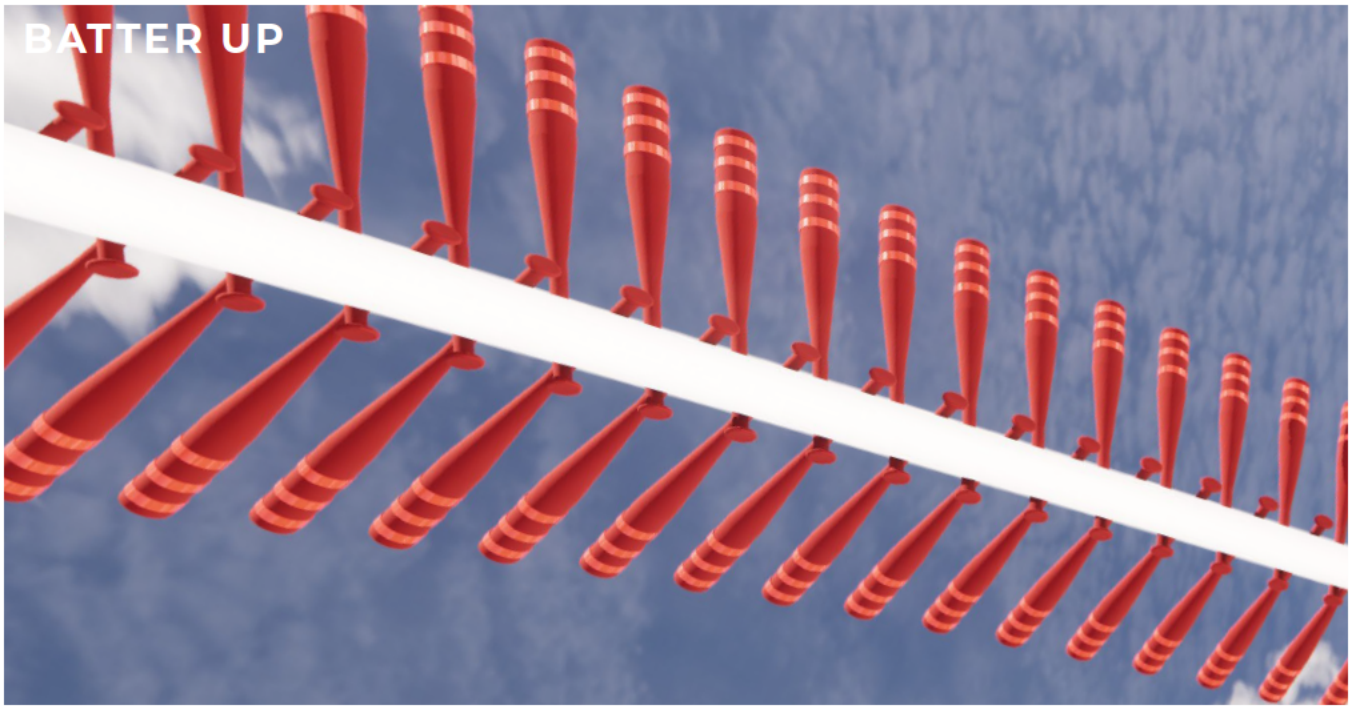

An impressive 238 aluminum bats make up the canopy. The angled pattern also plays off the stitching on a baseball.

We chose a different approach to lighting our **SWING** concept. With its location adjacent to the parking lot and the ability to have more space around the piece without a busy road, we elected a two-point approach. First there will be general in-ground up lighting to light the sculpture from below. Second, the ends of the baseball bats will have reflective tape applied that when photographed with a flash or flashed with a light (such as a headlight) will reflect back at the source. This creates a fun interactive moment and a dynamic photo opportunity.

LEGEND:

01 ALUMINUM BASEBALL BATS, PAINTED: RUSTOLEUM ENAMEL OR EQUIVALENT

02 REFLECTIVE TAPE. TO BE PLACED AT EACH BAT TIP.

03 ALUMINUM 8" TUBE, PAINTED: RUSTOLEUM ENAMEL OR EQUIVALENT

04 INTEGRAL COLOR CAST IN PLACE CONCRETE "BASEBALL BASE"

05 RUBBERIZED SURFACE "MOUND" AREA AROUND "CONCRETE BASE"

ADDITIONAL CRITERIA

BOTH CONCEPTS

PLACEMENT & SITE

1. Relationship of the work to the site in terms of scale, materials and conceptual appropriateness.

In our research and site visit, we felt that both locations needed a large scale, dynamic art piece that would activate the allotted space. Since the site is a place of fun and excitement, we wanted our concepts to reflect that with:

- bright color that contrasts well with the surrounding area, allowing each piece to act as a beacon
- sturdy materials that can be easily maintained
- addition of shade for the fans and residents in this area

Both sites are large enough to accommodate a large-scale piece that would be dynamic when viewed from the street or up close. We feel that both solutions will activate the site and add excitement to stadium visits.

2. Responsiveness and relevance to site context (architecture, uses, function, history, development, landscaping, and sociocultural context)

We are excited to propose two concepts that have thoughtfully integrated the history of Surprise, the playfulness of baseball, and the addition of shade to the area. While landscape design is out of our scope for this proposal, we wanted to offer a suggestion of what could be done with the landscape in the future to further improve the experience of this space, which can be seen in these renderings. Our full vision is for a place for people to use before and after games, to meet up and interact. The addition of the landscape design with features like an integrated bench, is a way to enhance this area even further. Surprise is a family-friendly community and this is a gathering place that supports connection and camaraderie.

BOUNCE – AERIAL WITH SUGGESTED LANDSCAPE

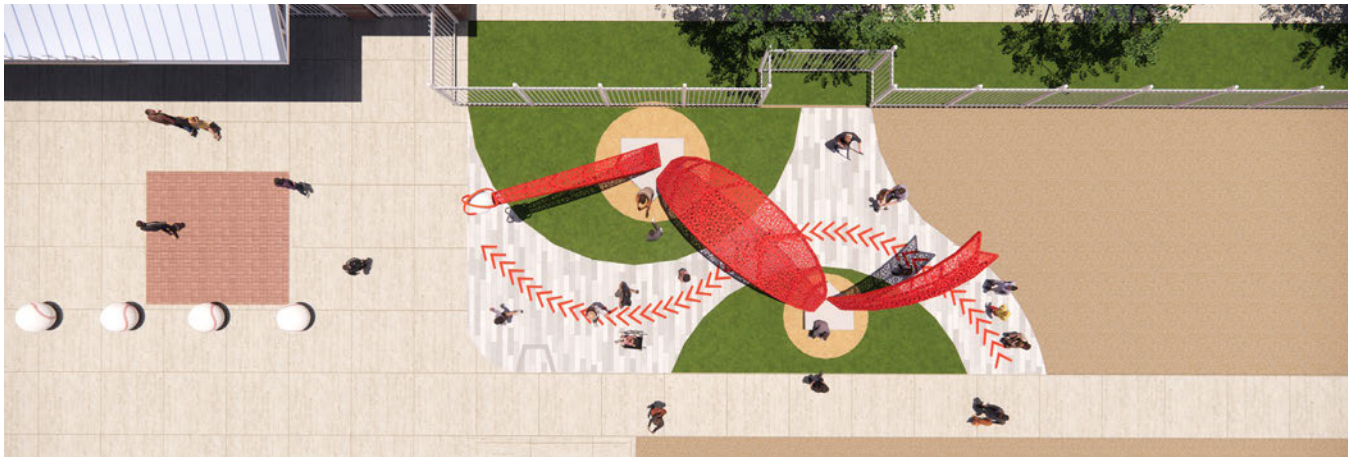

SWING – AERIAL WITH SUGGESTED LANDSCAPE

PLACEMENT & SITE *CONTINUED*

3. Potential to anchor and activate the site so the art becomes a point of pride for tourists and residents.

The site and location– both at the first base entrance and the third base entrance– are incredible opportunities to further enhance the game day experience, while also drawing in tourists and residents to visit in the off season. The concepts are meant to act as beacons and natural meeting points, allowing friends and family members to use the art as a landmark to congregate after the game or meet before entering the stadium.

The first base side is highly visible from Bullard Avenue and the **BOUNCE** concept has been designed to provide a high impact and memorable art piece that will make passersby want to stop.

The third base location is more secluded from any main thoroughfare, but is still prominent in relation to parking. The **SWING** concept is design to compliment the existing landscaping and provide a gateway into the stadium.

Adding public art to the stadium grounds is an excellent way to add to the City's existing portfolio of art. **BOUNCE** and **SWING** were designed to complement the existing portfolio of work, while the striking color, size and energy behind both pieces will provide something new to Surprise.

Both concepts were developed in a way to provide an "instagram-able" moment for visitors, residents and tourists. Our goal is to create art that brings a smile to your face and makes you want to pull out your phone to take a picture.

4. Provision of convenient public access to the artwork.

Both locations are easily accessed by the public. Conveniently located at the two main entry points to the ballpark, they will be easy to walk to and around.

5. Unrestricted visibility of the artwork for the public.

As we designed each piece we carefully considered scale, height, position and color to ensure each piece would be eye catching even from a great distance. Both concepts, as well as their placements, are highly visible and easily seen by the public.

6. Requirements for parking or ADA access accommodation.

Both concepts are located within a short distance to parking. As we designed each piece we took into consideration a diversity of users. Both can be walked or wheeled under and bright colors are used to make them stand out visually against the surrounding context.

7. Utility requirements for installation of artwork.

Specific power loads will be determined when the concepts are finalized, at which point we will be coordinating with a licenses electrical subcontractor. It is our understanding that the utilities available at both sites are more than sufficient for the lighting required by either design.

FABRICATION, HANDLING & INSTALLATION

1. Conformance with City zoning and design guidelines.

We reviewed the City of Surprise's Zoning and Design Guidelines specific to public art, plazas, and open space to ensure that our proposed designs meet those guidelines. Both proposed designs will maintain zoning requirements such as access to public walkways and maintaining lines of sight to and from public sidewalks. Additionally they will provide the memorable "sense of place" that is desirable to the city, engaging residents to interact with the art, and enhancing the identity of the building.

2. Determination that projected costs are accurate and realistic.

We will be collaborating with the following local partners for fabrication and installation:

- Stevens-Leinweber Construction – Contractor
- Bollinger Atelier – Fabricator
- Caruso Turley Scott – Structural Engineer

Throughout the design process, we have collaborated on costs, priced various fabrication methods for the two designs, and created a high level installation approach. At the time of this submittal, we believe our estimated costs are accurate, though the cost of materials has been erratic since 2020 and we could potentially see a change in material costs, positive or negative.

3. Written estimates from technical support and fabrication contractors.

As both concepts were finalized we collected written estimates from our contractor partner, fabricator and structural engineer. We also have a high level pricing plan for landscaping improvements for each piece should the City be interested in exploring, although it is important to note that those landscape improvements are not part of this contract. All estimates can be provided upon request.

4. Definition of any special challenges for installation

We have discussed the logistics of installation with our fabricator and contractor partners and do not foresee any special challenges. As the installation date approaches we look forward to working closely with the City of Surprise to help ensure a smooth and efficient installation process with minimal disturbances to the surrounding area.

5. Site preparation required for installation of the artwork.

The project team has visited the site and have not observed any conditions that would warrant special site preparation prior to installation. Basic site prep such as plant removal may be requested.

6. Temporary works only) Process and costs for restoring the site to its original condition when the artwork is removed

Not applicable.

7. Required City reviews and approvals (in addition to those by SACAC).

We will participate in any required City reviews and approvals requested or required by the City of Surprise. Additionally, we pride ourselves on being collaborative and welcome the opportunity to obtain stakeholder feedback, share our process, and engage with the surrounding community. We look forward to working with the City to identify the most appropriate ways to share the details of this project.

8. Estimate of the equipment, vehicles and workers needed to hang, transport, install and move the artwork.

RSP and our team will coordinate the equipment, such as a crane, as well as the labor which would be needed for installation. As the project is finalized we will work closely with the City to identify any special needs required for installation day, which might include: appropriate road closure / traffic control during installation, access to City facilities professionals to provide access to utility boxes, stadium security professionals to keep the entrances closed or guarded during install.

MAINTENANCE & CONSERVATION REQUIREMENTS

1. Suitability of the artwork for outdoor display or for the proposed indoor environment.

As we developed our concepts, we were thoughtful about materiality, not only from a visual standpoint, but also for durability and ease of maintenance. We decided to go with steel for both concepts (aside from the aluminum baseball bats in Concept 2, **SWING**), for its sturdiness and longevity. Rather than Powder-coat, we elected to use a Rustoleum paint finish. This is a long-lasting paint that will do well in our harsh Sonoran Desert environment and will only require repainting every 10 - 15 years. We recommend using the same paint for the aluminum bats used in Concept 2, **SWING**.

2. Potential long-term effects of weather and the environment on the artwork.

Though these pieces will be in a harsh desert climate and subject to Arizona's unrelenting heat and sunshine, we have been thoughtful in the selection of materials to best suit the environment. Over time, the painted finish will need to be refreshed. Our fabricator, Bollinger Atelier, worked on a similar project called Jurassic Age, a metal dinosaur sculpture located at the Phoenix Art Museum. That sculpture has the same paint finish we are recommending, and it is only now getting its first repaint after 12 years. We feel this will be the simplest maintenance for the City of Surprise facilities department, while still being striking and visually impactful.

3. Expected lifespan of the artwork in a public setting, assuming regular maintenance.

As a highly durable metal structure the expected lifespan of each piece would be estimated at 50+ years or more.

4. Costs and level of effort needed for maintenance of the artwork

Ease of maintainability was top of mind as we developed these concepts. The main cost associated with maintaining the artwork would be a fresh coat of paint, estimated at $7,500 per structure (in today's dollars), and the labor needed to complete.

5. Recommended maintenance requirements and schedule.

Due to the use of highly durable materials there is no regular maintenance required. The general schedule for repainting the full structure should be dictated by how the paint weathers and ages, but likely every 10 - 12 years.

6. Quality of workmanship and materials.

We've selected a reputable fabricator, Bollinger Atelier, led by artisan Tom Bollinger. Tom and his team have worked successfully in Surprise in the past, having led with the fabrication of "The Learning Tree" by Joe Tyler, located at the Northwest Regional Library. Bollinger Atelier shares RSP's commitment to quality work and an emphasis on craftsmanship.

7. Methods to be employed to protect the work from graffiti and defacement.

The highly durable Rustoleum finish will protect the art from some graffiti which might be able to be cleaned or scrubbed off of the surface. If that is not feasible, the finish can be easily painted over to cover any unwanted graffiti or defacement. We will provide the City with exact specifications regarding type, color and kind of paint so that any touch-ups due to defacement can be easily handled by City staff.

8. Projected ongoing and periodic conservation costs.

As a piece of public art designed to for the outdoors there are no real conservation efforts that need to be established. Regular maintenance regarding repainting due to natural weathering is recommended, likely every 10 - 15 years.

9. Responsibility for conservation work - will it be done by the artist or by a qualified conservator

No specific conservation work will be needed for these concepts. City Facilities Staff Members or others can handle all necessary maintenance, no special skills or equipment will be needed for conservation.

LIABILITY & SAFETY

1. Assessment of whether the artwork, parts of it or its operation may represent a potential public safety risk.

Due to the nature of the type of designs we are proposing, there is always a potential risk of someone attempting to climb the artwork. Below we have outlined the measures we have designed to discourage this.

CONCEPT 1: BOUNCE

In the water-jet cut pattern, we made openings large enough to prevent fingers or clothing from getting stuck in the metal's negative space. We also provided enough space for a walk-through or wheel-through experience of the art. Though the work mimics a ball being hit out of the ballpark, we have kept the art far enough away from the fence so that the artwork cannot be climbed in order to gain entry to the park.

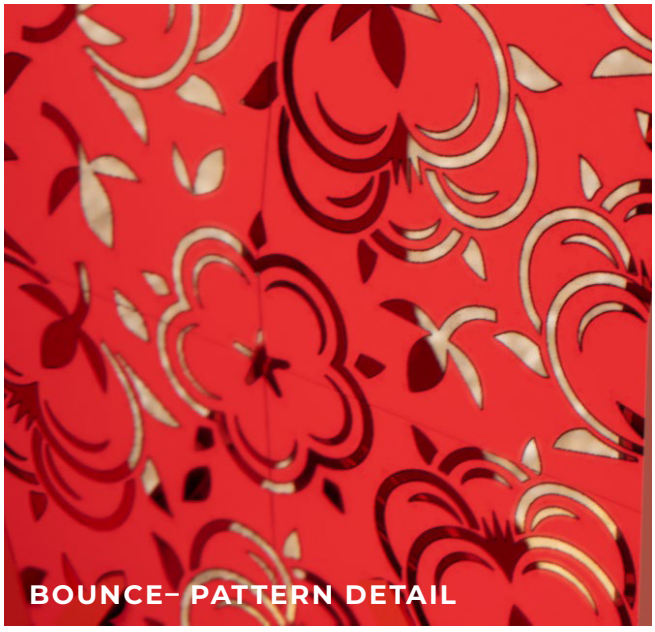

BOUNCE– PATTERN DETAIL

SWING– BAT HEIGHT

CONCEPT 2: SWING

By raising the canopy of bats to the 8' mark, it deters the temptation to climb or hang from the work. As with our Bounce concept, we have kept the art far enough away from the fence so that the artwork cannot be climbed in order to gain entry to the park.

We took into account the placement of the structure at both First and Third Base entries, positioning it far enough away from the fencing to prevent access into the ballpark via the art piece.

2. Conformance with building, electrical, fire code and other safety codes.

As a full service Architecture and design firm, RSP has multiple licensed architects on staff. In addition, we will be working with a licensed contractor and licensed electrician on this project to ensure all building, electrical, fire and safety codes are met.

3. Requirements for fencing or other security measures.

None required.

PRICING PROPOSAL
BOTH CONCEPTS

PRICING PROPOSAL

Below please find our pricing proposal which is identical to the online matrix in the procurement portal. We have provided lump sum fees for each concept as requested. While we have designed **BOUNCE** for the first base location and **SWING** for the third base location, if the City is interested in choosing only one concept and applying it to both locations we would be happy to explore and price that further.

LINE ITEM	DESCRIPTION	QUANTITY	UNIT OF MEASURE	UNIT COST	TOTAL
01	Concept One – **BOUNCE**	1	LS	$205,000	$205,000
02	Concept Two – **SWING**	1	LS	$195,000	$195,000
TOTAL					**$400,000**

NOTE: Throughout this proposal we have shown some options which include landscape enhancements. Those visuals were provided for inspiration and reference only and are not part of this cost proposal. We would be happy to price those components should the City be interested in adding additional scope to this project.

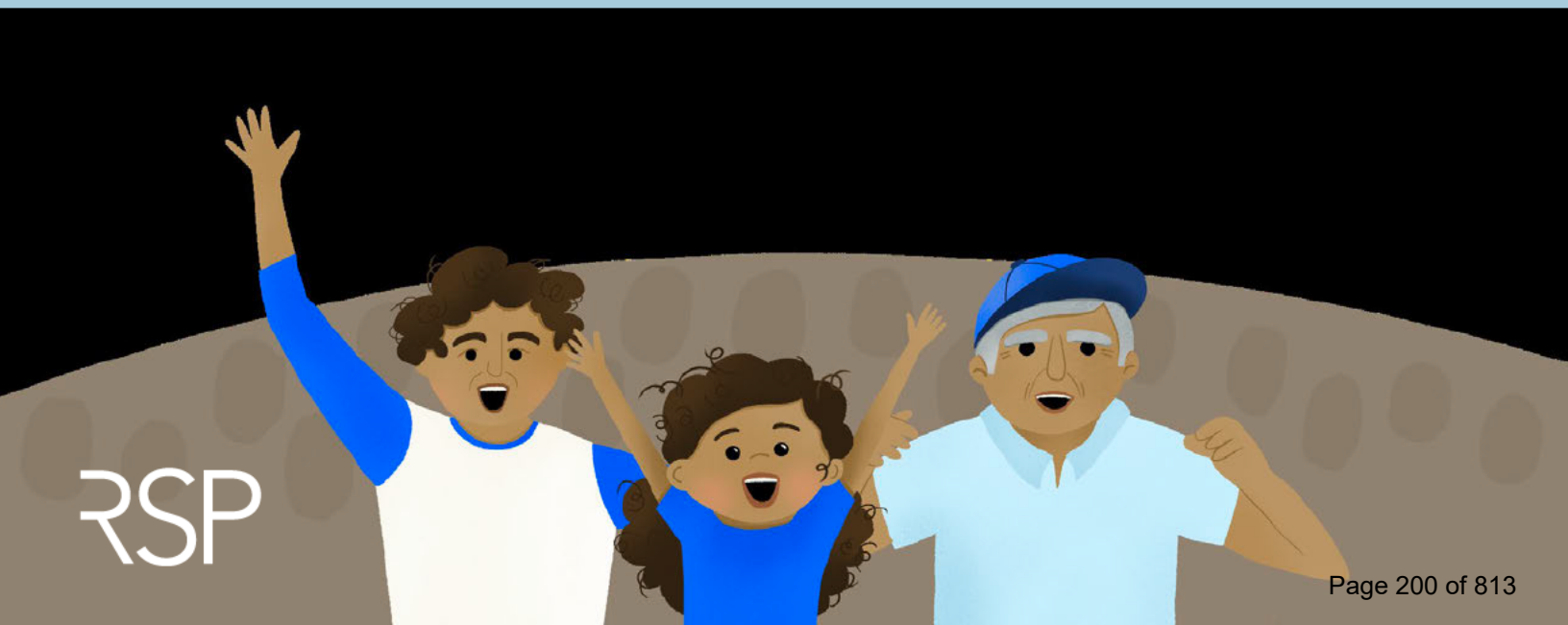

SURPRISE
ARIZONA

Stadium Art Project

Regular City Council Meeting
January 17, 2021

STADIUM ART

REQUEST FOR QUALIFICATIONS (RFQ)

- Two-phased selection:
  - Phase 1 – Review and selection of Artists based on qualification criteria
  - Phase 2 – Review & selection of Shortlisted Artists' submission of a conceptual artistic proposal
- Seeking qualified artists to design, fabricate and install its latest public art project outside the 1st and 3rd base entrance gates of Surprise Stadium.
- Creative piece or pieces which capture the spirit of baseball.
- Qualified artists will have the unique opportunity to create a work or works of art that not only serves as a welcoming entryway to the stadium, but also a signature piece or pieces that will be viewed and visited by hundreds of thousands of people annually, and present opportunities for additional exposure through photos and tags on social media.

STADIUM ART

PROPOSAL SCOPE

- New, original signature art piece or pieces to be installed outside of the 1st and 3rd base entrance gates of Surprise Stadium.
- The following directives were provided:
  - The art should have a general baseball nature and not be specific to either team.
  - Sculptures or depictions of ball players are not desirable
  - The art should stand out from what is typical of professional and recreational sports facilities
  - The art may be a piece that abstractly depicts, symbolizes, or characterizes an aspect or aspects of baseball
  - The selected piece is desired to be a design unique to the Phoenix metro area
  - The art must incorporate lighting into the design
  - Artists should consider incorporating color, and/or motion into the piece to add complexity

STADIUM ART

PROPOSAL SCOPE CONTINUED

- The following directives were provided:
  - Artists should keep in mind that the final piece will be visited by hundreds of thousands of people annually, and will receive exposure through promotional and social media.
  - When designing the architecture of the structure, artists must utilize timeless, durable, quality, and low maintenance materials which can withstand extreme weather conditions experienced in the Phoenix metropolitan area
  - Vertical elements are welcomed
  - Shade and/or kinetic elements are welcomed

Art Location

About the Artist

- RSP Architects, Ltd.
- Team comprised of experts who are well-versed in working with public entities, engineering professionals, designers, fabricators, stakeholders, and the public
- Based out of Tempe, AZ
- Three-member team with over 20 years of experience each

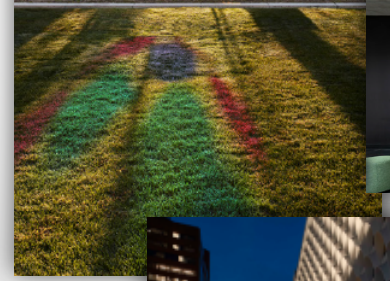

Proposed Concept – 1st Base

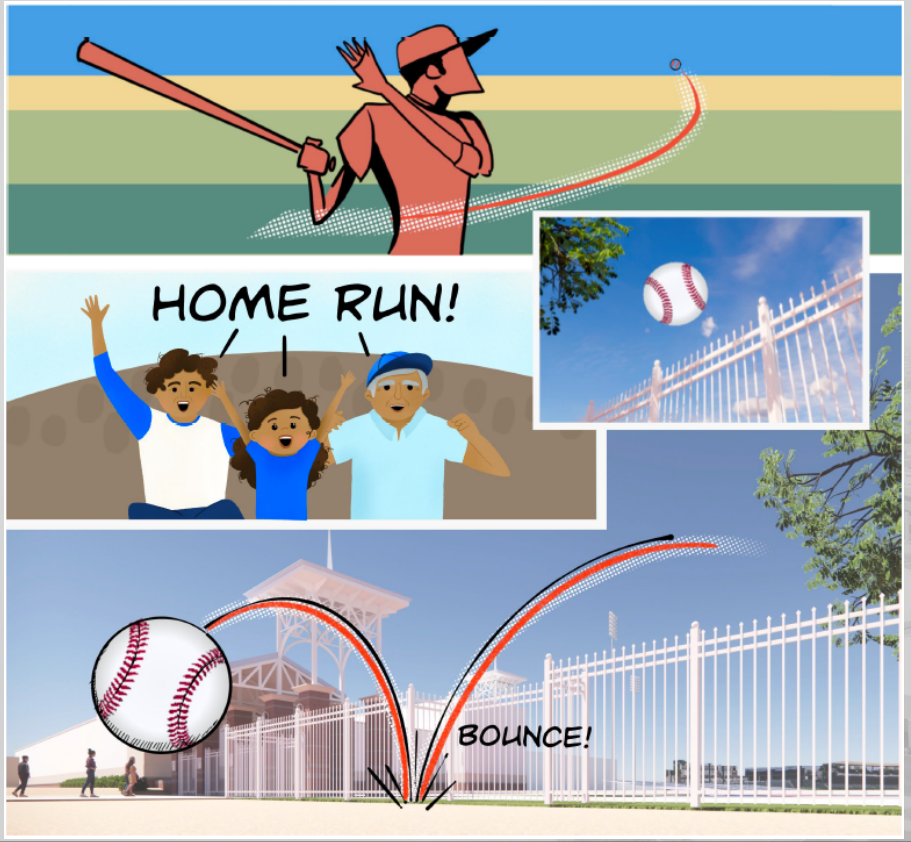

Proposed Concept – “Bounce”

Proposed Concept – “Bounce”

Proposal Details – 1st Base

- "Bounce"
  - Watching a ball knocked out of the park
  - Continuation of the ball's trajectory beyond the fence
  - Ball suspended in air, frozen in time; freeze our best shared moments so they last a little longer
  - Expanded shape to create shade
  - Sheets of steel that are water-jet cut with a pattern of cotton blowing in the wind; reflects the agricultural roots of Surprise
  - From cotton fields to baseball fields, the city is evolving and "Bounce" helps to tell that story

Proposal Details Continued

Materials

1. Glowing 24” acrylic baseball
2. Water-jet cutting: 14 ga. Steel sheet and steel frame, painted: Rustoleum enamel or equivalent
3. Integral color case in place concrete “baseball base”
4. Rubberized surface “mound” area around “concrete base”

Proposed Concept – 3rd Base

Proposed Concept – “Swing”

Proposed Concept – “Swing”

Proposal Details – 3rd Base

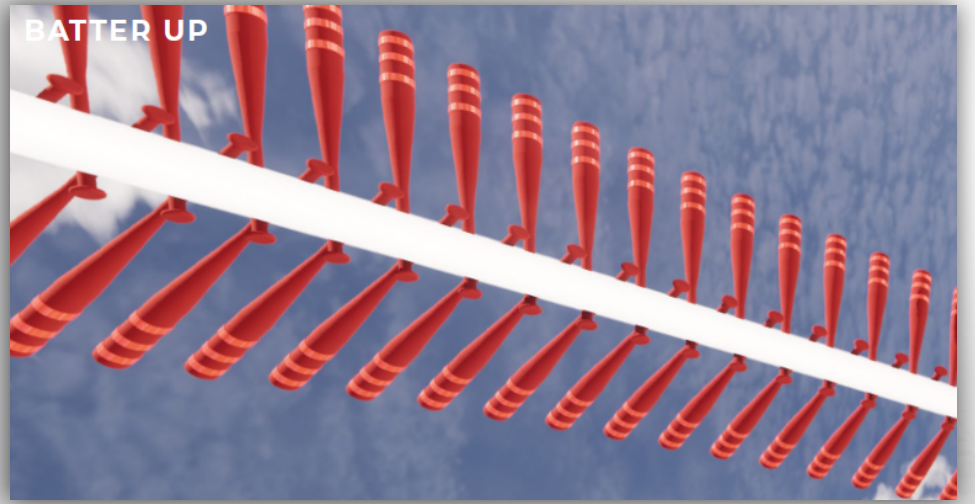

- "Swing"
  - Observing baseball players swing with precision
  - Imagine the batter's swing in stop motion
  - Built on the same foundational shapes as "Bounce"
  - Forms an elegant canopy for the fans below to enjoy
  - We attend sporting events to see athletes in peak form and to share the benefits of their years of mastery and to connect with one another in a positive shared experience

Proposal Details Continued

Materials

1. 238 aluminum bats make up the canopy
2. The angled pattern plays off the stitching on a baseball
3. Bats and white tube treated with Rustoleum enamel
4. Reflective tape on each bat tip
5. Rubberized surface “mound” area around “concrete base”

Additional Considerations

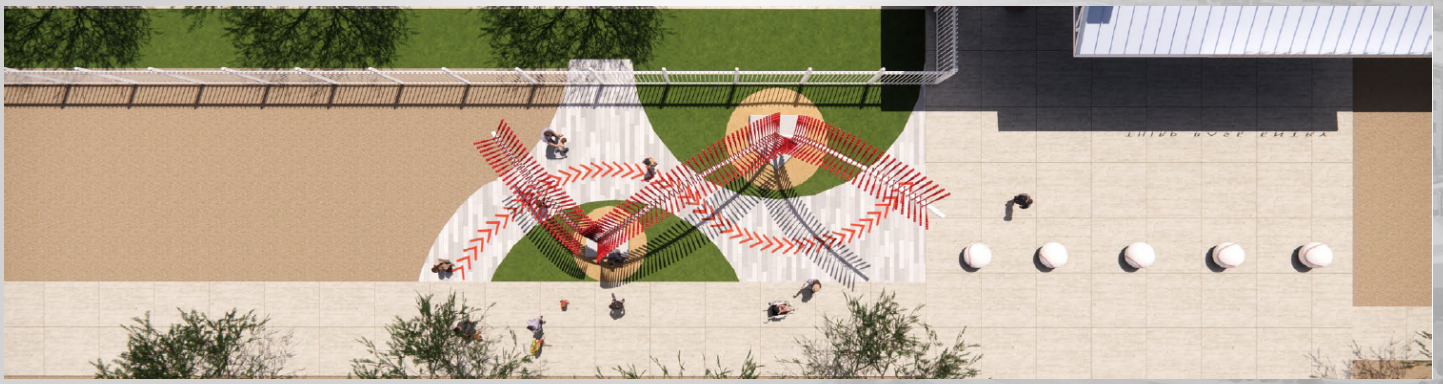

Safety Considerations

“Bounce”

- In the water-jet cut pattern, the openings will be large enough to prevent fingers or clothing from getting stuck in the metal’s negative space
- There is enough space for a walk-through or wheel-through experience of the art
- Though the work mimics a ball being hit out of the ballpark, the art will be placed far enough away from the fence so that the artwork cannot be climbed in order to gain entry to the park

“Swing”

- The bats sit 8’ above ground which will deter the temptation to climb or hang from the work
- The art will be kept far enough away from the fence so that the artwork cannot be climbed in order to gain entry to the park
- For both pieces - as a full service Architecture and design firm, RSP has multiple licensed architects on staff and will be working with a licensed contractor and licensed electrician on this project to ensure all building, electrical, fire and safety codes are met

Maintenance & Conservation

- Steel surface for both concepts for sturdiness and longevity (50+ years)
- Rustoleum finish: long-lasting paint that will do well in the harsh Sonoran desert environment and will only require repainting every 10-15 years
    - Will protect from graffiti which will be able to be cleaned or scrubbed off of the surface, otherwise painted over
- Fabricator: Bollinger Atelier, who previously worked on “The Learning Tree” by Joe Tyler, located at the Northwest Regional Library
- Piece is designed for the outdoors, so no real conservation efforts will need to be established other than regular repainting due to natural weathering
- Artist will be required to submit a full maintenance and care plan

SURPRISE
ARIZONA

QUESTIONS OR COMMENTS?

Thank You

CITY OF SURPRISE
Regular City Council Meeting

Council Meeting Date: January 17, 2023
Submitting Department: Water Resource Management
Staff Recommendations:

Contact Person:
District: Citywide

Consent: No Regular: Yes Public Hearing: No Report/Discussion: No

Agenda Wording:
Consideration and action authorizing the City of Surprise to pursue, and apply for, financial assistance from the Water Infrastructure Financing Authority (WIFA) in an amount not to exceed $35,000,000 for the SPA 1 Capacity and Enhancements Capital Improvement Project, P71490; Resolution #2023-07.

Motion:
I move to approve Resolution #2023-07.

Background:
This City Council item is associated with the authorization required by WIFA to apply for financial assistance. The funding amount being requested through the WIFA Clean Water State Revolving Fund is $35,000,000. This funding will be used to implement the construction phase of the Special Planning Area 1 Water Reclamation Facility Capacity Enhancements. The project will replace 3.5 million gallons per day of wastewater treatment plant capacity. The project will include the construction and installation of jet aeration, recharge basins, headworks improvements, and chemical building improvements.

If the financing application is approved by WIFA and subsequently by City Council, the Water Resource Management Department will pledge the revenues from the City's Water and Wastewater Utilities for the repayment of the WIFA loan. The debt service anticipated from this request will not require water or sewer rate adjustments. Additionally, WIFA has identified that a significant portion of the project may be eligible for principal forgiveness. Prior to the loan funding, City Council will be required to authorize the repayment agreement, and it is anticipated that this will occur in May of 2023.

Objective Analysis:
Financing projects through WIFA provides for more favorable interest rates and savings to the City. Without approval of this resolution other more expensive funding resources would need to be pursued.

Policy Compliant:
This item is compliant with the city's Comprehensive Financial Management Policies.

Financial Impact:

Approval of this resolution will not have an immediate financial impact. However, if the application for financial assistance is approved by WIFA the Sewer Operations fund will be responsible for yearly debt payments of approximately $2,600,000 for 20 years. Final debt payment will be dependent on the final loan amount and the interest rate. The local funding portion of $718,294 for Design and Engineering will be funded by the Sewer Utility Capital Fund.

Budget Impact:

Approval of this resolution will not have a budget impact this fiscal year. The anticipated debt service associated with the repayment of the WIFA loan, if approved, will be incorporated in future year budgets. The local funding portion of $718,294 for Design and Engineering will be funded by the Sewer Utility Capital Fund within project P71490.

FTE Impact:

None

ATTACHMENTS:

1. Resolution 683809339_v 1_Surprise WIFA CW 2022 - Loan Application.cao.II
2. WIFA Project Presentation
3. Exhibit B-Prior 2009 WIFA Final Loan Documents #91A137-10
4. Exhibit A-WIFA Application Documentation

RESOLUTION # 2023-07

A RESOLUTION OF THE MAYOR AND CITY COUNCIL OF THE CITY OF SURPRISE, ARIZONA, A MUNICIPAL CORPORATION OF ARIZONA, TO AUTHORIZE THE APPLICATION FOR A CLEAN WATER STATE REVOLVING FUND LOAN FROM THE WATER INFRASTRUCTURE FINANCE AUTHORITY OF ARIZONA

WHEREAS, the City of Surprise, Arizona, ("City") has identified a need for a wastewater capital improvement project; and

WHEREAS, pursuant to Arizona Revised Statutes, Section 9-571 ("A.R.S. § 9-571"), a city may construct, acquire, or improve a wastewater treatment facility with monies borrowed from or financial assistance ("loan" or "repayment agreement") provided by the water infrastructure finance authority of Arizona ("WIFA"). The WIFA loan application is set forth in Exhibit A;

WHEREAS, the City previously entered into a Repayment Agreement with WIFA, as set forth in Exhibit B;

WHEREAS, pursuant to A.R.S. § 9-571, a city with a population of one hundred fifty thousand persons or less may pledge the revenues of that city's utility system to the payment of the WIFA repayment agreement, if the pledge of revenues does not violate any covenant pertaining to the utility system or the revenues pledged to secure outstanding bonds or other obligations of the city;

WHEREAS, the City's Water Resource Management Director and the City's Finance Director have determined that revenues from Surprise's utility system that will be pledged to the repayment of the WIFA loan will not violate any other covenant pertaining to the City's utility system;

WHEREAS, the population for the City of Surprise is under 150,000 in population as of the most recent U.S. Census Date; and

WHEREAS, it is in the best interest of Surprise to pursue and apply for financial assistance from WIFA of an amount not to exceed $35,000,000 for such wastewater capital improvement project;

NOW, THEREFORE, BE IT RESOLVED BY THE MAYOR AND CITY COUNCIL OF THE CITY OF SURPRISE, ARIZONA, as follows:

Section 1. The City Manager or his designee are hereby authorized to apply for Clean Water State Revolving Fund financial assistance from WIFA.

Section 2. The City Manager or his designee are hereby authorized to take such actions as are necessary to apply for financial assistance in an amount not to exceed $35,000,000 payable from revenues of the City's utility system.

APPROVED AND ADOPTED this 17th day of January, 2023.

Skip Hall, Mayor

Attest:

Sherry Aguilar, City Clerk

Approved as to form:

Robert Wingo, City Attorney

Exhibit A:

WIFA Application Documentation

Exhibit B:

WIFA Sample FORM Repayment Agreement

SURPRISE
ARIZONA

SPA1 CAPACITY ENHANCEMENTS

Water Resource Management

Item Overview

- Consideration of a WIFA Application resolution
- P71490 SPA1 Project Overview

SPA1 Overview

Plant 1

- 1994
- 0.8 MGD
- Offline

Plant 2

- 1998
- 2.7 MGD
- Offline

Plant 3

- 2003
- 4.8 MGD
- Online

Plant 4

- 2008
- 4.0 MGD
- Online

Plant 5

- 2008
- 4.0 MGD
- Online

Paper Capacity= 16.3 MGD

Physical Capacity= 12.8 MGD

RECHARGE BASIN EARTHWORK
NEW BLOWER BUILDING
CHEMICAL BUILDING ENHANCEMENTS
HEADWORKS IMPROVEMENTS
RECLAIMED PUMP STATION REMEDIATION
PRIMARY TREATMENT TECHNOLOGY CONVERSION
Google Earth

Project Alternatives

Plant 6

- New 3.5 MGD Plant
  $80 Million ($22.86/gal)

Plant 1&2

- More plants to operate/ more staff needed
- Old technology/Not efficient
- Infrastructure
- Plant 1 = 28 years old
- Plant 2 = 24 years old
- Rehab cost
- $40 Million ($11.43/gal)

Project Alternatives Evaluated

Plant 4&5

- Less equipment to maintain
- New technology/Better control of treatment process
- Infrastructure
- 14 years old
- Upgrade Cost
- $35 Million ($10/gal)

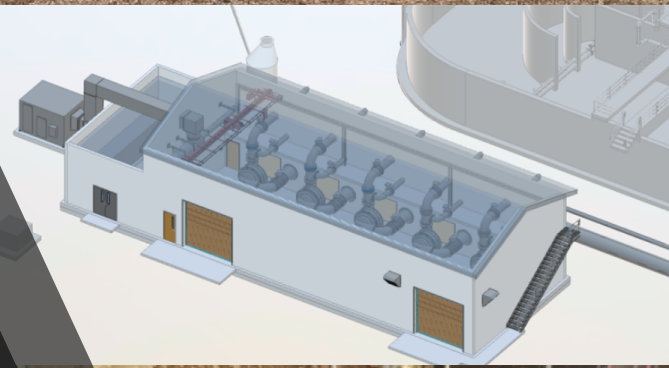

Project Funding

Existing Debt

Existing Debt (growth, DIF) of $22.3 Million, payoff 2036

WIFA Loan

$35 Million

4.5% Est. Interest Rate

20-Year Term

$2.62 Million Debt Service

Disbursement Loan

WIFA Opportunities

Eligible for Principal Forgiveness

Interest rate subsidy

No Increase to Existing Sewer Rates to Accommodate Debt Service Payment

Absorption of Capacity

- 25 years of capacity at 250,000 gallons per Year
- 15.7 MGD @ Buildout (2022 Integrated Water Master Plan)

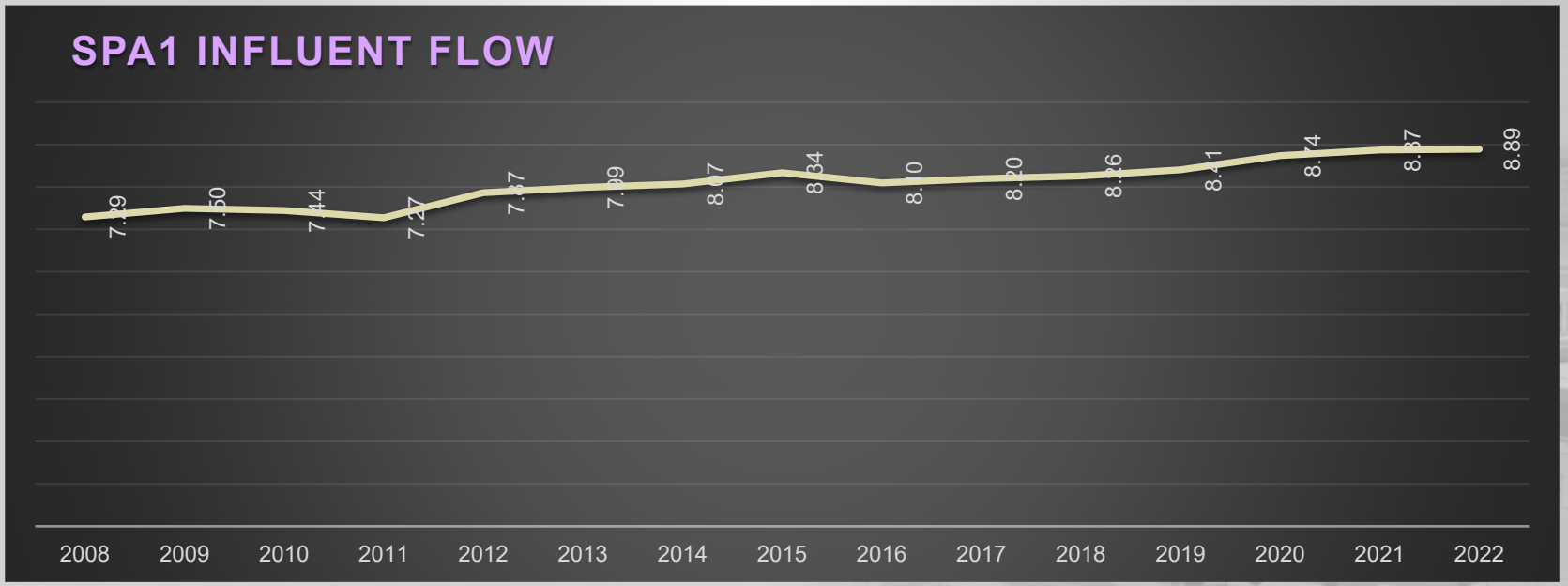

Timeline

- City Council Meeting Authorizing WIFA Application Submittal — January 17, 2023
- Project Finance Application Due to WIFA for April Board Meeting — February 17, 2023
- WIFA Advisory Board Meeting — April 13, 2023
- WIFA Board Meeting — April 20, 2023
- City Council Action Approving WIFA Authorization — May 2, 2023
- Construction Begins — July 2023
- End of Construction — June 2025

SURPRISE
ARIZONA

QUESTIONS OR COMMENTS?

Thank You

Water Infrastructure Finance Authority of Arizona

American Recovery and Reinvestment Act of 2009

City of Surprise

Loan Agreement #91A137-10

December 4, 2009

City of Surprise and

Water Infrastructure Finance Authority of Arizona

Borrower – Table of Contents

Document	Tab
City of Surprise's Borrowing Resolution	1.
WIFA Board Resolution	2.
Loan Agreement	3.
Loan Agreement Addendum – American Recovery and Reinvestment Act of 2009	4.
Exhibit A of Loan Agreement: Financial Terms and Conditions	5.
Exhibit B of Loan Agreement: Technical Terms and Conditions	6.
Exhibit C of Loan Agreement: Reporting Requirements	7.
Exhibit D of Loan Agreement: Source of Repayment and Rate Covenant Provisions	8.
Exhibit E of Loan Agreement: Debt Service Reserve Provisions	9.
Exhibit F of Loan Agreement: Replacement Reserve Provisions	10.
Exhibit G of Loan Agreement: Form of Opinion of Local Borrower	11.
Exhibit H of Loan Agreement: Tax Compliance Certificate of Local Borrower	12.
IRS Form 8038-G	13.
Standard Terms and Conditions	14.
WIFA Disbursement Requisitions Procedures Manual and Payment Requisitions (on CD)	

RESOLUTION # 09-154

A RESOLUTION OF THE MAYOR AND COUNCIL OF THE CITY OF SURPRISE, ARIZONA, TO AUTHORIZE THE APPLICATION FOR AND ACCEPTANCE OF A CLEAN WATER STATE REVOLVING FUND LOAN FROM THE WATER INFRASTRUCTURE FINANCE AUTHORITY OF ARIZONA ("WIFA").

WHEREAS, the City of Surprise (the "City") has identified a need for a waste water capital improvement project, and;

WHEREAS, it is in the City's best interest to pursue and apply for financial assistance from WIFA of an amount not to exceed $1,500,000 for the Litchfield Road Reclaimed Water Booster Pump Station #20726;

NOW, THEREFORE, BE IT RESOLVED by the City Council of the City of Surprise, Arizona, as follows:

Section 1. The Director of Public Works, Robert Beckley, of the City of Surprise is hereby authorized to apply for Clean Water State Revolving Fund financial assistance from the Water Infrastructure Finance Authority of Arizona.

Section 2. The Director of Public Works, Robert Beckley, is authorized to take such actions as are necessary to apply for financial assistance in an amount not to exceed $1,500,000 payable from revenues for the wastewater system.

Section 3. All actions of the officers and agents of the City of Surprise which conform to the purposes and intent of this resolution and which further the completion of the application as contemplated by this resolution, whether heretofore or hereafter taken are hereby ratified, confirmed and approved. The proper officers and agents of the City of Surprise are hereby authorized and directed to do all such actions and things and to execute and deliver all such application documents on behalf of the City of Surprise as may be necessary to carry out the terms and intent of this resolution.

Section 4. WIFA is authorized to approve the loan and upon its approval the Director of Public Works, Robert Beckley, is authorized to accept and execute the loan on behalf of the City of Surprise.

[SIGNATURES APPEAR ON THE NEXT PAGE.]

APPROVED AND ADOPTED this 24 day of September, 2009.

L.E. Truitt, Mayor

Attest:

Sherry Aguilar, City Clerk

Approved as to form:

Michael D. Bailey, City Attorney

Yeas: Mayor Truitt, Vice Mayor Johnson, Council Members: Longabaugh, Alton, Williams, Villanueva and Hall.

Nays: _____

Resolution #09-154
RFLS #1887

Loan Resolution 2010-001 – City of Surprise

Water Infrastructure Finance Authority of Arizona

Section 1: Resolution

WHEREAS, the Water Infrastructure Finance Authority of Arizona (the "*Authority*") has received from City of Surprise (the *"Local Borrower*) a request for a loan (the "*Loan*"); and

WHEREAS, the Authority has determined that the Local Borrower has met the requirements of Arizona Revised Statutes §49-1201 et seq. (the "*Act*") and the rules promulgated thereunder (the *"Rules"*); and

WHEREAS, the terms and conditions under which a Loan will be made and the obligations of the Local Borrower will be set forth in a loan agreement or bond purchase agreement (the "*Loan Agreement*") to be executed by the Local Borrower and the Authority.

NOW, THEREFORE BE IT RESOLVED BY THE BOARD OF DIRECTORS OF THE AUTHORITY AS FOLLOWS:

The Executive Director of the Authority is hereby authorized and directed to execute a Loan Agreement with the Local Borrower to evidence a Loan in accordance with the Act, the Rules, the Local Borrower's applications to the Authority, and the Project Summary detailed in Section 2 of this Loan Resolution.

The Executive Director and other Authority officials, as appropriate, are authorized and directed to sign any document and take such actions as necessary and appropriate to consummate the transactions contemplated by this Resolution and the Loan Agreement and to ensure that the Local Borrower has completed all requirements of the Authority as detailed in Section 3, Section 4, and Section 5 of this Loan Resolution.

This Resolution shall take effect immediately and shall terminate one year from the date of Board Action.

Dated: October 14, 2009

By: _____
Chairman

Attest: _____
Executive Director

Loan Resolution 2010-001 – City of Surprise

Water Infrastructure Finance Authority of Arizona

Section 2: Project Summary

2.1 Project Number(s)

CW 017-2010

2.2 Project Priority Data

ARRA PL Rank	Master PL Rank	Funding Cycle	Population Served	Type of ARRA Assistance	Subsidy Rate
26	24	2010	109,000	Reduced CIFR 2%	80%

2.3 Project Description(s)

To reuse reclaimed water, the City will modify the SPA-1 Reclaimed Booster Station to create a point of connection to the City of Surprise reclaimed water system at Litchfield Road and Waddell Road. The booster station is required in order to provide pressurized reclaimed water to water parks, ball fields, green belts and landscaping.

2.4 Previous Board or Committee Actions

1995 – WIFA Board approved Loan (#910011-96) to award $5,200,000 to the City of Surprise for CIP wastewater system improvements.

2.5 Project Finance Committee Recommendations

September 30, 2009 - Project Finance Committee reviewed the project due diligence summary and recommended approval by the Board.

Section 3: Financial Assistance Terms & Conditions (Section 7.1 of Due Diligence)

Financial Assistance Amount: $1,500,000

Primary Repayment Source: Revenues

Secondary Repayment Source: None

Loan Term: 20 years

Frequency of Repayment: Semi-Annual

Loan Structure: ARRA Governmental

Debt Service Reserve Fund Requirements: No Reserve

Repair and Replacement Fund Requirements: None

Requirements Prior to Loan Execution:

Require Legal Opinion: Yes

Other: No Requirement

Requirements Prior to Construction: No Requirement

Requirement During Construction: No Requirement

Requirements Prior to Final Disbursements: No Requirement

Loan Category: Qualified, Not Pledged

Policy Exceptions: None

Section 4: Technical Terms & Conditions (Section 7.2 of Due Diligence)

Observation Schedule: A

Withholding Percentage: 5%

Requirements Prior to Loan Execution: No Requirement

Requirements Prior to Construction:

Prior Review and Approval of Construction Bids: Yes

Require Construction Signs: Yes
The Local Borrower shall erect a construction sign displaying information on the Project and the funding sources. The Authority shall provide specifications for such construction signs. Sign must include the Recovery Act Logo.

Other: No Requirement

Requirements During Construction:

Prior Review of Changes in Project Scope: Yes
The Local Borrower shall submit to the Authority, for review and approval prior to execution, any change to the plans and specifications, construction contracts, Eligible Project Costs, or any other change which will effect the performance standards or purpose of the Project.

Other: No Requirement

Requirements Prior to Final Disbursements:

Require Plan of Operation: No Requirement

Require Final Approval: Yes

Other: No Requirement

Policy Exceptions: None

Section 5: Additional Notice & Reporting Requirements (Section 7.3 of Due Diligence)

WIFA to generate Press Release: Yes

Other: Yes – ARRA Reporting Requirements

Loan Agreement

Water Infrastructure Finance Authority of Arizona
(the "Authority")

and

City of Surprise
(the "Local Borrower")

Evidencing a Loan from the
Authority to the Local Borrower

Dated as of December 4, 2009

Table of Contents

Article 1 Description of the Loan

Section 1.1 Name and Address of Local Borrower 1
Section 1.2 Authorized Officer(s) of Local Borrower 1
Section 1.3 Notices 1
Section 1.4 Loan Information 2

Article 2 Description of the Project

Section 2.1 Description of Project 2
Section 2.2 Description of System 2

Article 3 Loan to Local Borrower; Amounts Payable

Section 3.1 The Loan 2
Section 3.2 Disbursement of Loan Proceeds 3
Section 3.3 Amounts Payable 3
Section 3.4 Tax Covenants 3

Exhibit A Financial Assistance Terms and Conditions; Borrower Payment Instructions; and Loan Repayment Schedule

Exhibit B Technical Assistance Terms and Conditions

Exhibit C Reporting Requirements

Exhibit D Source of Repayment

Exhibit E Debt Service Reserve Requirements

Exhibit F Replacement Reserve Requirements

Exhibit G Form of Opinion of Counsel to Borrower

Exhibit H Tax Compliance Certificate of Local Borrower

Loan Agreement

This Loan Agreement (this "*Loan Agreement*") is made and entered into as of 12/04/2009 by and between the Water Infrastructure Finance Authority of Arizona (the "*Authority*"), and City of Surprise (the "*Local Borrower*"), a political subdivision of the State of Arizona.

This Loan Agreement includes the attached Exhibits and the attached Standard Terms and Conditions. Any capitalized terms used and not defined herein shall have the meanings ascribed to such terms in the Exhibits and the Standard Terms and Conditions.

The Authority and the Local Borrower agree as follows:

Article 1 Description of the Loan

Section 1.1 Name and Address of Local Borrower.

City of Surprise
Attention: Mr. Richard Williams, Asst. Public Works Director
16000 N Civic Center Plaza
Surprise, Arizona 85374
Telephone: 623-222-7020
Fax: 623-222-7001

Section 1.2 Authorized Officer(s) of Local Borrower.

City of Surprise
Attention: Mr. Robert J. Beckley, Public Works Director
16000 N Civic Center Plaza
Surprise, Arizona 85374
Telephone: 623-222-6020
Fax: 623-222-6001

Section 1.3 Notices. All notices, certificates or other communications hereunder shall be sufficiently given and shall be deemed given when hand delivered or mailed by registered or certified mail, postage prepaid, to the Local Borrower at the address specified in Section 1.1 and to the Authority at the following address:

Executive Director
Water Infrastructure Finance Authority of Arizona
1110 West Washington Street, Suite 290
Phoenix, Arizona 85007
Telephone: (602) 364-1310
Fax: (602) 364-1327

Any of the parties may designate any further or different addresses to which subsequent notices, certificates or other communications shall be sent, by notice in writing given to the others.

Section 1.4 Loan Information. The terms of the Loan include the terms set forth in the Exhibits, which are part of this Loan Agreement:

Exhibit A Financial Assistance Terms and Conditions; Borrower Payment Instructions; and Loan Repayment Schedule

Exhibit B Technical Assistance Terms and Conditions

Exhibit C Reporting Requirements

Exhibit D Source of Repayment

Exhibit E Debt Service Reserve Requirements

Exhibit F Replacement Reserve Requirements

Exhibit G Form of Opinion of Counsel to Borrower

Exhibit H Tax Compliance Certificate of Local Borrower

Prior to Loan Closing, the Local Borrower must deliver to the Authority the Opinion of Local Borrower Counsel in the form of Exhibit G and the Tax Compliance Certificate of Local Borrower in the form of Exhibit H, signed and dated the date of Loan Closing.

Article 2 Description Of The Project

Section 2.1 Description of Project. The Project is described in Project Summary attached to the Loan Resolution of the Authority, and in Exhibit B of this Loan Agreement.

Section 2.2 Description of System. The term "System" means and includes all of the properties and facilities of the complete wastewater collection and treatment system of the Local Borrower, whether lying within or without the boundaries of the Local Borrower, as now existing and as they may hereafter be improved or extended while any Senior Lien Obligations (as such term is defined in the Resolution referred to in Exhibit D) or the Wastewater Fee Corporation Bonds (as such term is defined in the Resolution referred to in Exhibit D) remain outstanding, all improvements, additions and extensions thereto or replacements thereof hereafter constructed or acquired by purchase, contract or otherwise and all contracts, rights, agreements, leases and franchises of every nature owned by the Local Borrower and used or useful or held for use in the operation of said plant and system or any part or portion thereof.

Article 3 Loan to Local Borrower; Amounts Payable

Section 3.1 The Loan. The Authority shall loan and disburse to the Local Borrower in accordance with this Article 3 an amount listed in Exhibit A (the "Loan"), and the Local Borrower shall borrow and accept from the Authority, the Loan in the principal amount determined pursuant to this Article 3; provided, however, that (i) the Authority shall be under no

obligation to disburse any amount of the Loan if an Event of Default has occurred and is continuing under this Loan Agreement, and (ii) the amount to be disbursed shall be lawfully available for disbursement. The Local Borrower shall use the proceeds of the Loan strictly in accordance with the requirements of this Loan Agreement.

Section 3.2 Disbursements of Loan Proceeds. The Authority may disburse funds by check, by electronic means or by means of magnetic tape or other transfer medium. Except as hereinafter provided, disbursements shall be made only when (i) the request for disbursements is in substantially the form provided by the Authority and is accompanied by the necessary certifications and documentation and (ii) an Authorized Officer of the Authority has determined that such disbursement is proper. An Authorized Officer of the Authority shall approve disbursements directly to the persons or entities entitled to payment or to the Local Borrower in the case of reimbursement for costs of services already paid, and shall provide the Local Borrower with a copy of the approval and the date approved. Disbursements may be made only for Eligible Project Costs.

Section 3.3 Amounts Payable. The Local Borrower shall pay to the Authority the amounts shown in Exhibit A on or before the dates shown in Exhibit A, as the same may be adjusted as provided in the Standard Terms and Conditions, to reflect any revisions to the principal repayment schedule of the Loan. Such payments shall be made by electronic funds transfer or by direct debit to the Authority, in each case in accordance with payment instructions in Exhibit A.

Section 3.4 Tax Covenants.

(a) General. The Local Borrower acknowledges that, in connection with its state revolving fund programs, the Authority issues its bonds ("Authority Bonds") from time to time to finance loans and the Authority also pledges certain loans to secure and to serve as the source of payment for the Authority Bonds. As a result, and under the provisions of federal tax law applicable to the Authority Bonds, it is in the Authority's interest for the Loan to qualify and be an obligation that bears interest that is excludable from gross income for federal income tax purposes and is not an item of tax preference for purposes of the alternative minimum tax imposed on individuals and corporations under the Internal Revenue Code. Therefore, the Local Borrower represents and covenants as follows with respect to the Loan and the Authority Bonds. The Local Borrower covenants that it will not take any action, or fail to take any action, if any such action or failure to take such action would adversely affect the exclusion from gross income of the interest on the Loan or the Authority Bonds under Section 103(a) of the Internal Revenue Code or cause the interest on the Loan or the Authority Bonds to become an item of tax preference for purposes of the alternative minimum tax imposed on individuals and corporations under the Internal Revenue Code, and in the event of such action or omission, it will, promptly upon having such brought to its attention, take such reasonable actions based upon a bond counsel opinion as may rescind or otherwise negate such action or omission. The Local Borrower will not directly or indirectly use or permit the use of any proceeds of the Loan or any other funds of the Local Borrower or take or omit to take any action that would cause the Loan or the Authority Bonds to be or become "arbitrage bonds" within the meaning of Section 148(a) of the Internal Revenue Code or to fail to meet any other applicable requirement of Sections 103, 141, 148, 149 and 150 of the Internal Revenue Code or cause the interest on the Loan or the Authority Bonds to become an item of tax preference for purposes of the alternative

minimum tax imposed on individuals and corporations under the Internal Revenue Code. To that end, the Local Borrower will comply with all applicable requirements of Sections 103, 141, 148, 149 and 150 of the Code to the extent applicable to the Loan.

(b) Modification Based on Bond Counsel Opinion. Notwithstanding any provision of this Section, if the Local Borrower provides to the Authority a bond counsel opinion to the effect that any action required under this Section is no longer required, or to the effect that some further action is required, to maintain the exclusion from gross income of interest on the Loan or the Authority Bonds pursuant to Section 103(a) of the Internal Revenue Code, the provisions of this Section and the covenants in this Section shall be deemed to be modified to that extent.

(c) Bond Counsel Opinion. For purposes of this Section, "bond counsel opinion" means an opinion letter of a firm of attorneys of national reputation experienced in the field of municipal bonds whose opinions are generally accepted by purchasers of municipal bonds, and who is acceptable to the Authority.

IN WITNESS WHEREOF, the Authority and the Local Borrower have caused this Loan Agreement to be executed and delivered as of the date of execution hereof.

Water Infrastructure Finance Authority of Arizona

By: _____
Judy Navarrete, Executive Director

City of Surprise

By:_____
Mr. Robert J. Beckley, Public Works Director

Attest:

By: _____
Clerk

LOAN AGREEMENT ADDENDUM

American Recovery and Reinvestment Act of 2009 (Recovery Act)

Water Infrastructure Finance Authority of Arizona

This document (this "Recovery Act Addendum") sets forth additional requirements applicable to Loans made by the Water Infrastructure Finance Authority of Arizona ("WIFA") using funds derived in whole or in part from the United States Environmental Protection Agency pursuant to the federal American Recovery and Reinvestment Act of 2009, Public Law 111-5 (the "Recovery Act"). The provisions in this Recovery Act Addendum are a part of the Loan Agreement. Capitalized terms not otherwise defined herein shall have the meanings given them in the Loan Agreement.

Section 1. Recovery Act Requirements - Failure to Comply is Default Under Loan Agreement.

(a) General. The parties acknowledge and agree that funds disbursed by WIFA to the Local Borrower will include funds made available to WIFA by the federal government under the Recovery Act, and that the requirements of the Recovery Act include those set forth in this Recovery Act Addendum. The Local Borrower agrees to comply with all of those requirements and agrees that failure to do so is a breach of the provisions of the Loan Agreement which may result in a default under the Loan Agreement, termination of WIFA's obligation to make disbursements on the Loan and the Local Borrower being required to repay all amounts that have been disbursed by WIFA on the Loan (including any amount originally designated as the Forgivable Principal Portion), together with interest and fees as provided in the Loan Agreement (including interest and fees at rates adjusted from those originally in effect as described herein).

(b) Forgivable Principal Portion. Section 1 of Exhibit A to the Loan Agreement specifies the Total Financial Assistance Amount, the amount, if any, designated as the Forgivable Principal Portion, the Intended Repayment Amount, and the required amount of reserves to be established based upon the Intended Repayment Amount. Section 2 of Exhibit A to the Loan Agreement specifies a schedule of interest and principal payments based on the Intended Repayment Amount. If the Local Borrower fails to comply with the requirements of the Recovery Act, including those set forth in this Recovery Act Addendum:

(i) WIFA will provide a revised Exhibit A for the Loan Agreement to amortize the entire Total Financial Assistance Amount with the Forgivable Principal Portion set to $0.00, adjusted, as necessary, to incorporate, previous principal payments.

(ii) The Local Borrower will repay the Total Financial Assistance Amount.

(c) Subsidization of Interest and Fee Rate. Section 2 of Exhibit A to the Loan Agreement specifies the Combined Interest and Fee Rate ("CIFR") on the Loan, whether that CIFR is further subsidized based on Recovery Act funding, and a schedule of interest and principal payments that, if applicable, is based on the Recovery Act Subsidized CIFR. If the Local Borrower fails to comply with the requirements of the Recovery Act, including those set forth in this Recovery Act Addendum:

(i) WIFA will amortize the loan at a revised CIFR and not the Recovery Act Subsidized CIFR within a revised Exhibit A to the Loan Agreement.

(ii) WIFA will revise the CIFR so that the Local Borrower makes the remaining interest and principal payments as if the Loan had not originally included the Recovery Act Subsidized CIFR.

Section 2. Certifications by Local Borrower; Permission to Share Information.

(a) Statements as Certifications; Reliance. All statements made by the Local Borrower to WIFA in connection with the Loan constitute certifications upon which WIFA is entitled to rely in making and administering the Loan and in making any certifications required of WIFA or any other representative of the State of Arizona under the Recovery Act.

(b) Furtherance of Recovery Act Purposes. The Local Borrower certifies that the Loan and the Project to be financed by the Loan will further the stated purposes of the Recovery Act, including, without limitation, preserving and creating jobs, promoting economic recovery and providing infrastructure that will provide long-term economic benefits.

(c) Construction Start Date; Project Milestones. The Local Borrower agrees that if actual construction work does not begin on each separate project identified by a separate project number for purposes of WIFA's project priority list (whether or not two or more such projects with separate project numbers are combined in a single loan for funding purposes) by the start date for that project number as certified by the Local Borrower for purposes of receiving an award of Recovery Act funds, WIFA's obligation to make disbursements on the Loan will be terminated and the Local Borrower will be obligated to repay all amounts that have been disbursed by WIFA (including any amount designated as the Forgivable Principal Portion), together with interest and fees as provided in the Loan Agreement (with any adjustment in rates as described herein). The Local Borrower agrees that actual construction work must in any event start no later than February 17, 2010, as required by the Recovery Act, or else WIFA will have no obligation to make disbursements on the Loan.

(d) Green Project. The Local Borrower certifies and agrees that the portions of the Project identified by the Local Borrower to WIFA as addressing green infrastructure, water or energy efficiency improvements, or other environmental innovative activities will in fact address those requirements of the Recovery Act.

Section 3. Prohibited Uses of Loan Proceeds. No amounts disbursed as proceeds of the Loan may be used:

(a) for the purchase of land or easements; or

(b) for any casino or other gambling establishment, aquarium, zoo, golf course, or swimming pool; or

(c) to buy, refinance or restructure the debt obligations of the Local Borrower incurred prior to October 1, 2008.

Section 4. **Reports on Use of Funds.** The Local Borrower shall provide to WIFA reports and information regarding the Project that are reasonably required in order for WIFA to successfully meet the reporting requirements of the Recovery Act. The Local Borrower shall provide the information in the form and with the frequency specified by WIFA for that purpose.

Section 5. **Buy American.** In accordance with Section 1605 of the Recovery Act, all of the iron, steel and manufactured goods used in the Project must be produced in the United States, and the Local Borrower shall include this requirement and certifications in all bid specifications, construction contracts and purchase orders for the Project. The Recovery Act provides that this requirement shall not apply to the extent a waiver of this requirement is in effect pursuant to a finding by the Administrator of the United States Environmental Protection Agency published in the Federal Register in accordance with the Recovery Act to the effect that (1) applying the requirement would be inconsistent with the public interest; (2) iron, steel, and the relevant manufactured goods are not produced in the United States in sufficient and reasonably available quantities and of a satisfactory quality; or (3) inclusion of iron, steel, and manufactured goods produced in the United States will increase the cost of the overall project by more than 25 percent.

Section 6. **Wage Rate Requirements**. All laborers and mechanics employed by contractors and subcontractors on the Project shall be paid wages at rates not less than those prevailing on projects of a character similar in the locality as determined by the Secretary of Labor in accordance with subchapter IV of chapter 31 of title 40, United States Code. With respect to the labor standards specified in this section, the Secretary of Labor shall have the authority and functions set forth in Reorganization Plan Numbered 14 of 1950 (64 Stat. 1267; 5 U.S.C. App.) and section 3145 of title 40, United States Code. The Local Borrower shall include this requirement in all bid specifications, construction contracts and purchase orders for the Project.

Section 7. **General Provisions**.

(a) Binding Effect. This Recovery Act Addendum shall inure to the benefit of and shall be binding upon WIFA and the Local Borrower and their respective successors and assigns.

(b) Severability. In the event any provision of this Recovery Act Addendum shall be held illegal, invalid or unenforceable by any court of competent jurisdiction, such holding shall not invalidate, render unenforceable or otherwise affect any other provision hereof.

(c) Amendments, Supplements and Modifications. This Recovery Act Addendum may not be amended, supplemented or modified without the prior written consent of WIFA and the Local Borrower.

(d) Execution in Counterparts. This Recovery Act Addendum may be executed in several counterparts, each of which shall be an original and all of which shall constitute but one and the same instrument.

(e) Applicable Law. This Recovery Act Addendum shall be governed by and construed in accordance with the laws of the State of Arizona.

(f) Captions. The captions or headings in this Recovery Act Addendum are for convenience only and shall not in any way define, limit or describe the scope or intent of any provisions of this Recovery Act Addendum.

(g) Further Assurances. The Local Borrower shall, at the request of WIFA , authorize, execute, acknowledge and deliver such further resolutions, conveyances, transfers, assurances, financing statements and other instruments as may be necessary or desirable for better assuring, conveying, granting, assigning and confirming the rights and agreements granted or intended to be granted by this Recovery Act Addendum.

(h) Arbitration. The parties hereto agree to use arbitration to the extent required by Section 12 1518 of the Arizona Revised Statutes.

(i) Notice Regarding A.R.S. § 38 511. To the extent applicable by provision of law, the parties acknowledge that this Recovery Act Addendum is subject to cancellation pursuant to A.R.S. § 38-511, the provisions of which are hereby incorporated herein.

[SIGNATURE PAGE FOLLOWS]

WIFA and the Local Borrower are signing this Recovery Act Addendum to be effective as part of the Loan Agreement.

Water Infrastructure Finance Authority of Arizona

By: _____

Judy Navarrete, Executive Director

City of Surprise

By: _____

Mr. Robert J. Beckley, Public works Director

[Signature page to Recovery Act Addendum to Loan Agreement]

Exhibit A of Loan Agreement

Section 1: Financial Assistance Terms and Conditions
City of Surprise
15-Oct-09

Loan Number		91A137-10
Closing Date		11/20/09
First Payment Period		07/01/10
Financial Assistance Terms and Conditions		
Original Loan Amount as of the Closing Date	$	1,500,000.00
Loan Amount	$	1,500,000.00
Loan Term		20
ARRA Reduced Combined Interest & Fee Rate		2.000%
(Standard Combined Interest & Fee Rate)		4.000%
Total # of Payment Periods within Loan Term		40
Principal Repayments		
Period Principal Repayments Begin		2
First Principal Repayment Date		07/01/10
Final Principal Repayment Date		07/01/29
Combined Interest and Fee Payment Dates		
First Combined Interest and Fee Payment Date*		07/01/10
Final Combined Interest and Fee Payment Date		07/01/29

* *Actual initial Combined Interest and Fee payment calculated only on dollar amount drawn against loan as of initial payment date*

Debt Service Reserve Fund Requirements	
Total Reserve Amount	None
Annual Amount	None
Reserve Funded by (Date)	Not Applicable
Repair and Replacement Fund Requirement	
Begin Funding on (Date)	Not Applicable
Annual Amount	None
Semi-Annual Deposit	None

Annual Payment		
Years 1 through 5	$	91,735.08
Years 6 through 10	$	91,735.08
Years 11 through 15	$	91,735.08
Years 16 through 20	$	91,735.08

Section 2: Loan Repayment Schedule
City of Surprise
15-Oct-09

Year	Period	Semi-Annual Payment Dates	Combined Interest and Fee Rate	Semi-Annual Combined Interest and Fee Payment	Annual Principal Repayment	Total Annual Payment
1	1	01/01/10	2.000%	0.00		
1	2	07/01/10	2.000%	18,416.67	61,735.08	80,151.75
2	3	01/01/11	2.000%	14,382.65		
2	4	07/01/11	2.000%	14,382.65	62,969.78	91,735.08
3	5	01/01/12	2.000%	13,752.95		
3	6	07/01/12	2.000%	13,752.95	64,229.18	91,735.08
4	7	01/01/13	2.000%	13,110.65		
4	8	07/01/13	2.000%	13,110.65	65,513.78	91,735.08
5	9	01/01/14	2.000%	12,455.52		
5	10	07/01/14	2.000%	12,455.52	66,824.04	91,735.08
6	11	01/01/15	2.000%	11,787.28		
6	12	07/01/15	2.000%	11,787.28	68,160.52	91,735.08
7	13	01/01/16	2.000%	11,105.68		
7	14	07/01/16	2.000%	11,105.68	69,523.72	91,735.08
8	15	01/01/17	2.000%	10,410.44		
8	16	07/01/17	2.000%	10,410.44	70,914.20	91,735.08
9	17	01/01/18	2.000%	9,701.29		
9	18	07/01/18	2.000%	9,701.29	72,332.50	91,735.08
10	19	01/01/19	2.000%	8,977.97		
10	20	07/01/19	2.000%	8,977.97	73,779.14	91,735.08
11	21	01/01/20	2.000%	8,240.19		
11	22	07/01/20	2.000%	8,240.19	75,254.70	91,735.08
12	23	01/01/21	2.000%	7,487.64		
12	24	07/01/21	2.000%	7,487.64	76,759.80	91,735.08
13	25	01/01/22	2.000%	6,720.04		
13	26	07/01/22	2.000%	6,720.04	78,295.00	91,735.08
14	27	01/01/23	2.000%	5,937.08		
14	28	07/01/23	2.000%	5,937.08	79,860.92	91,735.08
15	29	01/01/24	2.000%	5,138.48		
15	30	07/01/24	2.000%	5,138.48	81,458.12	91,735.08
16	31	01/01/25	2.000%	4,323.89		
16	32	07/01/25	2.000%	4,323.89	83,087.30	91,735.08
17	33	01/01/26	2.000%	3,493.03		
17	34	07/01/26	2.000%	3,493.03	84,749.02	91,735.08
18	35	01/01/27	2.000%	2,645.53		
18	36	07/01/27	2.000%	2,645.53	86,444.02	91,735.08
19	37	01/01/28	2.000%	1,781.09		
19	38	07/01/28	2.000%	1,781.09	88,172.90	91,735.08
20	39	01/01/29	2.000%	899.36		
20	40	07/01/29	2.000%	899.36	89,936.28	91,735.00
				323,118.19	1,500,000.00	1,823,118.19

Exhibit B

Technical Terms and Conditions

Section 1
Budget

Uses by Budget Item	**Amount Budgeted**
Planning……..	$2,000.00
Design & Engineering…….	$86,844.00
Legal/Debt Authorization……	$0.00
Financial Advisor……	$0.00
Land/System Acquisition……	$0.00
Equipment/Materials……...	$0.00
Construction/Installation/Improvement……..	$1,194,288.00
Inspection & Construction Management…….	$103,000.00
Project Officer…….	$0.00
Administration…….	$0.00
Staff Training……..	$0.00
Capitalized Interest……..	$0.00
Refinance Loan……..	$0.00
Other……	$113,868.00
Total Budget……..	$1,500,000.00

Section 2
Project Description

To reuse reclaimed water, the City will modify the SPA-1 Reclaimed Booster Station to create a point of connection to the City of Surprise reclaimed water system at Litchfield Road and Waddell Road.

The Booster Station includes a vault, pumps, piping and plumbing, valves, sensors, instrumentation, ventilation, above ground equipment pads and enclosures, electrical, and controls.

The site work includes removal & replacement of pavement, sidewalks, curb & gutter; installation of a 20-foot driveway, 16” DIP reclaimed line, 16” gate valve, bacteriological sampling station, 4” DIP sewer force main, and landscaping.

Section 3
Estimated Observation and Disbursement Schedule

WIFA Withholding % (released after Final Observation) **5%**

Observation 1:	50	%	Loan Disbursal……	$	750,000.00
Final Observation:	95	%	Loan Disbursal……	$	1,425,000.00
WIFA Withholding……				$	75,000.00

Additional Observations – A WIFA representative may perform additional observations based on information provided in the projects status reports included in each Local Borrower disbursement requisition form.

Section 4
Requirements Prior To Construction

Section 4.1 **Construction Bids.** The Local Borrower shall submit to the Authority for review and approval prior to execution:

(a) engineering contracts related to the Project,

(b) bid documents related to the Project,

(c) construction contracts related to the Project, and

(d) certification of positive effort for disadvantaged business enterprise participation.

Section 4.2 **User Charges**. The Local Borrower has established (or, if the System is not yet in operation, the Local Borrower will, at or before the time the System commences operation, establish) a system of user charges which, with other funds lawfully available, will at all times be sufficient to pay the costs of operation and maintenance of the System, including renewals and replacements of the System. The Local Borrower also agrees that such system of user charges will be established and maintained in compliance with any applicable requirements of state and federal law as long as the Local Borrower owes amounts under this Loan Agreement. The Local Borrower at its sole option may pay the costs of operation, maintenance, repair, replacement, extensions and additions to the System from any funds lawfully available to it for such purpose.

Section 4.3 **Interest in Project Site**. As a condition of the Loan, the Local Borrower will demonstrate to the satisfaction of the Authority that the Local Borrower has or will have a fee simple or such other estate or interest in the site of the Project, including necessary easements and rights-of-way, as the Authority finds sufficient to assure undisturbed use and possession for the purpose of construction and operation of the Project for the estimated life of the Project.

Section 4.4 **Federal Clean Water Act**. The Local Borrower covenants that, to the extent legally applicable, the Project will meet the requirements of the Federal Clean Water Act in effect on the date of Loan Closing and any amendments thereto that may retroactively apply to the Loan, and the Local Borrower agrees that the Project will comply with applicable provisions of those federal laws and authorities listed in Article 9 of the Standard Terms and Conditions.

Section 4.5 **Federal Safe Drinking Water Act**. The Local Borrower covenants that, to the extent legally applicable, the Project will meet the requirements of the Federal Safe Drinking Water Act in effect on the date of Loan Closing and any amendments thereto that may retroactively apply to the Loan, and the Local Borrower agrees that the Project will comply with applicable provisions of those federal laws and authorities listed in Article 9 of the Standard Terms and Conditions.

Section 4.6 **Signs**. The Local Borrower shall erect a construction sign displaying information on the Project and the funding sources. The Authority shall provide specifications for such construction signs. Signs must include the Recovery Act Logo.

Section 5
Requirements During Construction

Section 5.1 **Changes in Project Scope.** The Local Borrower shall submit to the Authority, for review and approval prior to execution, any change to the plans and specifications, construction contracts, Eligible Project Costs, or any other change which will effect the performance standards or purpose of the Project.

Section 5.2 **Completion of Project and Provision of Moneys Therefor**. The Local Borrower covenants and agrees (a) to exercise its best efforts in accordance with prudent utility construction practice to complete the Project and (b) to the extent permitted by law, to provide from its own fiscal resources all moneys, in excess of the total amount of loan proceeds it receives hereunder and under any subsequent loan from the Authority, required to complete the Project.

Section 5.3 **Inspections; Information**. The Local Borrower shall permit the Authority and any party designated by the Authority to examine, visit and inspect, at any and all reasonable times, the property, if any, constituting the Project, and to inspect and make copies of any accounts, books and records, including (without limitation) its records regarding receipts, disbursements, contracts, investments and any other matters relating thereto and to its financial standing, and shall supply such reports and information as the Authority may reasonably require in connection therewith.

Section 5.4 **Adjustments for Ineligible Costs**. The Local Borrower shall promptly reimburse the Authority for any portion of the Loan which is determined to have been used for costs that are not eligible for funding under the Authority Act, the Federal Clean Water Act, as amended, or the Federal Safe Drinking Water Act, as amended, unless such matter is curable in some other manner by the Local Borrower to the satisfaction of the Authority. Such reimbursement shall be

promptly repaid to the Authority upon written request of the Authority. Any such reimbursed principal amount will be applied to reduce the outstanding principal amount of the Loan.

Section 5.5 **Archaeological Artifacts**. In the event that archaeological artifacts or historical resources are discovered during construction excavation of the Project, the Local Borrower shall stop or cause to be stopped construction activities and will notify the State Historic Preservation Office and the Authority of such discovery.

Section 6
Requirements Prior To Final Disbursements

Section 6.1 **Plan of Operation**. No Requirement.

Section 6.2 **Final Approval**. Prior to the release of the withholding, the Local Borrower will submit to the Authority (a) as-built drawings by a professional engineer that document all changes from the original plans and specifications (b) copies of all testing results performed by or under the supervision of a professional engineer as required by the specifications, and (c) Arizona Department of Environmental Quality (ADEQ) approval of construction or an engineer's Certificate of Completion certifying that all construction was completed in accordance with the plans and specifications or that any changes made are in conformance with the Arizona Revised Statutes, ADEQ and Environmental Protection Agency rules, permits and guidelines and are documented in the as-built drawings. Based on a review of the information submitted, the Authority reserves the right, prior to the release of the withholding, to request modifications to the Project, the system, or the materials submitted pursuant to this section.

Exhibit C

Reporting Requirements

Annual Loan Review. The Authority's Annual Loan Review Form and annual financial statements in a format approved by the Authority, including the report of any annual audit(s) and all audit reports required by governmental auditing standards and any applicable Arizona rules, shall be provided by the Local Borrower to the Authority within one-hundred and eighty (180) days after the end of each fiscal year of the Local Borrower. The Local Borrower shall complete all audits and submit all reports required by the federal Single Audit Act within the time limits under that federal law, currently within the earlier of 30 days after receipt of the auditor's reports or nine months after the end of the audit period, unless a longer period is agreed to in advance by the federal agency that provided the funding or a different period is specified in a program-specific audit guide.

Section 1. **Records and Accounts**. The Local Borrower shall keep accurate records and accounts for the System, including the Project (the "*System Records*"), separate and distinct from its other records and accounts (the "*General Records*"). To the extent required by law, such System Records shall be maintained in accordance with generally accepted government or other applicable accounting standards and shall be audited annually, if required by law, by an independent accountant, which audit may be part of the annual audit of the General Records of the Local Borrower. Such System Records and General Records shall be made available for inspection by the Authority at any reasonable time.

Section 2. **Notice of Change In Key Personnel**. Promptly after becoming aware thereof, the Local Borrower shall provide notice in writing to the Authority of any change to the information in Section 1 of the Loan Agreement and any other change in key personnel connected to the Project and Loan.

Section 3. **Notice of Material Adverse Change**. The Local Borrower shall promptly notify the Authority of any material adverse change in the activities, prospects or condition (financial or otherwise), of the Local Borrower relating to the System, or in the ability of the Local Borrower to make all Loan Repayments from the Source of Repayment described in this Loan Agreement and otherwise to observe and perform its duties, covenants, obligations and agreements hereunder.

Section 4. **Disadvantaged Business Enterprise (DBE) Program.** The Local Borrower must report DBE participation to the Authority based on guidance from the Authority.

Section 6. **Notice of Default**. Promptly after becoming aware thereof, Local Borrower shall give notice to the Authority of (i) the occurrence of any Event of Default under the Loan Agreement or (ii) the occurrence of any breach, default, Event of Default, or event which with the giving of notice or lapse of time, or both, could become a material breach, default, or Event of Default (a "Future Breach") under any agreement, indenture, mortgage, or other instrument (other than the Loan Agreement) to which the Local Borrower is a party or by which it or any of its property is bound or affected. Local Borrower shall provide written notice to the Authority if the effect of such breach, default, Event of Default or Future Breach is to accelerate, or to permit

the acceleration of, the maturity of any indebtedness under such agreement, indenture, mortgage, or other instrument; provided, however, that the failure of the Local Borrower to give such notice shall not affect the right and power of the Authority to exercise any and all of the remedies specified herein.

Section 7**.** **Notice of Non-Environmental Litigation**. Promptly after the commencement or overt threat thereof, Local Borrower shall provide the Authority with written notice of the commencement of all actions, suits, or proceedings before any court, arbitrator, or governmental department, commission, board, bureau, agency, or instrumentality affecting Local Borrower which, if adversely determined, could have a material adverse effect on the condition (financial or otherwise), operations, properties, or business of Local Borrower, or on the ability of Local Borrower to perform its obligations under the Loan Agreement.

Section 8. **Notice of Environmental Litigation**. Without limiting the provisions of Section 7 above, promptly after receipt thereof, Local Borrower shall provide the Authority with written notice of the receipt of all pleadings, orders, complaints, indictments, or other communication alleging a condition that may require Local Borrower to undertake or to contribute to a cleanup or other response under laws relating to environmental protection, or which seek penalties, damages, injunctive relief, or criminal sanctions related to alleged violations of such laws, or which claim personal injury to any person or property damage as a result of environmental factors or conditions or which, if adversely determined, could have a material adverse effect on the condition (financial or otherwise), operations, properties, or business of Local Borrower, or on the ability of Local Borrower to perform its obligations under the Loan Agreement.

Section 9. **Regulatory and Other Notices**. Promptly after receipt or submission thereof, Local Borrower shall provide the Authority with copies of any notices or other communications received from or directed to any governmental authority with respect to any matter or proceeding which could have a material adverse effect on the condition (financial or otherwise), operations, properties, or business of Local Borrower, or the ability of Local Borrower to perform its obligations under the Loan Agreement, or which reveals a substantial non compliance with any applicable law, regulation or rule.

Section 10. **Other Information**. The Local Borrower shall submit to the Authority other information regarding the condition (financial or otherwise), or operation of the Local Borrower as the Authority may, from time to time, reasonably request.

Section 11. **Additional Reporting Requirements.** The Local borrower shall refer to the Recovery Act Loan Agreement Addendum for additional reporting requirements.

Exhibit D Source of Repayment: System Revenues

This Loan Agreement shall be the "First Senior Lien Obligation" referred to in Resolution No. 07-45 (attached) adopted by the Mayor and Council of the Local Borrower on April 17, 2007. Defined terms used herein shall have the same meanings as provided in such Resolution except that the term "Parity Obligations" where used herein shall have the same meaning as given to "Senior Lien Obligations" in such Resolution and the term "Source of Repayment" where used herein shall have the same meaning as given to "System Net Revenues" in such Resolution. The Authority shall be the Senior Lien Obligations Owner of the First Senior Lien Obligation for all purposes of such Resolution.

RESOLUTION NO. 07-45

RESOLUTION OF THE MAYOR AND COUNCIL OF THE CITY OF SURPRISE, ARIZONA, AUTHORIZING THE EXECUTION AND DELIVERY OF A FIRST UTILITY SYSTEM GROUND LEASE, A FIRST UTILITY SYSTEM CITY LEASE, A BOND PURCHASE CONTRACT AND A FIRST UTILITY SYSTEM CONTINUING DISCLOSURE AGREEMENT; PROVIDING FOR THE COLLECTION AND DISPOSITION OF THE REVENUES TO BE DERIVED FROM THE WASTEWATER SYSTEM AND FROM WASTEWATER DEVELOPMENT IMPACT FEES OF THE CITY; MAKING OTHER PROVISIONS WITH RESPECT TO THE OPERATION OF SAID WASTEWATER SYSTEM; APPROVING THE EXECUTION AND DELIVERY BY CITY OF SURPRISE MUNICIPAL PROPERTY CORPORATION OF CERTAIN OF SUCH DOCUMENTS AS WELL AS A FIRST UTILITY TRUST INDENTURE; APPROVING AN OFFICIAL STATEMENT; APPROVING THE ISSUANCE OF NOT TO EXCEED $55,000,000 AGGREGATE PRINCIPAL AMOUNT OF CITY OF SURPRISE MUNICIPAL PROPERTY CORPORATION WASTEWATER DEVELOPMENT IMPACT FEE AND SUBORDINATE LIEN WASTEWATER UTILITY REVENUE BONDS, SERIES 2007; DELEGATING TO THE FINANCE DIRECTOR OF THE CITY THE AUTHORITY TO DETERMINE VARIOUS TERMS WITH RESPECT TO THE BONDS AND THE SALE THEREOF; AUTHORIZING THE TAKING OF ALL OTHER ACTIONS NECESSARY TO THE CONSUMMATION OF THE TRANSACTIONS CONTEMPLATED BY THIS RESOLUTION AND DECLARING AN EMERGENCY

WHEREAS, City of Surprise Municipal Property Corporation, a nonprofit corporation incorporated and existing pursuant to the laws of the State of Arizona (the "Corporation"), was formed to transact any or all lawful business for which nonprofit corporations may be incorporated under the laws of the State of Arizona (the "State"), including, without limiting the generality of the foregoing, any civic or charitable purpose such as financing or refinancing the cost of acquiring, constructing, reconstructing or improving buildings, equipment or other real and personal properties suitable for use by and for leasing to the City of Surprise, Arizona, a municipal corporation duly incorporated and validly existing pursuant to the laws of the State of Arizona (the "City"), or its agencies or instrumentalities; and

WHEREAS, the Mayor and Council of the City (the "Council") finds and determines that it will be beneficial to the citizens of the City to finance immediately the costs of additional capacity for the wastewater treatment portion of the wastewater system of the City (collectively, the "Project") and that the financing of the Project

and the issuance of certain City of Surprise Municipal Property Corporation Wastewater Development Impact Fee and Subordinate Lien Wastewater Utility Revenue Bonds, Series 2007 (the "Wastewater Fee Corporation Bonds") pursuant to the terms of the hereinafter described First Utility System City Lease and the hereinafter described First Utility System Indenture is in furtherance of the purposes of the City and in the public interest thereof; and

WHEREAS, by this Resolution, the Council also will provide for the ability in the future to issue a series of bonds or other obligations of the City (the "First Senior Lien Obligations"), having a lien upon and being payable from the hereinafter defined System Net Revenues on a senior basis from the lien on a portion of the System Net Revenues for the Wastewater Fee Corporation Bonds to finance the costs of other needs for the wastewater system of the City; and

WHEREAS, the Board of Directors of the Corporation have determined to assist the City in financing the costs of the Project; and

WHEREAS, in connection with the issuance of the Wastewater Fee Corporation Bonds, the Corporation and the City shall enter into (i) a First Utility System Ground Lease, to be dated as of the first day of the month of the date established as the dated date of the Wastewater Fee Corporation Bonds as provided herein (the "First Utility System Ground Lease"), pursuant to which the City will lease certain real property (which includes certain existing treatment and related facilities thereon) described on Exhibit A attached thereto (the "Real Property") to the Corporation, and (ii) a First Utility System City Lease, to be dated as of the first day of the month of the date established as the dated date of the Wastewater Fee Corporation Bonds as provided herein (the "First Utility System City Lease"), pursuant to which the City shall lease from the Corporation the Real Property and, as agent for the Corporation, shall agree to cause the Project to be provided; and

WHEREAS, the Wastewater Fee Corporation Bonds shall be secured by a First Utility System Trust Indenture, to be dated as of the first day of the month of the date established as the dated date of the Wastewater Fee Corporation Bonds as provided herein (the "First Utility System Indenture"), from the Corporation to Wells Fargo Bank, N.A., as trustee (the "Trustee"); and

WHEREAS, other than agreements already in place with respect to developments known as "Cortessa - Citrus," "Sarah Ann Ranch," "Sierra Montana" and "Surprise Farms," there are no agreements to which the City is a party pursuant to which the City has, directly or indirectly, obligated, including by agreeing to provide waivers, reimbursements, credits, rebates or other similar relief with respect to, the Wastewater Development Impact Fee (as such term is hereinafter defined); and

WHEREAS, the Corporation has represented and warranted that it has not made and does not intend to make any profit by reason of any business or venture in which it may engage or by reason of the assistance it renders the City in financing the Project, and no part of the net earnings of the Corporation, if any, shall ever inure to the benefit of any person, firm or corporation except the City; and

WHEREAS, there have been placed on file with the Clerk of the City and presented at the meeting at which this Resolution was adopted (1) the proposed form of the First Utility System Indenture, (2) the proposed form of the First Utility System Ground Lease, (3) the proposed form of the First Utility System City Lease, (4) the proposed form of the Purchase Contract, to be dated the date of sale of the Wastewater Fee Corporation Bonds (the "Purchase Contract"), by and among the Corporation, the City and Peacock, Hislop, Staley & Given, Inc. (the "Purchaser") for the purchase of the Wastewater Fee Corporation Bonds, (5) the proposed form of the First Utility System Continuing Disclosure Agreement, to be dated even date with the initial delivery of the Wastewater Fee Corporation Bonds (the "First Utility System Undertaking"), from the City and (6) the proposed form of the Preliminary Official Statement, to be dated the date of mailing thereof (the "Preliminary Official Statement"), relating to the Wastewater Fee Corporation Bonds, which, as to be revised after the sale of the Wastewater Fee Corporation Bonds, shall constitute the form of Official Statement (the "Official Statement") relating to the Bonds; and

WHEREAS, all acts, conditions and things required by the Constitution and the laws of the State of Arizona and the requirements of the City to happen, exist and be performed precedent to and in the adoption of this Resolution have happened, exist and have been performed as so required in order to make this Resolution a valid and binding instrument for the security of the First Utility System City Lease, including the establishment of the Wastewater Development Impact Fee, have been duly done and performed in the manner required by law;

NOW, THEREFORE, BE IT RESOLVED BY THE MAYOR AND COUNCIL OF THE CITY OF SURPRISE, ARIZONA, THAT:

Section 1. Definitions. In addition to the other terms defined in this Resolution, the following terms shall have the following meanings in this Resolution unless the text expressly or by necessary implication requires otherwise:

"Actual Unpaid Wastewater Fee Corporation Bonds Debt Service" shall mean, at the date of any calculation thereof, the cumulative total dollar amount of all of the debt service which remains unpaid with respect to the Wastewater Fee Corporation Bonds, using the actual principal amounts of the Defeasances for each of the Defeasance Dates to the time of such calculation and the Scheduled Defeasance Amounts for each of the remainder of the Defeasance Dates and, if a Defeasance Shortfall has occurred, adding the difference

between the applicable Scheduled Defeasance Amount for each such Defeasance Date and the corresponding actual principal amount of the Defeasance for each such Defeasance Date to the amount due on the next succeeding maturity date of the Wastewater Fee Corporation Bonds.

"Additional Parity Senior Lien Obligations" shall mean any additional parity lien bonds or other obligations which may hereafter be, or caused to be, issued by the City and once issued having a lien upon and being payable from System Net Revenues on a parity with the First Senior Lien Obligations pursuant to the restrictive provisions of Section 6(H) of this Resolution.

"Administrative Expenses" shall mean that dollar amount of the reasonable expenses of all services rendered by the City and its various departments through the last day of the calendar month preceding any calculation thereof with respect to the System.

"Business Day" shall mean any day other than a Saturday, Sunday or a day on which banks located in the State are authorized or required by law to close.

"Code" shall mean the Internal Revenue Code of 1986, as amended, and any successor provisions thereto.

"Computed Portion" shall mean, as of the date of any transfer pursuant to the first sentence of Section 6(D)(6)(I) of this Resolution, moneys which are the portion of the revenues from collection of the Wastewater Development Impact Fee on deposit in the Wastewater Development Impact Fee Fund through the last day of the calendar month immediately preceding any such transfer which is the total cumulative dollar amount of each Wastewater Equivalent Residential Unit for which the Wastewater Development Impact Fee had been collected. Such moneys shall not include any investment income inuring to amounts while on deposit in the Subordinate Lien Obligations Fund.

"Current Wastewater Fee Corporation Bonds Debt Service" shall mean, as of the date being considered, those payments then required to be made by the City pursuant to Subsections 1.03(A)(i) and (ii) of the First Utility System City Lease (provided that for such purpose any portions of such rental payments which are for other than principal for the Wastewater Fee Corporation Bonds shall be treated as interest for this purpose but that any amounts due as "rebate" pursuant to Section 148 of the Code shall be paid first, immediately and in total from amounts available for such rental payments).

"Defeasance Date" shall mean each of the Defeasance Dates indicated in the schedule included in Subsection 7.03(B)(ii)(a) of the First Utility System City Lease.

"Defeasance Fund" shall mean the "Defeasance Fund" established by the First Utility System Indenture.

"Defeasance Shortfall" shall mean an event in which the Scheduled Defeasance Amount for any Defeasance Date is not accumulated or exceeded.

"Defeasance" shall mean each of the mandatory defeasances of the Wastewater Fee Corporation Bonds required by Subsection 7.03(B)(ii) of the First Utility System City Lease.

"Depository" shall mean (i) a commercial bank doing business in the State which has an office in the City and whose deposits are insured by the Federal Depository Insurance Corporation or (ii) the Treasurer of the State.

"Fiscal Year" shall mean the twelve month period beginning on July 1 of each year and ending on the last day of June of the next succeeding year.

"Operation and Maintenance Expenses" shall mean that dollar amount of Administrative Expenses and all expenses reasonably incurred through the last day of the calendar month immediately preceding any calculation thereof in connection with the operation, use and maintenance of the System, including repairs necessary to keep the System in efficient and economical operating condition, the payments of premiums for insurance hereinafter required to be carried on the System and generally all expenses of the System except depreciation and interest expense on the Senior Lien Obligations and the Wastewater Fee Corporation Bonds, and obligations subordinate to the Wastewater Fee Corporation Bonds.

"Operation and Maintenance Fund" has the meaning provided in Section 6(D)(1) of this Resolution.

"Repair and Replacement Fund" has the meaning provided in Section 6(D)(5) of this Resolution.

"Reserve Requirement For Senior Lien Obligations" shall mean the lesser of (i) an amount equal to ten percent (10%) of the net proceeds of the Senior Lien Obligations, (ii) the maximum principal (whether at maturity, by mandatory redemption or otherwise) and interest coming or which pursuant to the terms thereof could become due on the Senior Lien Obligations in any Fiscal Year, or (iii) one hundred twenty-five percent (125%) of the average annual principal and interest coming or which pursuant to the terms thereof could become due on the Senior Lien Obligations in any Fiscal Year. The Reserve Requirement For Senior Lien Obligations may be satisfied by the City by depositing a specified amount in the Senior Lien Obligations Reserve Fund by the deposit of a surety bond, insurance policy or letter of credit (each a "Senior Lien Obligations Reserve Fund Credit Instrument") as set forth in the separate resolution providing for issuance of the Senior Lien Obligations.

"Revenue Fund" has the meaning provided in Section 6(D) of this Resolution.

"Revenues" shall mean and include that dollar amount of all income, moneys and receipts to be received by the City (except from the Wastewater Development Impact Fee), through the last day of the calendar month immediately preceding any calculation thereof directly or indirectly, from the ownership, use or operation of the System, including any waste material or by-products of the System and also including investment income allocable thereto.

"Scheduled Defeasance Amount" shall mean, for each of the Defeasance Dates, the Scheduled Defeasance Amount indicated in the schedule included in Subsection 7.03(B)(ii)(a) of the First Utility System City Lease for such of the Defeasance Dates.

"Scheduled Unpaid Wastewater Fee Corporation Bonds Debt Service" shall mean, at the date of any calculation thereof, the cumulative total dollar amount of all the debt service which would remain to be paid with respect to the Wastewater Fee Corporation Bonds, using the Scheduled Defeasance Amounts for each of the Defeasance Dates less the amount then held in the Wastewater Fee Corporation Bonds Reserve Fund and less the total of the amounts of Computed Portion available to be applied to effect the Defeasances pursuant to Subsection 7.03(B)(ii)(c) of the First Utility System City Lease.

"Senior Lien Obligations" shall mean the First Senior Lien Obligations and Additional Parity Senior Lien Obligations as defined in, and issued in accordance with the restrictive terms and conditions of, this Resolution.

"Senior Lien Obligations Bond Fund" has the meaning provided in Section 6(D)(2) of this Resolution.

"Senior Lien Obligations Debt Service" shall mean that dollar amount applied through the last day of the calendar month immediately preceding any calculation of Subordinate Net Revenues pursuant to Section 6(D)(2) of this Resolution with respect to those payments required to be made by the City which will be applied to the payment of the principal of and interest on the Senior Lien Obligations, including under the provisions of any agreement relating thereto.

"Senior Lien Obligations Owner" shall mean any person who shall be the registered owner of any Senior Lien Obligations outstanding.

"Senior Lien Obligations Policy Costs" shall mean the amount necessary to pay or reimburse an issuer of a Senior Lien Obligations Reserve Fund Credit Instrument for any draws or claims made or paid pursuant to such Senior Lien Obligations Reserve Fund Credit Instrument, plus the related reasonable expenses incurred by such issuer of a Senior Lien Obligations Reserve Fund Credit Instrument and the interest on any such draw or claim paid by such issuer at the agreed upon interest rate set forth in the agreement with respect to the Senior Lien Obligations Reserve Fund Credit Instrument.

"Senior Lien Obligations Reimbursement Fund" has the meaning provided in Section 6(D)(4) of this Resolution.

"Senior Lien Obligations Reimbursement Fund Requirement" shall mean that dollar amount applied through the last day of the calendar month immediately preceding any calculation of Subordinate Net Revenues pursuant to Section 6(D)(4) of this Resolution with respect to the Senior Lien Obligations.

"Senior Lien Obligations Repair and Replacement Fund Requirement" shall mean that dollar amount applied through the last day of the calendar month immediately preceding any calculation of Subordinate Net Revenues pursuant to Section 6(D)(5) of this Resolution with respect to the Senior Lien Obligations.

"Senior Lien Obligations Reserve Fund" has the meaning provided in Section 6(D)(3) of this Resolution.

"Senior Lien Obligations Reserve Fund Credit Instrument" has the meaning provided in the definition of Reserve Requirement For Senior Lien Obligations.

"Senior Lien Obligations Reserve Fund Requirement" shall mean that dollar amount applied through the last day of the calendar month immediately preceding any calculation of Subordinate Net Revenues pursuant to Section 6(D)(3) of this Resolution with respect to the Senior Lien Obligations.

"Subordinate Lien Obligations Fund" has the meaning provided in Section 6(D)(6)(I) of this Resolution, money in which shall be used solely, and is expressly and exclusively pledged pursuant to Section 5(B) of this Resolution for the purpose of, paying the Current Wastewater Fee Corporation Bonds Debt Service (including only from the remaining dollar amounts of the Computed Portion for the Defeasances) on the Wastewater Fee Corporation Bonds. (The Subordinate Lien Obligations Fund shall not be subject to any pledge in favor of the Senior Lien Obligations.)

"Subordinate Net Revenues" shall mean, as calculated as of the tenth (10th) day of each month, that dollar amount determined by deducting from the Revenues the amounts of the Operation and Maintenance Expenses, the Senior Lien Obligations Debt Service, the Senior Lien Obligations Reserve Fund Requirement, the Senior Lien Obligations Reimbursement Fund Requirement and the Senior Lien Obligations Repair and Replacement Fund Requirement.

"System Net Revenues" shall mean that portion of the Revenues remaining after providing sufficient funds for the Operation and Maintenance Expenses of the System pursuant to Section 6(D)(1) of this Resolution.

"System" shall mean and include all of the properties and facilities of the complete wastewater collection and treatment system

of the City, whether lying within or without the boundaries of the City, as now existing and as they may hereafter be improved or extended while any Senior Lien Obligations or the Wastewater Fee Corporation Bonds remain outstanding, all improvements, additions and extensions thereto or replacements thereof hereafter constructed or acquired by purchase, contract or otherwise and all contracts, rights, agreements, leases and franchises of every nature owned by the City and used or useful or held for use in the operation of said plant and system or any part or portion thereof.

"Wastewater Development Impact Fee Fund" shall mean that separate fund of the City to which the revenues from collection of the Wastewater Development Impact Fee are deposited upon receipt pursuant to Section 9-463.05, Arizona Revised Statutes, as amended.

"Wastewater Development Impact Fee" shall mean the fee collected by the City from time to time per Wastewater Equivalent Residential Unit and currently referred to in the books and records (i.e., the written reports prepared for purposes of Sections 9-463.05(C) and 9-511.01(A), Arizona Revised Statutes, as amended) of the City as the Wastewater Development Impact Fee for the privilege of connecting any residence or other building or improvement to an interceptor, force main, lateral or other wastewater collection device which is connected or otherwise provides flows to the South Wastewater Treatment Plant of the City. Such term shall be deemed to refer to such fee collected by whatever name such fee may in the future be referred (e.g., a "connection fee", a "hook-up fee" or a "tap fee") or whenever imposed if the fee is imposed for the purpose of offsetting the costs of the burden imposed on the City to provide wastewater treatment capacity from or as a charge for connecting to the South Wastewater Treatment Plant of the City. The meaning of this term shall conform to the actual practices of the City adopted from time to time so long as the same are uniformly applied. It is not intended that this term include any other amount collected by the City now or hereafter to defer other appropriate costs, including, without limitation, costs of operating and maintaining the System.

"Wastewater Equivalent Residential Unit" shall mean the basic unit of wastewater treatment service with respect to which the Wastewater Development Impact Fee is collectable.

"Wastewater Fee Corporation Bonds Reserve Fund" shall mean the "Wastewater Fee Corporation Bonds Reserve Fund" established by the First Utility System Indenture.

Section 2. Approval of Forms, Terms and Provisions of Documents.

(A) The forms, terms, and provisions of the First Utility System Ground Lease, the First Utility System City Lease, the First Utility System Undertaking, and the Purchase Contract, in substantially the forms of such documents (including the exhibits thereto) presented at the meeting at which this Resolution was adopted, are

hereby approved, with such insertions, omissions, and changes as shall be approved by the Mayor or, in the absence thereof, Vice Mayor of the City, the execution of such documents being conclusive evidence of such approval, and the Mayor or, in the absence thereof, Vice Mayor and the Clerk of the City are hereby authorized and directed, for and on behalf of the City, to sign or attest and deliver the First Utility System Ground Lease, the First Utility System City Lease, the First Utility System Undertaking and the Purchase Contract and all other documents necessary in connection with the foregoing.

(B) The form, terms and provisions of the First Utility System Indenture, in substantially the form of such document (including exhibits thereto) presented at the meeting at which this Resolution was adopted, is also hereby approved, with such insertions, omissions, and changes as shall be approved by the President or, in the absence thereof, Vice President and the Secretary-Treasurer of the Corporation, the execution of the First Utility System Indenture being conclusive evidence of such approval with respect to the First Utility System Indenture, and the President or, in the absence thereof, Vice President and the Secretary-Treasurer of the Corporation are hereby directed to sign or attest and deliver the First Utility System Ground Lease, the First Utility System City Lease, the First Utility System Indenture and the Purchase Contract and all other documents necessary in connection with the foregoing including to provide for the issuance of the Wastewater Fee Corporation Bonds.

(C) (1) The form of the Preliminary Official Statement, in substantially the form of such document (including appendices thereto) presented at the meeting at which this Resolution was adopted, is also hereby approved, and the use thereof and of the Official Statement in connection with the sale of the Wastewater Fee Corporation Bonds is hereby approved. The President or, in the absence thereof, Vice President of the Corporation is hereby authorized and directed, for and on behalf of the Corporation, to cause the preparation of and to execute and deliver the Official Statement.

(2) (a) The City shall comply with and carry out all the provisions of the First Utility System Undertaking.

(b) This Subsection shall constitute a contract between the City and certain owners of the Wastewater Fee Corporation Bonds as described in the First Utility System Undertaking.

(c) In the event of a failure of the City to comply with the provisions of this Subsection, such owners of the Wastewater Fee Corporation Bonds may take such actions as may be necessary and appropriate, including seeking mandamus or specific performance by court order, to cause the City to comply with its obligations under this Subsection. A default under this Subsection shall not be deemed an event of default for other purposes of this Resolution or the First Utility System City Lease, and the sole remedy under

this Subsection in the event of any failure of the City to comply with this Subsection shall be an action to compel performance.

Section 3. Approval of Wastewater Fee Corporation Bonds.

(A) The City hereby specifically approves the issuance and delivery of the Wastewater Fee Corporation Bonds, as hereinafter described, by the Corporation. The Wastewater Fee Corporation Bonds shall be designated "City of Surprise Municipal Property Corporation Wastewater Development Impact Fee and Subordinate Lien Wastewater Utility Revenue Bonds, Series 2007," shall be issued in an aggregate principal amount of not to exceed $55,000,000, shall be in the denomination of $5,000 of principal amount, or any integral multiple thereof, and shall be fully registered bonds without coupons, as provided in the Indenture.

(B) The Finance Director of the City is hereby authorized to determine on behalf of the City and the Corporation the date the Wastewater Fee Corporation Bonds are to be sold to the Purchaser; the total aggregate principal amount of the Wastewater Fee Corporation Bonds which are to be issued but not to exceed the principal amount indicated hereinabove; the date the Wastewater Fee Corporation Bonds are to be dated; the dates on which interest on the Wastewater Fee Corporation Bonds is to be payable; the rates per annum the Wastewater Fee Corporation Bonds are to bear; the dates the Wastewater Fee Corporation Bonds are to mature but not later than April 1, 2032, the principal amounts to mature on such dates, the provisions for redemption of the Wastewater Fee Corporation Bonds in advance of such dates and the hereinafter described "Scheduled Defeasance Amounts" and "Defeasance Dates"; the terms upon which the Wastewater Fee Corporation Bonds are to be sold to the Purchaser (including determinations of price, original issue discount and premium and underwriting compensation and the provisions for credit enhancement, if any, for the Wastewater Fee Corporation Bonds upon the advice of the Purchaser; provided, however, that the foregoing determinations shall not result in the yield on the Wastewater Fee Corporation Bonds, calculated for federal income tax purposes, exceeding six percent (6%).

(C) The form, terms and provisions of the Wastewater Fee Corporation Bonds, and the provisions for the signatures, authentication, payment, registration, transfer, exchange, redemption and number with respect thereto, shall be as set forth in the First Utility System Indenture and are hereby approved.

Section 4. Requests of Corporation.

(A) The City hereby requests the Corporation to sell the Wastewater Fee Corporation Bonds to the Purchaser in accordance with the terms of the Purchase Contract and at the price specified therein, as submitted to the Corporation by the Purchaser.

(B) The City further hereby requests the Corporation to take any and all action necessary in connection with the acquisition and construction of the improvements relating to the Project as hereinabove described and the sale, issuance and delivery of the Wastewater Fee Corporation Bonds, including the execution and delivery of the Purchase Contract, the First Utility System Ground Lease, the First Utility System City Lease and the First Utility System Indenture.

(C) The City shall do all things necessary to assist the Corporation in the sale, issuance and delivery of the Wastewater Fee Corporation Bonds.

Section 5. Payment of Lease Obligations.

(A) The City shall pay and transfer to the Trustee the rental payments provided for in Article I of the First Utility System City Lease and the other amounts required to be paid by the City pursuant to the provisions of the First Utility System City Lease.

(B) The payments due pursuant to the First Utility System City Lease shall be payable solely from (a) the revenues from collection of the Wastewater Development Impact Fee and (b) the Subordinate Net Revenues, in each case as limited as hereinafter provided. As so limited, such revenues from collection of the Wastewater Development Impact Fee and, except for purposes of Section 1.03(A)(iii) of the First Utility System City Lease for purposes of the Defeasances to which such pledge is not applicable, the Subordinate Net Revenues are hereby pledged by the City to the payments due pursuant to the First Utility System City Lease, and the payments due pursuant to the First Utility System City Lease shall be secured by (y) a senior and paramount lien on and pledge of such revenues from collection of the Wastewater Development Impact Fee and (z) except for purposes of Section 1.03(A)(iii) of the First Utility System City Lease for purposes of the Defeasances to which such pledge is not applicable, a secondary and subordinate lien on and pledge of the Subordinate Net Revenues, subject to the pledge of the System Net Revenues to the Senior Lien Obligations. The payments due pursuant to the First Utility System City Lease shall be equally and ratably secured by said pledge and lien without priority one over the other, and no other obligation shall be secured by said pledge and lien.

(C) (1) The City shall establish and maintain schedules of rates, fees, and charges (and thereafter collect the associated amounts) for all services supplied by the System, fully sufficient at all times, after making reasonable allowance for contingencies and errors in estimates, to make deposits required by Section 6 of this Resolution. Specifically, such rates, fees and charges shall, to the extent permitted by applicable law and in compliance with the applicable requirements of Section 9-511.01, Arizona Revised Statutes, as amended, and any applicable successor statutes thereto, include any rates, fees and charges which contribute

to the Subordinate Net Revenues necessary to satisfy the requirements of Subsection (C)(2). The City shall, to the extent the Council is permitted by applicable law to so resolve, not at any time materially decrease the Wastewater Development Impact Fee or provide or grant any waiver, reimbursement, rebate, credit or other similar relief with respect thereto except for service to municipal facilities and areas designated as "blighted" pursuant to applicable laws of the State unless the City can provide information to each rating service or agency which has assigned and then is maintaining a rating with respect to the Wastewater Fee Corporation Bonds that as a result of doing so the rating then assigned by each such service or agency to the Wastewater Fee Corporation Bonds will not be revised downward.

(2) The Finance Director shall cause Scheduled Unpaid Wastewater Fee Corporation Bonds Debt Service and Actual Unpaid Wastewater Fee Corporation Bonds Debt Service to be calculated by April 15 of each year commencing April 15, 2009, and shall provide written evidence of such calculation to the Trustee. If such amount of Actual Unpaid Wastewater Fee Corporation Bonds Debt Service exceeds such amount of Scheduled Unpaid Wastewater Fee Corporation Bonds Debt Service or if there is a draw on the Wastewater Fee Corporation Bonds Reserve Fund, the City shall determine the amounts by which rates for all wastewater services supplied through the medium of the System (other than the Wastewater Development Impact Fee) must be increased in order to produce amounts of the Subordinate Net Revenues necessary for the purposes of Section 6(D)(6) of this Resolution and shall cause the establishment as finally effective, by not later than the next January 1 (unless a longer period is necessary pursuant to the applicable law and then in such case as soon as reasonably possible pursuant thereto), of such rates.

(D) The obligation of the City to make the rental payments provided for in Article I of the First Utility System City Lease and to make other payments due under the First Utility System City Lease is limited to payment from the sources described hereinabove, and the obligations of the City pursuant to the First Utility System City Lease shall not constitute nor give rise to a general obligation of the City or any claim against its *ad valorem* taxing powers or constitute an indebtedness within the meaning of any statutory or constitutional debt limitation applicable to the City.

Section 6. Senior Lien Obligations; Flow of Funds for Senior Lien Obligations and Wastewater Fee Corporation Bonds.

(A) Authority for First Senior Lien Obligations. The First Senior Lien Obligations may be issued at the discretion of the Council pursuant to the provisions of Title 9, Chapter 5, Article 3, Arizona Revised Statutes, as amended, and other applicable provisions of law. The First Senior Lien Obligations shall have the other terms and conditions provided in the resolution of the Council authorizing the same which shall be, as applicable, the same as provided for Additional Parity Senior Lien Obligations as provided in Section 6(H) of this Resolution, except that principal with respect thereto shall

be payable only on July 1 and interest only on January 1 and July 1. This Resolution shall remain in full force and effect until all of the First Senior Lien Obligations are fully paid, or provisions for their payment shall have been provided for, and all costs and obligations of the City pursuant to any municipal bond insurance policy or agreement for a Senior Lien Obligations Reserve Fund Credit Instrument with respect thereto shall have been fully paid.

(B) Source of Payment and Pledge of System Net Revenues. The First Senior Lien Obligations and the Senior Lien Obligations Policy Costs shall be payable solely from the System Net Revenues. The System Net Revenues are hereby pledged by the City to the payment of the principal of and interest on the First Senior Lien Obligations, and the First Senior Lien Obligations shall be secured by a prior and paramount lien on and pledge of the System Net Revenues. All of the Senior Lien Obligations shall be equally and ratably secured by said pledge and lien without priority one over the other. As security for the repayment obligations of the City with respect to the Senior Lien Obligations Policy Costs, a security interest (subordinate only to that of the Senior Lien Obligations Owners) may be granted in all of the System Net Revenues pledged as security for the Senior Lien Obligations.

(C) Coverage. The City shall establish and maintain schedules of rates, fees, and charges for all services supplied by the System fully sufficient at all times, after making reasonable allowance for contingencies and errors in estimates, (1) to pay the Operation and Maintenance Expenses and (2) to produce an aggregate amount of the System Net Revenues in each Fiscal Year equal to (a) one hundred twenty percent (120%) of the aggregate of the Senior Lien Obligations Debt Service payable on the Senior Lien Obligations in such Fiscal Year and (b) one hundred percent (100%) of the aggregate of the Senior Lien Obligations Policy Costs payable in such Fiscal Year.

(D) Application of Revenues. From and after the delivery of the Wastewater Fee Corporation Bonds and as long as any of the Senior Lien Obligations, Senior Lien Obligations Policy Costs or the Wastewater Fee Corporation Bonds are outstanding, the Revenues shall be deposited with the Depository, as collected, and shall be held in the custody of the City in a fund hereby established and to be known and designated as the "City of Surprise Wastewater System Revenue Fund," herein referred to as the "Revenue Fund." The Revenue Fund shall be disbursed only for the purposes hereinafter authorized and in the following order of priority:

(1) Operation and Maintenance Fund. The money in the Revenue Fund shall be disbursed first from month to month for the payment of Operation and Maintenance Expenses in the manner herein provided. There is hereby established a fund to be known and designated as the "Wastewater System Operation and Maintenance Fund," herein referred to as the "Operation and Maintenance Fund." The first available money in the Revenue Fund shall be used to deposit in the

Operation and Maintenance Fund on or before the tenth (10th) day of each month an amount which, together with any money already on deposit in said fund, will be sufficient to pay Operation and Maintenance Expenses. Money in the Operation and Maintenance Fund shall be kept on deposit with the Depository and shall be held in the custody of the City. Money in the Operation and Maintenance Fund shall be used only for the payment of Operation and Maintenance Expenses as the same become due.

(2) Senior Lien Obligations Bond Fund. From the money remaining in the Revenue Fund after the transfer to the Operation and Maintenance Fund has been so made, there shall next be set aside on or before the tenth (10th) day of each month into a separate and special fund hereby established, money fully sufficient to pay the Senior Lien Obligations Debt Service. Said fund shall be known and designated as the "Wastewater System Revenue Senior Lien Obligations Principal and Interest Fund," herein referred to as the "Senior Lien Obligations Bond Fund." Payments shall be made into the Senior Lien Obligations Bond Fund in the following manner:

(I) There shall be paid into the Senior Lien Obligations Bond Fund monthly, on or before the tenth (10th) day of each month, commencing on the tenth (10th) day of the first month after the First Senior Lien Obligations are issued and each month thereafter through the month before the first interest payment date for the First Senior Lien Obligations, the amount indicated in the resolution authorizing issuance of the First Senior Lien Obligations and, thereafter, one-sixth (1/6th) of the amount necessary to pay the next maturing installment of interest or other payments relating to interest on the outstanding Senior Lien Obligations, except to the extent of moneys otherwise deposited in the Senior Lien Obligations Bond Fund and available for that purpose; and

(II) There shall be paid into the Senior Lien Obligations Bond Fund monthly, on or before the tenth (10th) day of each month, commencing on the tenth (10th) day of the first July after the First Senior Lien Obligations are issued, an amount equal to one-twelfth (1/12th) of the amount necessary to pay the next maturing installment of principal or other payments relating to principal on the outstanding Senior Lien Obligations, whether at maturity or by mandatory redemption, except to the extent of moneys deposited into the Senior Lien Obligations Bond Fund and available for that purpose.

Money in the Senior Lien Obligations Bond Fund shall be kept on deposit with the Depository, shall be held in the custody of the City as a trust fund, shall be used solely, and is hereby expressly and exclusively pledged for the purpose of, paying the Senior Lien Obligations Debt Service. The City shall, prior to the close of business on the third (3rd) Business Day prior to January 1 and July 1 of each year, cause moneys in the Senior Lien Obligations Bond Fund to be deposited with the paying agent or other appropriate party or parties,

or its or their assignees, for the Senior Lien Obligations in an amount sufficient and available to pay when due the Senior Lien Obligations Debt Service.

(3) Senior Lien Obligations Reserve Fund. There is hereby established for the Senior Lien Obligations a separate fund to be known and designated as the "Wastewater System Revenue Senior Lien Obligations Reserve Fund," herein referred to as the "Senior Lien Obligations Reserve Fund." Money in the Senior Lien Obligations Reserve Fund shall be kept on deposit with the Depository and shall be held in the custody of the City. From the money remaining in the Revenue Fund after the transfers to the Operation and Maintenance Fund and the Senior Lien Obligations Bond Fund have been so made, there shall be deposited monthly on or before the tenth (10th) day of each month an amount equal to one-twelfth (1/12th) of the amount required to maintain the Senior Lien Obligations Reserve Fund in an amount equal to the Reserve Requirement For Senior Lien Obligations. No deposit need be made into the Senior Lien Obligations Reserve Fund if the amount contained therein is at least equal to the Reserve Requirement For Senior Lien Obligations or if the City has obtained Senior Lien Obligations Reserve Fund Credit Instruments in an amount not less than the Reserve Requirement For Senior Lien Obligations. The proceedings for the Senior Lien Obligations shall provide for either (a) the deposit of a Senior Lien Obligations Reserve Fund Credit Instrument in an amount not less than the amount necessary to satisfy the Reserve Requirement For Senior Lien Obligations or (b) the deposit of moneys in the Senior Lien Obligations Reserve Fund in an amount not less than the amount necessary to satisfy the Reserve Requirement For Senior Lien Obligations simultaneously with the issuance thereof. Whenever money in the Senior Lien Obligations Reserve Fund is more than the Reserve Requirement For Senior Lien Obligations, such excess shall be deposited in the Revenue Fund. Money in the Senior Lien Obligations Reserve Fund shall be used solely for the payment of Senior Lien Obligation Debt Service as to which there would otherwise be default in such payment. All Senior Lien Obligations Reserve Fund Credit Instruments shall by their terms expire no earlier than the final maturity date of the respective Senior Lien Obligations for which said Senior Lien Obligations Reserve Fund Credit Instrument applies.

(4) Senior Lien Obligations Reimbursement Fund. From the money remaining in the Revenue Fund after the transfers to the Operation and Maintenance Fund, the Senior Lien Obligations Bond Fund and the Senior Lien Obligations Reserve Fund have been so made, there shall next be set aside on or before the tenth (10th) day of each month into a separate and special fund hereby established, money fully sufficient to pay the current Senior Lien Obligations Policy Costs. Said fund shall be known and designated as the "Wastewater System Revenue Senior Lien Obligations Reserve Fund Credit Instrument Reimbursement Fund," herein referred to as the "Senior Lien Obligations Reimbursement Fund." Payments shall be made into the Senior Lien Obligations Reimbursement Fund in the following manner: If a draw or claim against a Senior Lien Obligations Reserve Fund Credit

Instrument has been made or paid, there shall be paid into the Senior Lien Obligations Reimbursement Fund, on or before the tenth (10th) day of each month, commencing on the tenth (10th) day of the month following a draw or a claim against a Senior Lien Obligations Reserve Fund Credit Instrument, an amount equal to one-twelfth (12th) of the amount necessary to pay all Senior Lien Obligations Policy Costs. Moneys in the Senior Lien Obligations Reimbursement Fund shall be held in the custody of the City as a trust fund, shall be used solely, and is hereby expressly and exclusively pledged for, the payment or reimbursement of the issuer or issuers of Senior Lien Obligations Reserve Fund Credit Instruments for Senior Lien Obligations Policy Costs. Senior Lien Obligations Policy Costs owing to the issuer or issuers of a Senior Lien Obligations Reserve Fund Credit Instruments shall be paid from the Senior Lien Obligations Reimbursement Fund in twelve (12) equal monthly installments commencing the tenth (10th) day of the first month following a draw or a claim against a Senior Lien Obligations Reserve Fund Credit Instrument. Senior Lien Obligations Policy Costs with respect to any draw or claim which occurs against more than one Senior Lien Obligations Reserve Fund Credit Instrument shall be paid or reimbursed on a *pro rata* basis (calculated by reference to the maximum amounts available for such reimbursement). If the City fails to pay or reimburse any Senior Lien Obligations Policy Costs, the issuer or issuers of the Senior Lien Obligations Reserve Fund Credit Instruments shall be entitled to exercise any and all remedies available at law or under this Resolution other than (a) acceleration of the maturity of the Senior Lien Obligations or (b) any other remedies which would adversely affect the rights of the Senior Lien Obligations Owners or the registered owners of the Wastewater Fee Corporation Bonds.

(5) Repair and Replacement Fund. Not less than $4,000,000 shall be deposited by the City in a fund hereby established and to be known and designated as the "Wastewater System Repair and Replacement Fund," herein referred to as the "Repair and Replacement Fund," on the date of original authentication and delivery of the Wastewater Fee Corporation Bonds. Thereafter, from the next available money in the Revenue Fund, there shall be deposited monthly on or before the tenth (10th) day of each month into the Repair and Replacement Fund an amount equal to one-twelfth (1/12th) of two per cent (1/12th of 2%) of the Revenues of the System during the preceding Fiscal Year, provided that no such deposits need be made into the Repair and Replacement Fund at such time or times as there is on deposit in such fund an amount at least equal to two percent (2%) of the value of the net tangible assets of the System but in no case less than $4,000,000, as shown on the most recent audited balance sheet of the System. Money in such fund shall be kept on deposit with the Depository, shall be held in the custody of the City and shall be used for making extraordinary repairs or replacements to the System which are necessary to keep the System in operating condition and for the making of which provision has not been made in the annual budget and money is not available as an Operation and Maintenance Expense and for transfer to the Subordinate Lien Obligation Fund as described in Subsection (6)(I)(3rd).

(6) Subordinate Lien Obligations Fund. (I) From and after the delivery of the Wastewater Fee Corporation Bonds and as long as any of the Wastewater Fee Corporation Bonds are outstanding and unpaid, the Computed Portion shall be transferred from the Wastewater Development Impact Fee Fund to the Depository and shall be held in the custody of the City in a fund to be known and designated as the "City of Surprise Wastewater Development Impact Fee and Subordinate Lien Wastewater Utility Revenue Obligations Principal and Interest Fund," herein referred to as the "Subordinate Lien Obligations Fund" prior to the close of business on the tenth (10th) day of the immediately succeeding calendar month. Amounts shall be withdrawn from the Subordinate Lien Obligations Fund for the purposes of Subsection 6(II) hereof in the following order of priority: (1st) from the Computed Portion; (2nd) from investment earnings with respect to the Computed Portion; (3rd) from the money in the Repair and Replacement Fund which shall be transferred therefrom and deposited into the Subordinate Lien Obligations Fund prior to the close of business on the fifteenth day of each month and (4th) if there is a draw on the Wastewater Fee Corporation Bonds Reserve Fund prior thereto, from the money which is the Subordinate Net Revenues remaining in the Revenue Fund after the transfers to the Operation and Maintenance Fund, the Senior Lien Obligations Bond Fund, the Senior Lien Obligations Reserve Fund, the Senior Lien Obligations Reimbursement Fund and the Repair and Replacement Fund, if any, which shall be deposited prior to the close of business on the fifteenth day of each month into the Subordinate Lien Obligations Fund. (The uses described in clause (2nd) of the preceding sentence shall only be allowed to the extent permitted by applicable law, the Mayor and Council of the City hereby resolving that such amounts must be approved for such purposes so that adequate wastewater treatment capacity can be financed for the System and that such applications bear a reasonable relationship to the burden imposed upon the City to provide wastewater treatment services to the related development.)

(II) The City shall, prior to the close of business on the fifteenth day of each month, cause moneys to be deposited with the Trustee in an amount sufficient and available to pay when due the following amounts: an amount equal to one-sixth (1/6th) of the portion of the Current Wastewater Fee Corporation Bonds Debt Service which is interest next due; if there has been a draw upon the Wastewater Fee Corporation Bonds Reserve Fund, an amount equal to one-sixth (1/6th) of the portion of the Current Wastewater Fee Corporation Bond Debt Service which is necessary to restore the Wastewater Fee Corporation Bond Reserve Fund to the amount required to be on deposit therein pursuant to the First Utility System Indenture and an amount equal to one-twelfth (1/12th) of the portion of the Current Wastewater Fee Corporation Bonds Debt Service which is principal next maturing, in each case as rental payments due pursuant to the First Utility System City Lease. (Other Funds (as such term is defined in Subsection 3.02(A) of the First Utility System City

Lease) may be used to make such deposits if determined by the City from time to time.)

(III) The City shall, prior to the close of business on the sixteenth day of each month, cause the remainder of the Computed Portion then on deposit in the Subordinate Lien Obligations Fund (1st) to be applied to pay amounts due pursuant to Section 1.3(a) of the Series 2003 City Lease, dated as of December 1, 2003, by and between the City and the Corporation up to $155,000 due on the twentieth day of each month pursuant to such Series 2003 City Lease; provided, however, that the first application of amounts for such purpose shall not occur until the fourteenth (14th) month after the sale and issuance of the Wastewater Fee Corporation Bonds and (2nd) to be deposited to the Defeasance Fund to be provided, or to be used to acquire securities which would be provided, to the Trustee pursuant to Subsection 7.03(B)(ii)(c) of the First Utility System City Lease. (The Corporation has no other claim on the amount described in clause (1st) (or any other amounts which are the subject of this Resolution) to pay amounts due pursuant to such Series 2003 City Lease.)

(IV) Investment earnings with respect to the Computed Portion while on deposit in the Subordinate Lien Obligations Fund shall, if not necessary for the purpose described in Subsection 6(I)(2nd), be returned to the Wastewater Development Impact Fee Fund on June 30 of each Fiscal Year.

(7) Other. All money remaining in the Revenue Fund after all of the payments required in the foregoing Subsections have been made including all money remaining in the Subordinate Lien Obligations Fund after all of the payments required in Subsection (6) have been made (including for accumulating amounts to provide for the Defeasances) shall be regarded as surplus and may be used for any lawful purpose of the City; provided, however, that if such surplus in the Subordinate Lien Obligations Fund is any of the Computed Portion, such surplus shall be transferred to and re-deposited in the Wastewater Development Impact Fee Fund.

(Deposits into the Operation and Maintenance Fund, the Senior Lien Obligations Bond Fund, the Senior Lien Obligations Reserve Fund, the Senior Lien Obligations Reimbursement Fund, the Repair and Replacement Fund and the Wastewater Subordinate Lien Obligation Fund shall be made by the dates indicated except that when such date shall be a Saturday, Sunday or legal holiday, then such deposits shall be made by the next preceding Business Day. The money in the Revenue Fund shall be allotted and paid into the various funds hereinbefore established in the order in which said funds are listed, and if in any month the money in the Revenue Fund is insufficient to place the required amount in any of said funds, the deficiency shall be made up in the following month or months after payment into all funds enjoying a prior claim to the Revenues has been met in full. Money on deposit in the Revenue Fund, the Operation and Maintenance Fund, the Senior Lien Obligations

Bond Fund, the Senior Lien Obligations Reserve Fund, the Senior Lien Obligations Reimbursement Fund, the Repair and Replacement Fund and the Subordinate Lien Obligation Fund may be invested and reinvested by the City in investments permitted by the laws of the State. All income derived from such investments (except for investments from the Senior Lien Obligations Reimbursement Fund and the Wastewater Subordinate Lien Obligation Fund) shall be regarded as Revenues of the System and shall be deposited in the Revenue Fund. Investments purchased with moneys on deposit in the Senior Lien Obligations Reserve Fund shall have a term to maturity not greater than five (5) years. Such investments shall at any time necessary be liquidated and the proceeds thereof applied to the purpose for which the respective fund or account was created.)

(E) Charges for Services Supplied by the System.

(1) While the Senior Lien Obligations or Senior Lien Obligations Policy Costs remain outstanding and unpaid, the City shall permit no free wastewater services to be furnished to any consumer or user whatsoever except for service to municipal facilities and areas designated "blighted" pursuant to applicable laws of the State, the rates for all wastewater services supplied through the medium of the System to the City and its residents and to all consumers shall be reasonable and just, taking into account and consideration the cost and value of the System and the cost of maintaining and operating the System, the proper and necessary allowances for the depreciation thereof, and the amounts necessary for the payment of the Senior Lien Obligations Debt Service and Senior Lien Obligations Policy Costs and there shall be charged against all users of said wastewater services and against all persons receiving services rendered by the System such rates and amounts as shall be fully adequate to meet the requirements of Sections 6(B) and (C) of this Resolution.

(2) Such schedule of rates shall be revised at such time or times as shall be necessary to meet the requirements of Sections 6(B) and (C) of this Resolution, but such schedules shall not be reduced unless the Senior Lien Obligations Bond Fund, the Senior Lien Obligations Reserve Fund, the Senior Lien Obligations Reimbursement Fund and the Repair and Replacement Fund are in their total minimum amounts and all Senior Lien Obligations Policy Costs due and owing have been paid in full.

(F) Covenants Regarding the Operation of the System.

(1) The City shall maintain the System in good condition and operate the same in an efficient manner and at reasonable cost. It is hereby, to the extent permitted by applicable law, resolved that the City is financing amounts sufficient to construct, and shall otherwise contract for use of, properties and facilities which will be part of the System to provide such an amount of capacity. It is also hereby, to the extent permitted by applicable law, resolved that the City shall use all efforts such that the potable water production and distribution system serving the City

shall provide an amount of capacity required to create flows of water which will result in flows of wastewater anticipated by the wastewater treatment capacity described in the preceding sentence.

(2) The City shall maintain insurance on the properties of the System for the benefit of the Senior Lien Obligations Owners of a kind and in an amount which would normally be carried by municipalities or private companies engaged in a similar type of business, and the proceeds of any such insurance, except public liability insurance, received by the City shall be used to replace the part or parts of the System damaged or destroyed or if not so used shall be placed in the Repair and Replacement Fund in addition to all other moneys required to be deposited in the Repair and Replacement Fund.

(3) The City shall cause to be kept proper books and accounts adapted to the System and shall cause the books and accounts to be audited at the end of each Fiscal Year by a recognized independent firm of certified public accountants and shall make available to the registered owners of any of the Bonds the balance sheet and the profit and loss statement of the System as certified by such accountants, that each such audit, in addition to whatever matters may be thought proper by the accountants to be included therein, shall include the following:

(I) A statement in detail of the income and expenditures of the System for such Fiscal Year,

(II) A balance sheet of the System as of the end of such Fiscal Year,

(III) The accountants' comment regarding the manner in which the City has carried out the requirements of this Resolution and the accountants' recommendation for any changes or improvements in the operation of the System,

(IV) The number of customers of the System at the beginning and at the end of such Fiscal Year and

(V) The disposition of any proceeds of any of the Senior Lien Obligations during such Fiscal Year.

All expenses incurred in the making of the audits required by this Subsection shall be regarded and paid as an Operation and Maintenance Expense; the City shall furnish copies of such audits to the Senior Lien Obligations Owners, at their request, within one hundred eighty (180) days after the close of each Fiscal Year, and in addition thereto furnish to any Senior Lien Obligations Owners, who may have so requested, quarterly operating statements covering the operation of the System for such quarter; the Senior Lien Obligations Owners shall have at all reasonable times the right to inspect the System and the records, accounts and data of the City relating thereto and if the City fails to provide the audits and reports required by this

Subsection, the Senior Lien Obligations Owners of twenty-five percent (25%) in aggregate principal amount of the Senior Lien Obligations may cause such audits and reports to be prepared at the expense of the City.

(4) The City shall faithfully and punctually perform all duties with reference to the System required by the Constitution and laws of the State, including the making and collecting of reasonable and sufficient rates for services rendered by the System as above provided and shall segregate the Revenues of the System and apply the Revenues to the funds specified in this Resolution.

(5) The City shall not sell, lease, mortgage or in any manner dispose of the System or any part thereof, including any and all extensions and additions that may be made thereto, until all of the Senior Lien Obligations and Senior Lien Obligations Policy Costs shall have been paid in full, provided, however, that this covenant shall not be construed to prevent the disposal by the City of property which in the judgment of the Council has become inexpedient for use in connection with the System when other property of equal value is substituted therefor or when the proceeds of the disposition of such property are placed in the Repair and Replacement Fund in addition to all other amounts required to be placed in said fund in the current Fiscal Year.

(6) The Council shall, prior to the beginning of each Fiscal Year, commencing with the Fiscal Year beginning July 1, 2007, prepare and adopt a budget of estimated Revenues and Operation and Maintenance Expenses for the ensuing Fiscal Year and shall undertake to operate the System within such budget to the best of its ability; copies of such budgets and amendments thereto shall be made available to the Senior Lien Obligations Owners upon request; Maintenance and Operation Expenses incurred in any year shall not exceed the reasonable and necessary amounts therefor and the Council shall not expend any amounts or incur any obligations therefor in excess of the amounts provided for Maintenance and Operation Expenses in the annual budget, except upon resolution by the Council determining that such additional expenses are necessary to operate and maintain the System.

(7) The City shall, to the extent not otherwise prohibited by applicable law, discontinue the service to any premises in compliance with City policy and procedure and shall not restore service until resolved.

(8) The City, in order to assure the efficient management and operation of the System and to assure the Senior Lien Obligations Owners that the same shall be operated on sound business principles shall employ competent and experienced management for the System, shall use its best efforts to see that the System is at all times operated and maintained in good repair and condition and in such manner that the operating efficiency thereof shall be of good

character, and shall use its best efforts to see that the cost of such maintenance and operation is at no time in excess of the money reasonably available for the payment thereof.

(9) The City shall from time to time duly pay and discharge, or cause to be paid and discharged, all taxes, assessments or other governmental charges, if any, lawfully imposed upon the System, or upon any part thereof, or upon any Revenues when the same shall become due, as well as any lawful claims for labor and materials and supplies which, if unpaid, might by law become a lien or charge upon the System, or any part thereof, or upon any Revenues, or which might impair the security of the Senior Lien Obligations and, subject to the provisions of this Resolution, shall duly observe and conform to all valid requirements of any governmental authority relative to the System, or any part thereof, and to all covenants, terms and conditions of this Resolution applicable thereto.

(10) If all or any part of the System shall be taken by *eminent domain* proceedings or other proceedings authorized by law, the net proceeds realized by the City therefrom shall be deposited in a special fund, in trust, subject to the rights of the Senior Lien Obligations Owners to share in such net proceeds equally and ratably in the proportion which the principal amount of Senior Lien Obligations owned or held by each owner bears to the total principal amount of all of the Senior Lien Obligations then outstanding, and without preference or priority of any one over any other, to share in such net proceeds.

(11) To the extent permitted by law, the City shall not grant a franchise or a permit for the operation of any competing wastewater system in the City, provided however, that this covenant shall not prohibit the City from entering into "privatization" contracts, agreements or other similar arrangements with private parties.

(12) Each officer of the City or person having custody of funds of the System shall be under fidelity bond at all times in an amount not less than the total funds in the custody of such officer or person at any one time.

(G) Remedies of Senior Lien Obligations Owners.

(1) Any Senior Lien Obligations Owner may either at law or in equity, by suit, action, mandamus or other proceedings, in any court of competent jurisdiction protect the lien created by this Resolution on the Revenues and enforce and compel performance of all duties imposed upon the City by the provisions of this Resolution, including the making and collecting of sufficient rates and revenues, the segregation of the Revenues of the System and the proper application thereof.

(2) If any default be made in the payment of principal of or interest on any of the Senior Lien Obligations, then

upon the filing of suit by any Senior Lien Obligations Owner, any court having jurisdiction of the action may appoint a receiver to administer the System on behalf of the City with power to charge and collect fees sufficient to provide for the payment of all Senior Lien Obligations outstanding against the System and for payment of operating expenses and to apply the Revenues in conformity with the provisions of this Resolution.

(3) In determining whether a payment default has occurred, no affect shall be given to payments made under a municipal bond insurance policy for any of the Senior Lien Obligations. Any waiver of a default shall be subject to the prior written consent of the providers of such policies. Remedies shall be cumulative with respect to the Senior Lien Obligations Owners. If any remedial action is discontinued or abandoned, the Senior Lien Obligations Owners and the providers of such policies shall be restored to their former positions.

(H) Additional Parity Senior Lien Obligations. Additional Parity Senior Lien Obligations may hereafter be issued, but only as provided in this Subsection and in any agreement relating to Additional Parity Lien Obligations and only for the purposes of obtaining funds to make improvements and expansions to the System, to purchase capacity rights in sewage treatment plant facilities owned by other political subdivisions of the State, to acquire existing property, plant and equipment, land and rights in land for the System, to provide reasonable reserves for the Additional Parity Senior Lien Obligations, including capitalization of interest and a reserve fund for the Additional Parity Senior Lien Obligations, to refund Additional Parity Senior Lien Obligations or to refund other bonds of the City, whether revenue bonds, general obligation bonds or other bonds or obligations, issued to provide funds to construct or acquire existing property, plant and equipment, additions, extensions, improvements, expansions or replacements to the System, subject to the following conditions:

(I) The City will not, at the time of the issue of such Additional Parity Senior Lien Obligations, be in default under this Resolution, any agreement with respect to a Senior Lien Obligations Reserve Fund Credit Instrument or any resolution providing for, or entered into with respect to, the issuance of Additional Parity Senior Lien Obligations.

(II) The issuance of Additional Parity Senior Lien Obligations will be duly authorized at an election, if required by law, except as to any bonds or obligations to be issued exclusively for the purpose of refunding then outstanding Senior Lien Obligations.

(III) The issuance of Additional Parity Senior Lien Obligations will be provided for by a resolution duly adopted by the Council, and such Additional Parity Senior Lien

Obligations will mature and interest will be paid on the same days of the year as the First Senior Lien Obligations.

(IV) (a) The System Net Revenues for the last full Fiscal Year immediately preceding the issuance of such Additional Parity Senior Lien Obligations, as shown in a certificate or report of an independent public accountant or firm of such accountants presented to the Clerk of the City, have been (i) not less than one hundred twenty percent (120%) of the highest year's debt service, calculated with regard to the highest rate of interest to be borne on all of the Senior Lien Obligations then outstanding and on the Additional Parity Senior Lien Obligations to be issued and (ii) not less than one hundred percent (100%) of the aggregate of Senior Lien Obligations Policy Costs then due and owing.

(For the purposes of this Subsection additional amounts may be added to the System Net Revenues as shown on the accountant's certificate or report in the following circumstances:

(i) If Revenues have been increased as a result of construction of additions or acquisitions to the System made prior to the issuance of such Additional Parity Senior Lien Obligations but during either the Fiscal Year in which the Additional Parity Senior Lien Obligations are to be issued or in the preceding Fiscal Year, such increased Revenues may be treated as if such additions to the System were completed on the first day of the Fiscal Year used for purposes of computation. The Revenues derived from such additions and acquisitions to the System may be converted for purposes of computation to estimated System Net Revenues which would have been derived therefrom if said additions and acquisitions had actually been completed on the first day of the year used for computation purposes, such estimates to be made by an independent engineer or firm of such engineers having a favorable reputation with respect to such matters.

(ii) If all or part of the proceeds of the Additional Parity Senior Lien Obligations are to be expended for the acquisition of existing wastewater properties or facilities, there may be added to the System Net Revenues of such preceding Fiscal Year the System Net Revenues derived from the operation of such properties or facilities to be acquired as converted to System Net Revenues which would have been derived from the operation of such properties or facilities had such properties or facilities been operated by the City under the applicable rate schedule of the City during the entire Fiscal Year, such converted System Net Revenues to be estimated by an independent engineer or firm of such engineers having a favorable reputation with respect to such matters.

(iii) If prior to the issuance of the Additional Parity Senior Lien Obligations and subsequent to the first day of such preceding Fiscal Year, the City shall have increased its rates or charges imposed for wastewater services, there may be added to the System Net Revenues of such Fiscal Year the additional System Net Revenues which would have been received from the operation of the System during such Fiscal Year had such increase been in effect throughout such Fiscal Year, such additional System Net Revenues to be estimated by an independent engineer or firm of such engineers having a favorable reputation with respect to such matters.)

(b) In the event Additional Parity Senior Lien Obligations are to be issued exclusively for the purpose of refunding or retiring a portion of Senior Lien Obligations then outstanding, for the purpose of the calculation required under this Subsection, the percentage requirement on the Senior Lien Obligations will be taken into consideration only in any future Fiscal Year in which any fractional part of the Senior Lien Obligations will remain outstanding after the issuance of such Additional Parity Senior Lien Obligations; provided that nothing in this Resolution contained will limit or restrict the issuance of any Additional Parity Senior Lien Obligations if, before or as a result of the issuance and delivery of such Additional Parity Senior Lien Obligations, the Senior Lien Obligations theretofore issued will no longer be outstanding, or full payment for the Senior Lien Obligations outstanding will be provided for by funds from the bond or obligation proceeds.

(I) Modification of Section 6 of Resolution.

(A) Without the consent of or notice to any of the Senior Lien Obligations Owners, the City may modify this Section and any of the definitions used in such Section (except Subsection (D)(6) and the definitions particular to such Subsection) for one or more of the following purposes:

(1) To cure any ambiguity or formal defect or omissions herein or to correct or supplement any provision herein which may be inconsistent with any other provision therein.

(2) To grant or confer upon the Senior Lien Obligations Owners any additional rights, remedies, powers, or authority that may lawfully be granted or conferred upon them.

(3) To secure additional Revenues or provide additional security or reserves for the payment of the Senior Lien Obligations.

(4) To issue Additional Parity Senior Lien Obligations; provided that such amendment does not adversely affect the registered owners of the Wastewater Fee Corporation Bonds.

(5) To comply with the requirements of any federal securities laws or the Trust Indenture Act of 1939, as from time to time amended, if required by law or regulation lawfully issued thereunder.

(6) To permit, preserve, or continue (in the event of a change in the Internal Revenue Code of 1986, as amended, which requires a supplement hereto in order to continue such exclusion) the exclusion of the interest income on the Senior Lien Obligations from gross income (as defined by such Code) or the exemption from state income taxes and to preserve the power of the City to continue to issue bonds or other obligations (specifically not limited to the Senior Lien Obligations authorized hereby) the interest income on which is likewise excluded from gross income (as defined by such Code) for federal income tax purposes and exempt from State income taxes.

(7) To vest in any issuer of a Senior Lien Obligations Reserve Fund Credit Instrument the same or similar rights afforded herein to any Senior Lien Obligations Owner or to any other issuer of a Senior Lien Obligations Reserve Fund Credit Instrument.

(8) To provide such remedies and assurances as may be necessary to induce issuers of Senior Lien Obligations Reserve Fund Credit Instruments or to induce insurers of the Senior Lien Obligations to issue municipal bond insurance policies with respect to the Senior Lien Obligations and to conform such Section of this Resolution to any agreement for a the Senior Lien Obligations Reserve Fund Credit Instrument.

(B) (1) Except as provided in Subsection (A) of this Section, a majority in principal amount of the Senior Lien Obligations at any time outstanding (not including in any case any Senior Lien Obligations which may then be held or owned by or for the account of the City, but including such refunding bonds as may be issued for the purpose of refunding any of the Senior Lien Obligations authorized if such refunding bonds are not owned by the City) shall have the right from time to time to consent to and approve the adoption by the City of a resolution or resolutions modifying or amending such terms or provisions; provided, however, that this Resolution may not be so modified or amended in such manner as to:

(I) Make any change in the maturity of any of the Senior Lien Obligations.

(II) Make any change in the rate of interest borne by any of the Senior Lien Obligations.

(III) Reduce the amount of the principal or redemption premium, if any, payable on any Senior Lien Obligation.

(IV) Modify the terms of payment of principal of or interest, or of redemption premium, if any, on the Senior Lien Obligations or any of them or impose any conditions with respect to such payment.

(V) Affect the rights of the Senior Lien Obligations Owners of less than all of the Senior Lien Obligations then outstanding.

(2) Whenever the City shall propose to amend or modify this Resolution under the provisions of this Section, it shall cause notice of the proposed amendment to be mailed by first class mail, postage prepaid, to the Senior Lien Obligations Owners. Such notice shall briefly set forth the nature of the proposed amendment and shall state that a copy of the proposed amendatory resolution is on file in the Office of the Clerk of the City for public inspection.

(3) Whenever at any time within one (1) year from the date of the mailing of said notice there shall be filed with the Clerk of the City an instrument or instruments executed by the Senior Lien Obligations Owners of a majority in aggregate principal amount of the Senior Lien Obligations then outstanding as described in said notice and shall specifically consent to and approve the adoption thereof, thereupon, but not otherwise, the Council may adopt such amendatory resolution and such resolution shall become effective.

(4) If the Senior Lien Obligations Owners of a majority in aggregate principal amount of the Senior Lien Obligations outstanding as in this Section defined, at the time of the adoption of such amendatory resolution, or the predecessors in title of such Senior Lien Obligations Owners, shall have consented to and approved the adoption thereof as herein provided, no Senior Lien Obligations Owner whether or not such Senior Lien Obligations Owner shall have consented to or shall have revoked any consent as in this Section provided, shall have any right or interest to object to the adoption of such amendatory resolution or to object to any of the terms or provisions therein contained or to the operation thereof or to enjoin or restrain the City from taking any action pursuant to the provisions thereof.

(5) Any consent given by the Senior Lien Obligations Owner of a Senior Lien Obligation pursuant to the provisions of this Section shall be irrevocable for a period of six (6) months from the date of the mailing of the notice above provided for and shall be conclusive and binding upon all future registered owners of the same Senior Lien Obligation during such period. Such consent may be revoked at any time after six (6) months from the date of the mailing of such notice by the registered owner who gave such consent or by a successor in title by filing notice of such revocation with the Clerk of the City, but such revocation shall not be effective if the registered owners of a majority in aggregate principal amount

of the Bonds outstanding as in this Section defined have, prior to the attempted revocation, consented to and approved the amendatory resolution referred to in such revocation.

(6) The fact and date of the execution of any instrument under the provisions of this Section may be proved by the certificate of any officer in any jurisdiction who by the laws thereof is authorized to take acknowledgments of deeds within such jurisdiction, that the person signing such instrument acknowledged before him the execution thereof, or may be proved by an affidavit of a witness to such execution sworn to before such officer.

(7) The amount and numbers of the Senior Lien Obligations held by any person executing such instrument and the date of the holding of the same may be proved by a certificate executed by the bond registrar of the applicable Senior Lien Obligations showing that on the date therein mentioned such person was the registered owner of the Senior Lien Obligations on the registration books for the Senior Lien Obligations maintained by such bond registrar and described in such certificate.

Section 7. Miscellaneous.

(A) After the Wastewater Fee Corporation Bonds are delivered by the Trustee to the Purchaser upon receipt of payment therefor, this Resolution shall be and remain irrepealable until, except as otherwise provided by Section 6(A) of this Resolution, the Wastewater Fee Corporation Bonds and the interest thereon shall have been fully paid, cancelled and discharged.

(B) If any section, paragraph, clause or provision of this Resolution shall for any reason be held to be invalid or unenforceable, the invalidity or unenforceability of such section, paragraph, clause or provision shall not affect any of the remaining provisions of this Resolution.

(C) All orders and resolutions or parts thereof, inconsistent herewith, are hereby waived to the extent only of such inconsistency. This waiver shall not be construed as reviving any order or resolution or any part thereof.

Section 8. Emergency. The immediate operation of this Resolution is necessary for the financing on the most attractive terms available to the City of the Project and the preservation of the public health and welfare; an emergency is hereby declared to exist; this Resolution shall be in full force and effect from and after its passage and approval by the Council of the City, as required by law and this Resolution is hereby exempt from the referendum provisions of the constitution and laws of the State.

PASSED AND ADOPTED this 12th day of April, 2007.

.....
Joan Shafer, Mayor, City of Surprise, Arizona

ATTEST:

.....
Sherry Aguilar, Clerk, City of Surprise, Arizona

APPROVED AS TO FORM:

.....
, City Attorney, City of Surprise, Arizona

327756806.8-5/9/2007

33

CITY OF SURPRISE
Main Agenda

April 12, 2007 @ 6:00:00 PM

← Back Print

Council Meeting Date:	April 12, 2007	Contact Person:	Robert Nilles, Finance Department
Submitting Department:	Finance	District:	Citywide
Staff Recommendations:	Approve		

Consent	Regular x	Public Hearing	Report/Discussion

Agenda Wording:

Consideration and action on Resolution Number 07-45; A resolution of the Mayor and Council of the City of Surprise, Arizona, authorizing the execution and delivery of a First Utility System Ground Lease, a First Utility System City Lease, a Bond Purchase Contract and a First Utility System Continuing Disclosure Agreement; providing for the collection and disposition of the revenues to be derived from the Wastewater System of the city; making other provisions with respect to the operation of said Wastewater System; providing for certain matters with respect to the collection and disposition of revenues from the Wastewater Development Impact Fees of the city and other matters related thereto with respect to revenues to be derived from the Wastewater System of the city; providing for the security and payment of such First Utility System Lease; approving the execution and delivery by City of Surprise Municipal Property Corporation of such ground lease, such city lease, a First Utility Trust Indenture and such purchase contract; approving an Official Statement; approving the issuance of not to exceed $55,000,000 aggregate principal amount of City of Surprise Municipal Property Corporation Wastewater Development Impact Fee and Subordinance Lien Wastewater Utility Revenue Bonds, Series 2007; delegating to the Finance Director of the city the authority to determine various terms with respect to the bonds and the sale thereof; providing for the transfer of certain moneys for the payment thereof and making certain covenants and agreements with respect thereto; authorizing the taking of all other actions necessary to the consummation of the transactions contemplated by this Resolution and declaring an emergency.

Motion:

I move to approve Resolution #07-45.

Background:

Approximately 1/2 of the 8 mgd expansion of the plant is to be paid for with existing funds while the other 1/2 will require this bonding to complete the project. This expansion of the facility is necessary for the future growth of Special Planning Area #1. This plant expansion is intended to be paid for with Sewer Development Fees. Approximately $500,000 per month will be needed to pay the debt on this borrowing and the previous borrowing. If development fees are insufficient to pay the debt then the Sewer Operations Fund will have to loan the money to the development fee fund. If that happens sewer utility rates would need to be looked at to see if they need to be raised.

Not authorizing the debt would mean that money would need to be taken from the General Fund or other sources to complete the project, or that the expansion of the plant would need to stop thereby limiting the future growth of Special Planning Area #1.

Authorizing the debt would mean that the bonds would have to be paid back with interest. As an example; if the City receives $44 million in bond proceeds, the total repayment on that $44 million might be $83 million.

Financial Impact Statement:

If this item is approved by the Council, the issuance of bonds will have a financial impact on the City. The debt service associated with this item will be paid for by sewer development fees, or by the sewer operations fund, in the form of a loan, if the development fees are insufficient. This would trigger an analysis of the sewer rates and could lead to a rate increase for sewer.

ATTACHMENTS:

Click to download

- ☐ Authorizing Resolution
- ☐ First Utility System City Lease
- ☐ First Utility System Ground Lease
- ☐ First Utility System Trust Indenture
- ☐ Surprise MPC Bond Purchase Contract
- ☐ Preliminary Bond Offering Statement

Meeting Requirements:

Powerpoint x Video White Board Other x

Presentation Speaker Names (spelling and titles for TV captions):

Robert Nilles, Finance Director
Jim Stricklin, Managing Director, PHS&G

City Clerk's Office Only:

Council Action:
Motion/Second

Shafer	
Elkins	S
Bails	
Sullivan	M
Arismendez	
Johnson	
Foro	

Results:

For	7
Against	
Passed	X
Failed	
Continue	
Tabled	
Absent	

Exhibit E Debt Service Reserve Requirement

See Exhibit D

Exhibit F Replacement Reserve Requirements

See Exhibit D

Exhibit H Form of Tax Compliance Certificate of Local Borrower

Water Infrastructure Finance Authority of Arizona

$1,500,000.00 Loan to City of Surprise

The Water Infrastructure Finance Authority of Arizona (the "Authority") and City of Surprise (the "Local Borrower") are entering into a Loan Agreement (the "Loan Agreement") in the maximum principal amount stated above pursuant to which the Authority will make a loan (the "Loan") to the Local Borrower. In connection with its state revolving fund programs, the Authority issues its bonds ("Authority Bonds") from time to time to finance loans and the Authority also pledges certain loans to secure and to serve as the source of payment for the Authority Bonds. As a result, and under the provisions of federal tax law applicable to the Authority Bonds, it is in the Authority's interest for the Loan to qualify and be a Tax-Exempt Obligation that is not an AMT Obligation. Therefore, in order to establish certain facts necessary for the Loan to qualify and be treated as a Tax-Exempt Obligation that is not an AMT Obligation, and as required by the provisions of the Loan Agreement, the Local Borrower by its officer signing this Certificate, certifies, represents, and covenants as follows with respect to the Loan. All statements in this Certificate are of facts or, as to events to occur in the future, reasonable expectations.

I. DEFINITIONS

1.10. Attachment A. The definitions and cross-references set forth in Attachment A apply to this Certificate and its Attachments. All terms relating to a particular issue, such as Sale Proceeds, relate to the Loan, unless indicated otherwise. (For example, "Sale Proceeds" refers to Sale Proceeds of the Loan, unless indicated otherwise.)

1.20. Special Definitions. Terms used herein, to the extent not defined in Attachment A or below, have the same meaning as defined in the Loan Agreement. In addition, the following definitions apply to this Certificate and its Attachments:

"Instructions" means the Rebate Instructions attached hereto as Attachment A-1.

"Issue" means the Loan.

"Issuer" means the Local Borrower.

"Project" means the financing of a portion of the costs of acquisition, construction and improvement of facilities to be financed by the Loan and includes Issuance Costs and interest on the Loan for up to three years from the Issuance Date or, if later, one year after the date the Project is placed in service, all of which are governmental purposes for purposes of the Code.

"Reserve Fund" is defined in 3.40(a).

1.30. References. Reference to a Section means a section of the Code. Reference by number only (for example, "2.10") means that numbered paragraph of this Certificate. Reference to an Attachment means an attachment to this Certificate.

II. ISSUE DATA

2.10. Issuer. The Issuer is a Governmental Unit.

2.20. Purpose of Issue. The Issue is being issued to provide funds to pay costs of the Project.

2.30. Dates. The Sale Date of the Issue is the date on which the Loan Agreement is executed and delivered by the Authority and the Local Borrower, and the Issuance Date of the Issue is the first date on which the aggregate draws under the Loan exceed the lesser of $50,000 or 5% of the principal amount of the Loan.

2.40. Issue Price. The Issue Price of the Issue is the principal amount actually advanced by the Authority to the Issuer as the Loan.

2.50. Sale Proceeds, Net Proceeds, and Net Sale Proceeds. The amount of Sale Proceeds equals the Issue Price. The amount of Net Proceeds equals the Issue Price minus the amount of Proceeds (if any) deposited in the Reserve Fund (if any). The amount of Net Sale Proceeds equals the amount of Net Proceeds minus the Minor Portion.

2.60. Disposition of Sale Proceeds. There will be no Pre-Issuance Accrued Interest with respect to the Issue. The Sale Proceeds will be used to pay costs of the Project and, if applicable, to fund the Reserve Fund (if any).

2.70. Higher Yielding Investments. Gross Proceeds will not be invested in Higher Yielding Investments except for (A) the Minor Portion to the extent provided in 3.80, (B) those Gross Proceeds identified in 3.10, 3.20, and 3.30, but only during the applicable Temporary Periods there described for those Gross Proceeds, and (C) Gross Proceeds held in the Reserve Fund (if any) to the extent set forth in 3,40(a).

2.80. Single Issue. No other obligations have been or will be sold less than 15 days before or after the Sale Date pursuant to the same plan of financing with the Issue that are expected to be paid from substantially the same source of funds as the Issue, determined without regard to guarantees from a person who is not a Related Party to the Issuer. Accordingly, no obligations other than those of the Issue are a part of a single issue with the Issue.

III. ARBITRAGE (NONREBATE) MATTERS

3.10. Use of Net Sale Proceeds and Pre-Issuance Accrued Interest; Temporary Periods.

(A) Pre-Issuance Accrued Interest. There will be no Pre-Issuance Accrued Interest with respect to the Issue.

(B) Payment of Costs of the Project.

(1) All of the Net Sale Proceeds will be used to pay costs of the Project. Such Sale Proceeds may be used to acquire or hold Higher Yielding Investments for a period ending on the third anniversary of the Issuance Date (such period being the Temporary Period for such amount) because the following three tests are reasonably expected to be satisfied:

(i) At least 85% of the Net Sale Proceeds will be allocated to expenditures on the Project by the end of the Temporary Period;

(ii) Within 6 months of the Issuance Date, the Issuer will incur substantial binding obligations to third parties to expend at least 5% of the Net Sale Proceeds on the Project; and

(iii) Completion of the Project and allocation of the Net Sale Proceeds to expenditures will proceed with due diligence.

Any Sale Proceeds that remain unspent on the third anniversary of the Issuance Date, which is the expiration date of the Temporary Period for such Proceeds, shall not be invested in Higher Yielding Investments with respect to the Issue after that date except as part of the Minor Portion. In complying with the foregoing sentence, the Issuer may take into account "yield reduction payments" (within the meaning of Regulations §1.148-5(c)) paid to the United States.

(2) Any Reimbursement Allocation will qualify as a Reimbursement of Prior Capital Expenditures and will be made by an entry in the financial records of the Issuer kept with respect to the Issue showing that Sale Proceeds of the Issue have been returned to the fund or account of the Issuer from which such amount was originally and temporarily advanced to finance Capital Expenditures paid before this date by not more than (A) 18 months after the later of the date such Capital Expenditures were paid or the date on which the property resulting from such Capital Expenditures and comprising part of the Project was placed in service or (B) three years after the original expenditures were paid.

3.20. Investment Proceeds. Any Investment Proceeds will be used to pay costs of the Project and may be invested in Higher Yielding Investments during the Temporary Period identified in 3.10(B)(1) or, if longer, one year from the date of receipt, such period being the Temporary Period for such Proceeds.

3.30. Payment Fund. Amounts deposited from time to time in the fund of the Issuer from which payments will be made on the Issue, which is a Bona Fide Debt Service Fund, will be used to pay Debt Service on the Issue within 13 months after the amounts are so deposited, such period being the Temporary Period for such amounts.

3.40. Reserve Funds.

(A) Debt Service Reserve Fund. If (and only if) the Loan Agreement requires the funding of a debt service reserve fund ("Reserve Fund") in cash: The amount of Proceeds of the Loan deposited in the Reserve Fund shall not exceed

10% of the stated principal amount of the Loan. Amounts in the portion of the Reserve Fund allocable to the Issue may be invested in Higher Yielding Investments with respect to the Issue to the extent that such amounts do not exceed the least of (i) 10% of the principal amount of the Issue; (ii) maximum annual Debt Service; and (iii) 125% of average annual Debt Service. Any amounts in the portion of the Reserve Fund allocable to the Issue in excess of the least of these amounts will not be invested in Higher Yielding Investments with respect to the Issue. In complying with the yield restriction set forth in this Section, the Issuer may take into account "yield reduction payments" (within the meaning of Regulations § 1.148-5(c)) timely paid or to be timely paid to the United States because amounts in the Reserve Fund (other than investment earnings) are not reasonably expected to be used to pay Debt Service other than in connection with reductions in the amount required to be in the Reserve Account. The establishing and funding of the Reserve Fund was reasonably required by the Authority as a condition of making the Loan.

(B) Replacement Reserve Fund. If (and only if) the Loan Agreement requires the funding of a replacement reserve fund ("Replacement Reserve Fund") in cash: The Replacement Reserve Fund may be used for one or more of the following purposes: (i) the acquisition of new, or the replacement of obsolete or worn out, machinery, equipment, furniture, fixtures or other personal property for the Issuer's utility system, provided that the property is depreciable; (ii) the performance of repairs with respect to the Issuer's utility system that are of an extraordinary and non-recurring nature, provided that the property is depreciable; (iii) the acquisition or construction of additions to or improvements, extensions or enlargements to, or remodeling of, the Issuer's utility system, provided that the property is depreciable; and/or (iv) to make Debt Service payments to the Authority on the Issue (collectively, the "Permitted Uses"). The Issuer reasonably expects to use amounts in the Replacement Reserve Fund for Permitted Uses other than to make Debt Service payments to the Authority on the Issue, and therefore there is no reasonable assurance of the availability of those amounts to make Debt Service payments to the Authority on the Issue if the Issuer encounters financial difficulties

3.50. No Other Replacement Fund or Assured Available Funds. Except as described in 3.30 and, if and to the extent applicable, 3.40(A), , the Issuer has not established and does not expect to establish or use any sinking fund, debt service fund, redemption fund, reserve or replacement fund, or similar fund, or any other fund to pay Debt Service on the Issue. Except for money referred to in 3.30 and Proceeds of a Refunding Issue, if any, no other money or Investment Property is or will be pledged as collateral or used for the payment of Debt Service on the Issue (or for the reimbursement of any others who may provide money to pay that Debt Service), or is or will be restricted, dedicated, encumbered, or set aside in any way as to afford the holders of the Issue reasonable assurance of the availability of such money or Investment Property to pay Debt Service on the Issue.

3.60. No Overissuance. The Proceeds of the Issue are not reasonably expected to exceed the amount needed for the governmental purposes of the Issue as set forth in 2.20.

3.70. Other Uses of Proceeds Negated. Except as stated otherwise in this Certificate, none of the Proceeds of the Issue will be used:

(A) to pay principal of or interest on, refund, renew, roll over, retire, or replace any other obligations issued by or on behalf of the Issuer or any other Governmental Unit,

(B) to replace any Proceeds of another issue that were not expended on the project for which such other issue was issued,

(C) to replace any money that was or will be used directly or indirectly to acquire Higher Yielding Investments,

(D) to make a loan to any person or other Governmental Unit,

(E) to pay any Working Capital Expenditure other than expenditures identified in Regulations §1.148-6(d)(3)(ii)(A) and (B) (i.e., Issuance Costs of the Issue, Qualified Administrative Costs, reasonable charges for a Qualified Guarantee or for a Qualified Hedge, interest on the Issue for a period commencing on the Issuance Date of the Issue and ending on the date that is the later of three years from such Issuance Date or one year after the date on which the project financed or refinanced by the Issue was or will be placed in service, payments of the Rebate Amount, and costs, other than those already described, that do not exceed 5% of the Sale Proceeds and that are directly related to Capital Expenditures financed or deemed financed by the Issue, principal or interest on an issue paid from unexpected excess Sale Proceeds or Investment Proceeds, and principal or interest on an issue paid from investment earnings on a reserve or replacement fund that are deposited in a Bona Fide Debt Service Fund), or

(F) to reimburse any expenditures made prior to the Issuance Date except those that qualify as a Reimbursement of Prior Capital Expenditures.

No portion of the Issue is being issued solely for the purpose of investing Proceeds in Higher Yielding Investments.

3.80. Minor Portion. The Minor Portion is equal to the lesser of 5% of the Sale Proceeds of the Issue and $100,000. Such Minor Portion may be invested in Higher Yielding Investments with respect to the Issue.

3.90. No Other Replacement Proceeds. That portion of the Issue that is to be used to finance Capital Expenditures has a weighted average maturity that does not exceed 120% of the weighted average reasonably expected economic life of the property resulting from such Capital Expenditures.

IV. REBATE MATTERS

4.10. Issuer Obligation Regarding Rebate. Consistently with its covenants contained in the Loan Agreement, the Issuer will calculate and make, or cause to be calculated and made,

payments of the Rebate Amount in the amounts and at the times and in the manner provided in Section 148(f) with respect to Gross Proceeds to the extent not exempted under Section 148(f)(4) and the Instructions.

4.20. No Avoidance of Rebate Amount. No amounts that are required to be paid to the United States will be used to make any payment to a party other than the United States through a transaction or a series of transactions that reduces the amount earned on any Investment Property or that results in a smaller profit or a larger loss on any Investment Property than would have resulted in an arm's length transaction in which the Yield on the Issue was not relevant to either party to the transaction.

4.30. Exceptions.

(A) Small Issuer Exception. The Issue is exempt under Section 148(f)(4)(D) from the rebate requirement **if all** of the following requirements are satisfied:

(1) The Issuer is a Governmental Unit with general taxing powers within the meaning of Section 148(f)(4)(D), and

(2) No part of the Issue is a Private Activity Bond, and

(3) All of the Net Proceeds will be used for "local governmental activities" of the Issuer within the meaning of Section 148(f)(4)(D) and none of the Net Proceeds will be used for any Private Business Use, and

(4) The aggregate principal amount of all Tax-Exempt Obligations, including the Issue, issued or to be issued by the Issuer, its subordinate entities and entities that issue any such obligations on behalf of the Issuer, or on behalf of which the Issuer issues any such obligations, during the current calendar year does not, and is not reasonably expected to, exceed $5,000,000. The Tax-Exempt Obligations taken into account for this purpose exclude any Private Activity Bonds and any Current Refunding Portion and Current Refunding Issue to the extent that the amount of such Current Refunding Portion or Current Refunding Issue does not exceed the outstanding amount of the obligations refunded by such Current Refunding Portion or Current Refunding Issue. No entity has been or will be formed or availed of to avoid the purposes of Section 148(f)(4)(D)(i)(IV).

If, but only if, all of the above requirements are satisfied, check here: [____]

and sign here: _____

(B) General Exception. Notwithstanding the foregoing, the computations and payments of amounts to the United States referred to in IV need not be made to the extent that the Issuer will not thereby fail to comply with any requirements of Section 148(f) and the Instructions based on an opinion of bond counsel.

4.40. Election. The Issue is a Construction Issue. The Issuer hereby elects to apply the 2-year spending exception to the rebate requirements on the basis of actual facts instead of the Issuer's reasonable expectations.

V. OTHER TAX MATTERS

5.10. Not Private Activity Bonds or Pool Bonds. No obligation of the Issue will be a Private Activity Bond or a pooled financing bond (within the meaning of Section 149(f)), based on the following:

(A) Not more than 5% of the Proceeds, if any, directly or indirectly, will be used for a Private Business Use and not more than 5%, if any, of the Debt Service on the Issue, directly or indirectly, will be secured by any interest in property used or to be used for a Private Business Use or payments in respect of such property, or will be derived from payments (whether or not to the Issuer) in respect of property, or borrowed money, used or to be used for a Private Business Use.

(B) Less than 5% of the Proceeds, if any, will be used to make or finance loans to any Private Person or Governmental Unit other than the Issuer.

(C) The lesser of the Proceeds that are being or will be used for any Private Business Use or the Proceeds with respect to which there are payments or (borrowed money) that are being or will be used for any Private Business Use does not exceed $15,000,000 and none of the Proceeds will be used with respect to an "output facility" (other than a facility for the furnishing of water) within the meaning of Section 141(b)(4).

(D) The Issuer does not expect to sell or otherwise dispose of the Project or any portion thereof during the term of the Issue except for dispositions of property in the normal course at the end of such property's useful life to the Issuer. With respect to tangible personal property, if any, that is part of the Project, the Issuer reasonably expects that:

(1) Dispositions of such tangible personal property, if any, will be in the ordinary course of an established governmental program;

(2) The weighted average maturity of the obligations of the Issue financing such property (treating the obligations of the Issue properly allocable to such personal property as a separate issue for this purpose) will not be greater than 120% of the reasonably expected actual use of such property for governmental purposes;

(3) The fair market value of such property on the date of disposition will not be greater than 25% of its cost;

(4) The property will no longer be suitable for its governmental purposes on the date of disposition; and

(5) The amounts received from any disposition of such property are required to be, and will be, commingled with substantial tax or other governmental revenues and will be spent on governmental programs within 6 months from the date of such deposit and commingling.

5.20. Issue Not Federally Guaranteed. The Issue is not Federally Guaranteed.

5.30. Not Hedge Bonds. At least 85% of the Spendable Proceeds will be used to carry out the governmental purposes of the Issue within three years from the Issuance Date. Not more than 50%, if any, of the Proceeds will be invested in Nonpurpose Investments having a substantially guaranteed Yield for four years or more (including but not limited to any investment contract or fixed yield investment having a maturity of four years or more). The reasonable expectations stated above are not based on and do not take into account (A) any expectations or assumptions as to the occurrence of changes in market interest rates or changes of federal tax law or regulations or rulings thereunder or (B) any prepayments of items other than items that are customarily prepaid.

5.40. Hedge Contracts. The Issuer has not entered into, and does not reasonably expect to enter into, any Hedge with respect to the Issue, or any portion thereof. The Issuer acknowledges that entering into a Hedge with respect to the Issue, or any portion thereof, may change the Yield and that Bond Counsel should be contacted prior to entering into any Hedge with respect to the Issue in order to determine whether payments/receipts pursuant to the Hedge will be taken into account in computing the Yield.

5.50. Internal Revenue Service Information Return. Within the time and on the form prescribed by the Internal Revenue Service under Section 149(e), the Issuer will file with the Internal Revenue Service an Information Return setting forth the required information relating to the Issue. The information reported on that Information Return will be true, correct, and complete to the best of the knowledge and belief of the undersigned.

5.60. Responsibility of Officer.

(A) The officer signing this Certificate is one of the officers of the Issuer responsible for issuing the Issue.

(B) To the best of the knowledge, information, and belief of the undersigned, all expectations stated in this Certificate are the expectations of the Issuer and are reasonable, all facts stated are true, and there are no other existing facts, estimates, or circumstances that would or could materially change the statements made in this Certificate. The certifications and representations made in this Certificate are intended to be relied upon as certifications described in Regulations § 1.148-2(b). The Issuer acknowledges that any change in the facts or expectations from those set forth in this Certificate may result in different requirements or a change in status of the Issue or interest thereon under the Code, and that bond counsel should be contacted if such changes are to occur or have occurred.

City of Surprise

By:_____
Name:_____
Title:_____

List of Attachments

Attachment A -- Definitions for Tax Compliance Certificate

Attachment A-1 -- Rebate Instructions

Attachment A

Definitions for Tax Compliance Certificate of Local Borrower

The following terms, as used in Attachment A and in the Tax Compliance Certificate to which it is attached and in the other Attachments to the Tax Compliance Certificate, have the following meanings unless therein otherwise defined or unless a different meaning is indicated by the context in which the term is used. Capitalized terms used within these definitions that are not defined in Attachment A have the meanings ascribed to them in the Tax Compliance Certificate to which this Attachment A is attached. The word "Issue," in lower case, refers either to the Issue or to another issue of obligations or portion thereof treated as a separate issue for the applicable purposes of Section 148, as the context requires. The word "obligation" or "obligations," in lower case, includes any obligation, whether in the form of bonds, notes, certificates, or any other obligation that is a "bond" within the meaning of Section 150(a)(1). All capitalized terms used in this Certificate include either the singular or the plural. All terms used in this Attachment A or in the Tax Compliance Certificate to which this Attachment A is attached, including terms specifically defined, shall be interpreted in a manner consistent with Sections 103 and 141-150 and the applicable Regulations thereunder except as otherwise specified. All references to Section, unless otherwise noted, refer to the Code.

"Advance Refunding Issue" means any Refunding Issue that is not a Current Refunding Issue.

"Advance Refunding Portion" means that portion of a Multipurpose Issue that constitutes a separate governmental purpose and that would be treated as an Advance Refunding Issue if it had been issued as a separate issue.

"AMT Obligation" means a Tax-Exempt Obligation the interest on which is an item of tax preference for purposes of the alternative minimum tax imposed on individuals and corporations under the Internal Revenue Code.

"Available Construction Proceeds" means an amount equal to (a) the sum of (i) the Issue Price of an issue, (ii) Investment Proceeds on that Issue Price, (iii) earnings on any reasonably required reserve or replacement fund allocable to the issue not funded from the Issue Price, and (iv) Investment Proceeds and earnings on (ii) and (iii), (b) reduced by the portions, if any, of the Issue Price of the issue (i) attributable to Pre-Issuance Accrued Interest and earnings thereon, (ii) allocable to the underwriter's discount, (iii) used to pay other Issuance Costs of the issue, and (iv) deposited in a reasonably required reserve or replacement fund allocable to the issue. "Available Construction Proceeds" does not include Investment Proceeds or earnings on a reasonably required reserve or replacement fund allocable to the issue for any period after the earlier of (a) the close of the 2-year period that begins on the Issuance Date or (b) the date the construction of the project financed by the issue is substantially completed, provided, however, that such Investment Proceeds or earnings shall be excluded from "Available Construction Proceeds" if the Issuer has timely elected such exclusion. If an issue is a Multipurpose Issue that includes a New Money Portion that is a Construction Issue, this definition shall be applied by substituting "New Money Portion" for "issue" each place the latter term appears. If an issue or the New Money Portion of a Multipurpose Issue, as applicable, is

not a Construction Issue, and the Issuer makes the bifurcation election under Regulations §1.148-7(j)(1) and Section 148(f)(4)(C)(v) to treat the issue or the New Money Portion as two separate issues consisting of the Construction Portion and the Nonconstruction Portion, this definition shall be applied by substituting "Construction Portion" for "issue" each place the latter term appears.

"Bona Fide Debt Service Fund" means a fund, including a portion of or an account in that fund (or in the case of a fund established for two or more issues, the portion of that fund properly allocable to an issue), or a combination of such funds, accounts or portions that is used primarily to achieve a proper matching of revenues with Debt Service on an issue within each Bond Year and that is depleted at least once each year except for a reasonable carryover amount not to exceed the greater of the earnings thereon for the immediately preceding Bond Year or one-twelfth of the annual Debt Service on the issue for the immediately preceding Bond Year.

"Bond Year" means the annual period relevant to the application of Section 148(f) to an issue, except that the first and last Bond Years may be less than 12 months long. The last day of a Bond Year shall be the close of business on the day preceding the anniversary of the Issuance Date of an issue unless the Issuer selects another date on which to end a Bond Year in the manner permitted by the Code.

"Capital Expenditures" means costs of a type that are properly chargeable to a capital account (or would be so chargeable with a proper election or with the application of the definition of Placed in Service) under general federal income tax principles.

"Code" means the Internal Revenue Code of 1986, the Regulations (whether temporary or final) under that Code or the statutory predecessor of that Code, and any amendments of, or successor provisions to, the foregoing and any official rulings, announcements, notices, procedures and judicial determinations regarding any of the foregoing, all as and to the extent applicable. Unless otherwise indicated, reference to a Section includes any applicable successor section or provision and such applicable Regulations, rulings, announcements, notices, procedures and determinations pertinent to that Section.

"Commingled Fund" means any fund or account of the Issuer that contains both Gross Proceeds of an issue and amounts in excess of $25,000 that are not Gross Proceeds of the issue if the amounts in the fund or account are invested and accounted for collectively, without regard to the source of funds deposited in the fund or account.

"Commingled Investment Proceeds" means Investment Proceeds of an issue (other than Investment Proceeds held in a Refunding Escrow) that are deposited in a Commingled Fund with substantial tax or other revenues from governmental operations of the Issuer and that are reasonably expected to be spent for governmental purposes within 6 months from the date of deposit in the Commingled Fund, using any reasonable accounting assumptions.

"Conduit Borrower" means the obligor on a purpose investment.

"Conduit Financing Issue" means an issue the Proceeds of which are reasonably expected to be used to finance one or more Conduit Loans.

"Conduit Loan" means a purpose investment acquired by the Issuer with Proceeds of a Conduit Financing Issue, thereby effecting a loan to the Conduit Borrower.

"Construction Expenditures" means Capital Expenditures allocable to the cost of real property (including the construction or making of improvements to real property, but excluding acquisitions of interests in land or other existing real property) or constructed personal property within the meaning of Regulations §1.148-7(g).

"Construction Issue" means an issue at least 75% of the Available Construction Proceeds of which are to be used for Construction Expenditures with respect to property that is, or upon completion will be, owned by a Governmental Unit or a 501(c)(3) Organization. If an issue is a Multipurpose Issue that includes a New Money Portion, this definition shall be applied by substituting "New Money Portion" for "Construction Issue" each place the latter term appears. If an election under Section 148(f)(4)(C)(v) and Regulations §1.148-7(j) is made to bifurcate an issue or the New Money Portion of a Multipurpose Issue, this definition shall be applied by substituting "Construction Portion" for "Construction Issue" each place the latter term appears.

"Construction Portion" means that portion of an issue or the New Money Portion of a Multipurpose Issue at least 75% of the Available Construction Proceeds of which are to be used for Construction Expenditures with respect to property that is, or upon completion will be, owned by a Governmental Unit or a 501(c)(3) Organization and that finances 100% of the Construction Expenditures.

"Controlled Group" means a group of entities controlled directly or indirectly by the same entity or group of entities within the meaning of Regulations §1.150-1(e).

"Current Refunding Issue" means a Refunding Issue that is issued not more than 90 days before the last expenditure of any Proceeds of the Refunding Issue for the payment of Debt Service on the Refunded Bonds.

"Current Refunding Portion" means that portion of a Multipurpose Issue that constitutes a separate governmental purpose and that would be treated as a Current Refunding Issue if it had been issued as a separate issue.

"Debt Service" means principal of and interest and any redemption premium on an issue.

"Excess Gross Proceeds" means all Gross Proceeds of an Advance Refunding Issue that exceed an amount equal to 1% of the Sale Proceeds of such Advance Refunding Issue, other than Gross Proceeds allocable to: (a) payment of Debt Service on the Refunded Bonds; (b) payment of Pre-Issuance Accrued Interest on the Advance Refunding Issue and interest on the Advance Refunding Issue that accrues for a period up to the completion date of any capital project financed by the Prior Issue, plus one year; (c) a reasonably required reserve or replacement fund for the

Advance Refunding Issue or Investment Proceeds of such fund; (d) payment of Issuance Costs of the Advance Refunding Issue; (e) payment of administrative costs allocable to repaying the Refunded Bonds, carrying and repaying the Advance Refunding Issue, or investments of the Advance Refunding Issue; (f) Transferred Proceeds allocable to expenditures for the governmental purpose of the Prior Issue (treating for this purpose all unspent Proceeds of the Prior Issue properly allocable to the Refunded Bonds as of the Issuance Date of the Advance Refunding Issue as Transferred Proceeds); (g) interest on purpose investments; (h) Replacement Proceeds in a sinking fund for the Advance Refunding Issue; and (i) fees for a Qualified Guarantee for the Advance Refunding Issue or the Prior Issue. If an Issue is a Multipurpose Issue that includes an Advance Refunding Portion, this definition shall be applied by substituting "Advance Refunding Portion" for "Advance Refunding Issue" each place the latter term appears.

"Federally Guaranteed" means that (a) the payment of Debt Service on an issue, or the payment of principal or interest with respect to any loans made from the Proceeds of the issue, is directly or indirectly guaranteed in whole or in part by the United States or by an agency or instrumentality of the United States, within the meaning of Section 149(b) of the Code, or (b) more than 5% of the Proceeds of an issue will be invested directly or indirectly in federally insured deposits or accounts. The preceding sentence does not apply to (a) Proceeds invested during an initial Temporary Period until such Proceeds are needed to pay costs of the project, (b) investments of a Bona Fide Debt Service Fund, (c) direct purchases from the United States of obligations issued by the United States Treasury, or (d) other investments permitted by Section 149(b) or Regulations §1.149(b)-1(b).

"501(c)(3) Organization" means an organization described in Section 501(c)(3) and exempt from tax under Section 501(a).

"Fixed Yield Issue" means an issue of obligations the Yield on which is fixed and determinable on the Issuance Date.

"Governmental Unit" means a state, territory or possession of the United States, the District of Columbia, or any political subdivision thereof referred to as a "State or local governmental unit" in Regulations §1.103-1(a). "Governmental Unit" does not include the United States or any agency or instrumentality of the United States.

"Gross Proceeds" means Proceeds and Replacement Proceeds of an issue.

"Hedge" means a contract entered into by the Issuer or the Conduit Borrower primarily to modify the Issuer's or the Conduit Borrower's risk of interest rate changes with respect to an obligation (e.g., an interest rate swap, an interest rate cap, a futures contract, a forward contract or an option).

"Higher Yielding Investments" means any Investment Property that produces a Yield that (a) in the case of Investment Property allocable to Replacement Proceeds of an issue and Investment Property in a Refunding Escrow, is more than one thousandth of one percentage point (.00001) higher than the Yield on the applicable issue, and (b) for all other purposes is more than one-eighth of one percentage point (.00125) higher than the Yield on the issue.

"Investment Proceeds" means any amounts actually or constructively received from investing Proceeds of an issue in Investment Property.

"Investment Property" means investment property within the meaning of Sections 148(b)(2) and 148(b)(3), including any security (within the meaning of Section 165(g)(2)(A) or (B)), any obligation, any annuity contract and any other investment-type property (including certain residential rental property for family units as described in Section 148(b)(2)(E) in the case of any bond other than a Private Activity Bond). Investment Property includes a Tax-Exempt Obligation that is a "specified private activity bond" as defined in Section 57(a)(5)(C), but does not include other Tax-Exempt Obligations.

"Issuance Costs" means costs to the extent incurred in connection with, and allocable to, the issuance of an issue, and includes underwriter's compensation withheld from the Issue Price, counsel fees, financial advisory fees, rating agency fees, trustee fees, paying agent fees, bond registrar, certification and authentication fees, accounting fees, printing costs for bonds and offering documents, public approval process costs, engineering and feasibility study costs, guarantee fees other than for a Qualified Guarantee and similar costs, but does not include fees charged by the Issuer.

"Issuance Date" means the date of physical delivery of an issue by the Issuer in exchange for the purchase price of the issue.

"Issue Price" means in the circumstances applicable to an issue:

(1) Public Offering. In the case of obligations actually offered to the general public in a bona fide public offering at the initial offering price for each maturity set forth in the certificate of the underwriter or placement agent attached to the Tax Compliance Certificate of the Issuer, the aggregate of the initial offering price for each maturity (including any Pre-Issuance Accrued Interest and original issue premium, but excluding any original issue discount), which price is not more than the fair market value thereof as of the Sale Date, and at which initial offering price not less than 10% of the principal amount of each maturity, as of the Sale Date, was sold or reasonably expected to be sold (other than to bond houses, brokers or other intermediaries). In the case of publicly offered obligations that are not described in the preceding sentence, Issue Price means the aggregate of the initial offering price to the public of each maturity set forth in the certificate of the underwriter or placement agent attached to the Tax Compliance Certificate of the Issuer, which price is not more than the fair market value thereof as of the Sale Date, and at which initial offering price not less than 10% of the principal amount of each maturity was sold to the public.

(2) Private Placement. In the case of obligations sold by private placement, the aggregate of the prices (including any Pre-Issuance Accrued Interest and original issue premium, but excluding any original issue discount) paid to the

Issuer by the first purchaser(s) (other than bond houses, brokers or other intermediaries).

"Minor Portion" means an amount equal to the lesser of $100,000 or 5% of the Sale Proceeds of an issue.

"Multipurpose Issue" means an issue the bonds of which are allocable to two or more separate governmental purposes within the meaning of Regulations §1.148-9(h).

"Net Proceeds" means the Sale Proceeds of an issue less the portion thereof, if any, deposited in a reasonably required reserve or replacement fund for the issue.

"Net Sale Proceeds" means the Sale Proceeds of an issue less the portion thereof, if any, deposited in a reasonably required reserve or replacement fund for the issue and the portion invested as a part of a Minor Portion for the issue.

"New Money Issue" means an issue that is not a Refunding Issue.

"New Money Portion" means that portion of a Multipurpose Issue other than the Refunding Portion.

"Nonpurpose Investments" means any Investment Property that is acquired with Gross Proceeds as an investment and not in carrying out any governmental purpose of an issue. "Nonpurpose Investments" does not include any investment that is not regarded as "investment property" or a "nonpurpose investment" for the particular purposes of Section 148 (such as certain investments in U.S. Treasury obligations in the State and Local Government Series and certain temporary investments), but does include any other investment that is a "nonpurpose investment" within the applicable meaning of Section 148.

"Placed in Service" means the date on which, based on all the facts and circumstances, a facility has reached a degree of completion that would permit its operation at substantially its design level and the facility is, in fact, in operation at such level.

"Pre-Issuance Accrued Interest" means interest on an obligation that accrued for a period not greater than one year before its Issuance Date and that will be paid within one year after such Issuance Date.

"Preliminary Expenditures" means any Capital Expenditures that are "preliminary expenditures" within the meaning of Regulations §1.150-2(f)(2), i.e., architectural, engineering, surveying, soil testing, reimbursement bond issuance, and similar costs that are incurred prior to commencement of acquisition, construction, or rehabilitation of a project other than land acquisition, site preparation, and similar costs incident to commencement of construction. The aggregate amount of Preliminary Expenditures may not exceed 20% of the aggregate Issue Price of the issue or issues that financed or are reasonably expected to finance the project for which such Preliminary Expenditures are or were incurred.

"Prior Issue" means an issue of obligations all or a portion of the Debt Service on which is paid or provided for with Proceeds of a Refunding Issue. The Prior Issue may be a Refunding Issue.

"Private Activity Bond" means (a) obligations of an issue more than 10% of the Proceeds of which, directly or indirectly, are or are to be used for a Private Business Use and more than 10% of the Debt Service on which, directly or indirectly, is or is to be paid from or secured by payments with respect to property, or secured by property, used for a Private Business Use, or (b) obligations of an issue, the Proceeds of which are or are to be used to make or finance loans to any Private Person that, in the aggregate, exceed the lesser of 5% of such Proceeds or $5,000,000. In the event of Unrelated or Disproportionate Use, the tests in (a) shall be applied by substituting 5% for 10% each place the latter term is used.

"Private Business Use" means use (directly or indirectly) in a trade or business carried on by any Private Person other than use as a member of, and on the same basis as, the general public. Any activity carried on by a Private Person (other than a natural person) shall be treated as a trade or business. In the case of a Qualified 501(c)(3) Bond, Private Business Use excludes use by a 501(c)(3) Organization that is not an unrelated trade or business activity by such 501(c)(3) Organization within the meaning of Section 513(a).

"Private Person" means any natural person or any artificial person, including a corporation, partnership, trust or other entity, other than a Governmental Unit. "Private Person" includes the United States and any agency or instrumentality of the United States.

"Proceeds" means any Sale Proceeds, Investment Proceeds, and Transferred Proceeds of an issue. "Proceeds" does not include Replacement Proceeds.

"Qualified Administrative Costs" means reasonable direct administrative costs (other than carrying costs) such as separately stated brokerage or selling commissions, but not legal and accounting fees, recordkeeping, custody and similar costs. General overhead costs and similar indirect costs of the Issuer such as employee salaries and office expenses and costs associated with computing the Rebate Amount are not Qualified Administrative Costs.

"Qualified 501(c)(3) Bonds" means an issue of obligations that satisfies the requirements of Section 145(a).

"Qualified Guarantee" means any guarantee of an obligation that constitutes a "qualified guarantee" within the meaning of Regulations §1.148-4(f).

"Qualified Hedge" means a Hedge that is a "qualified hedge" within the meaning of Regulations §1.148-4(h)(2).

"Rebate Amount" means the excess of the future value, as of any date, of all receipts on Nonpurpose Investments acquired with Gross Proceeds of an issue over the future value, as of that date, of all payments on those Nonpurpose Investments, computed in accordance with Section 148(f) and Regulations §1.148-3.

"Refunded Bonds" means obligations of a Prior Issue the Debt Service on which is or is to be paid from Proceeds of a Refunding Issue.

"Refunding Bonds" means obligations of a Refunding Issue.

"Refunding Issue" means an issue the Proceeds of which are or are to be used to pay Debt Service on Refunded Bonds and includes Issuance Costs, Pre-Issuance Accrued Interest or permitted capitalized interest, a reasonably required reserve or replacement fund and similar costs of the Refunding Issue.

"Refunding Escrow" means one or more funds established as part of a single transaction, or a series of related transactions, containing Proceeds of a Refunding Issue and any other amounts to be used to pay Debt Service on Refunded Bonds of one or more issues.

"Refunding Portion" means that portion of a Multipurpose Issue the Proceeds of which are, or are to be, used to pay Debt Service on Refunded Bonds and includes Issuance Costs, Pre-Issuance Accrued Interest or permitted capitalized interest, a reasonably required reserve or replacement fund and similar costs properly allocable to the Refunding Portion.

"Regulations" or "Reg." means Treasury Regulations.

"Reimbursement Allocation" means an allocation of the Proceeds of an issue for the Reimbursement of Prior Capital Expenditures, other than Preliminary Expenditures, that meets each of the following requirements: (a) is evidenced on the books or records of the Issuer maintained with respect to the issue, (b) the allocation entry identifies either actual prior Capital Expenditures, or the fund or account from which the prior Capital Expenditures were paid, and (c) evidences the Issuer's use of Proceeds of the issue to reimburse a Capital Expenditure for a governmental purpose that was originally paid from a source other than the Proceeds of the issue.

"Reimbursement of Prior Capital Expenditures" means a Reimbursement Allocation of Proceeds of the Issue to a Capital Expenditure paid prior to the Issuance Date of such Issue, that satisfies the following requirements: (a) the Capital Expenditure was paid after March 1, 1992; (b) prior to, or within 60 days after, payment of the Capital Expenditure (except Preliminary Expenditures), the Issuer adopted an official intent for the Capital Expenditure that satisfies Regulations §1.150-2(e); and (c) except for Preliminary Expenditures, the Reimbursement Allocation occurs or will occur within 18 months after the later of the date the Capital Expenditure was paid or the date the project resulting from such Capital Expenditure was Placed in Service or abandoned, but in no event more than 3 years after the Capital Expenditure was paid.

"Related Party" means, in reference to a Governmental Unit or 501(c)(3) Organization, any member of the same Controlled Group and, in reference to any person that is not a Governmental Unit or 501(c)(3) Organization, a "related person" as defined in Section 144(a)(3) of the Code.

"Replacement Proceeds" means, with respect to an issue, amounts (including any investment income, but excluding any Proceeds of any issue) replaced by Proceeds of that issue within the meaning of Section 148(a)(2). "Replacement Proceeds" includes amounts, other than Proceeds, held in a sinking fund, pledged fund or reserve or replacement fund for an issue.

"Sale Date" means, with respect to an issue, the first date on which there is a binding contract in writing with the Issuer for the sale and purchase of an issue (or of respective obligations of the issue if sold by the Issuer on different dates) on specific terms that are not later modified or adjusted in any material respect.

"Sale Proceeds" means that portion of the Issue Price actually or constructively received by the Issuer upon the sale or other disposition of an issue, including any underwriter's compensation withheld from the Issue Price, but excluding Pre-Issuance Accrued Interest.

"Spendable Proceeds" means the Net Sale Proceeds of an issue.

"Tax-Exempt Obligation" means any obligation or issue of obligations (including bonds, notes and lease obligations treated for federal income tax purposes as evidences of indebtedness) the interest on which is excluded from gross income for federal income tax purposes within the meaning of Section 150, and includes any obligation or any investment treated as a "tax-exempt bond" for the applicable purpose of Section 148.

"Tax-Exempt Organization" means a Governmental Unit or a 501(c)(3) Organization.

"Temporary Period" means the period of time, as set forth in the Tax Compliance Certificate, applicable to particular categories of Proceeds of an issue during which such category of Proceeds may be invested in Higher Yielding Investments without the issue being treated as arbitrage bonds under Section 148.

"Transferred Proceeds" means that portion of the Proceeds of an issue (including any Transferred Proceeds of that issue) that remains unexpended at the time that any portion of the principal of the Refunded Bonds of that issue is discharged with the Proceeds of a Refunding Issue and that thereupon becomes Proceeds of the Refunding Issue as provided in Regulations §1.148-9(b). "Transferred Proceeds" does not include any Replacement Proceeds.

"Unrelated or Disproportionate Use" means Private Business Use that is not related to or is disproportionate to use by a Governmental Unit within the meaning of Section 141(b)(3) and Regulations §1.141-9.

"Variable Yield Issue" means any Issue that is not a Fixed Yield Issue.

"Working Capital Expenditures" means any costs of a type that do not constitute Capital Expenditures, including current operating expenses.

"Yield" has the meaning assigned to it for purposes of Section 148 of the Code, and means that discount rate (stated as an annual percentage) that, when used in computing the present worth of all applicable unconditionally payable payments of Debt Service, all payments for a Qualified Guarantee, if any, and all payments and receipts with respect to a Qualified Hedge, if any, paid and to be paid with respect to an obligation (paid and to be paid during and attributable to the Yield Period in the case of a Variable Yield Issue), produces an amount equal to (a) the Issue Price in the case of a Fixed Yield Issue or the present value of the Issue Price at the commencement of the applicable Yield Period in the case of a Variable Yield Issue, or (b) the purchase price for yield purposes in the case of Investment Property, all subject to the applicable methods of computation provided for under Section 148, including variations from the foregoing. The Yield on Investment Property in which Proceeds or Replacement Proceeds of an issue are invested is computed on a basis consistent with the computation of Yield on that issue, including the same compounding interval of not more than one year selected by the Issuer.

"Yield Period" means, in the case of the first Yield Period, the period that commences on the Issuance Date and ends at the close of business on the first Computation Date and, in the case of each succeeding Yield Period, the period that begins immediately after the end of the immediately preceding Yield Period and ends at the close of business on the next succeeding Computation Date.

The terms "bond", "obligation", "reasonably required reserve or replacement fund", "reserve or replacement fund", "loan", "sinking fund", "purpose investment", "same plan of financing", "other replacement proceeds", and other terms relating to Code provisions used but not defined in this Certificate shall have the meanings given to them for purposes of Sections 103 and 141 to 150 unless the context indicates another meaning.

(End of Attachment A)

ATTACHMENT A-1
to
Tax Compliance Certificate of Local Borrower

INSTRUCTIONS FOR COMPLIANCE WITH REBATE REQUIREMENTS OF SECTION 148(f) OF THE CODE.

The Issuer covenanted in the Loan Agreement and Tax Compliance Certificate to comply with the arbitrage rebate requirement of Section 148(f) of the Code. These Instructions provide guidance for that compliance, including the spending exceptions that free the Issue from all or part of the rebate requirements.

PART I: GENERAL

SECTION 1.01. REBATE GENERALLY.

The Rebate Amount[1] with respect to the Issue must be paid (rebated) to the United States to prevent the bonds of the Issue from being arbitrage bonds, the interest on which is subject to federal income tax. In general, the Rebate Amount is the amount by which the actual earnings on Nonpurpose Investments purchased (or deemed to have been purchased) with Gross Proceeds of the Issue exceed the amount of earnings that would have been received if those Nonpurpose Investments had a Yield equal to the Yield on the Issue.[2]

Stated differently, the Rebate Amount for the Issue as of any date is the excess of the Future Value, as of that date, of all Receipts on Nonpurpose Investments over the Future Value, as of that date, of all Payments on Nonpurpose Investments, computed using the Yield on the Issue as the Future Value rate.[3]

If the Issue is a Fixed Yield Issue, the Yield on the Issue generally is the Yield to maturity, taking into account mandatory redemptions prior to maturity. If the Issue is a Variable Yield Issue, the Yield on the Issue is computed separately for each Yield Period selected by the Issuer.

SECTION 1.02. SPECIAL DEFINITIONS.

---

1. Capitalized terms that are not defined in these Instructions are defined in Attachment A to the Tax Compliance Certificate of the Issuer.

2. Amounts earned on the Bona Fide Debt Service Fund for the Issue are not taken into account in determining the Rebate Amount since none of the obligations of the Issue are Private Activity Bonds, the rates of interest on the Issue do not vary and the average maturity of the Issue is at least 5 years.

3. The scope of these Instructions does not permit a detailed description of the computation of the Rebate Amount with respect to the Issue. If you need assistance in computing the Rebate Amount on the Issue, please contact your bond counsel.

For purposes of these Instructions, the following terms shall have the following meanings.

"Available Construction Proceeds" means an amount equal to (a) the sum of (i) the Issue Price of the issue, (ii) Investment Proceeds on that Issue Price, (iii) earnings on any reasonably required reserve or replacement fund allocated to the issue not funded from the Issue Price, and (iv) Investment Proceeds and earnings on (ii) and (iii), (b) reduced by the portions, if any, of the Issue Price of the issue (i) attributable to Pre-Issuance Accrued Interest and earnings thereon, (ii) allocated to the Underwriter's discount, (iii) used to pay other Issuance Costs of the issue, and (iv) deposited in a reasonably required reserve or replacement fund allocated to the issue. Available Construction Proceeds do not include Investment Proceeds or earnings on a reasonably required reserve or replacement fund allocated to the issue for any period after the earlier of (a) the close of the 2-year period that begins on the Issuance Date or (b) the date the construction of the Projects financed by the issue is substantially completed. If the issue consists of a New Money Portion and a Refunding Portion and the New Money Portion is a Construction Issue, this definition shall be applied by substituting "New Money Portion" for "issue" each place the latter term appears. If the issue or the New Money Portion, as applicable, is not a Construction Issue, and the Issuer makes the election under Regulations §1.148-7(j)(1) and Section 148(f)(4)(C)(v) to treat the issue or the New Money Portion as two separate issues consisting of the Construction Portion and the Nonconstruction Portion, this definition shall be applied by substituting "Construction Portion" for "issue" each place the latter term appears.

"Bifurcated Issue" means a New Money Issue or the New Money Portion of a Multipurpose Issue that the Issuer, pursuant to Section 148(f)(4)(C)(v) and Regulations §1.148-7(j), has elected in its Tax Compliance Certificate to bifurcate into a Construction Portion and a Nonconstruction Portion.

"Bond Counsel's Opinion" means an opinion or opinions of a nationally recognized bond counsel firm whose opinion is given with respect to the Issue when issued, or its successors or other nationally recognized bond counsel appointed by the Issuer.

"Bond Year" means the annual period relevant to the application of Section 148(f) to the issue, except that the first and last Bond Years may be less than 12 months long. The last day of a Bond Year shall be the close of business on the day preceding the anniversary of the Issuance Date of the issue unless the Issuer selects another date on which to end a Bond Year in the manner permitted by the Code.

"Computation Date" means each date on which the Rebate Amount for an issue is required to be computed under Regulations §1.148-3(e). In the case of a Fixed Yield Issue, the first Computation Date shall not be later than 5 years after the Issuance Date of the issue. Subsequent Computation Dates shall be not later than 5 years after the immediately preceding Computation Date for which an installment payment of the Rebate Amount was paid. In the case of a Variable Yield Issue, the first Computation Date shall be the last day of any Bond Year irrevocably selected by the Issuer ending on or before the fifth anniversary of the Issuance Date of such issue and

subsequent Computation Dates shall be the last day of each Bond Year thereafter or each fifth Bond Year thereafter, whichever is irrevocably selected by the Issuer after the first date on which any portion of the Rebate Amount is required to be paid to the United States. The final Computation Date is the date an issue is retired.

"Construction Expenditures" means Capital Expenditures allocable to the cost of real property (including the construction or making of improvements to real property, but excluding acquisitions of interests in land or other existing real property) or constructed personal property within the meaning of Regulations §1.148-7(g).

"Construction Issue" means an issue at least 75 percent of the Available Construction Proceeds of which are to be used for Construction Expenditures with respect to property which is or is to be owned by a Governmental Unit or a 501(c)(3) Organization. If an election has been made in the Issuer's Tax Compliance Certificate to bifurcate an issue or the New Money Portion, the Construction Portion (i.e., that portion of the issue or the New Money Portion which satisfies the 75 percent test stated in the preceding sentence and which finances 100% of the Construction Expenditures) is treated as the Construction Issue and the balance of the issue or the New Money Portion is treated as the Nonconstruction Portion.

"Fixed Yield Issue" means an issue of obligations the Yield on which is fixed and determinable on the Issuance Date.

"Future Value" means the value of a Payment or Receipt at the end of a period determined using the economic accrual method as the value of that Payment or Receipt when it is paid or received (or treated as paid or received), plus interest assumed to be earned and compounded over the period at a rate equal to the Yield on the Issue, using the same compounding interval and financial conventions that were used to compute that Yield.

"Guaranteed Investment Contract" means any Nonpurpose Investment that has specifically negotiated withdrawal or retirement provisions and a specifically negotiated interest rate and any agreement to supply investments on two or more future dates (e.g., a forward supply contract).

"Multipurpose Issue" means an issue that consists of a Refunding Portion and a New Money Portion.

"Payment" means payments actually or constructively made to acquire Nonpurpose Investments, as specified in Regulations §1.148-3(d)(1)i) through (v).

"Qualified Administrative Costs" means the reasonable, direct administrative costs, other than carrying costs, of purchasing or selling Nonpurpose Investments such as separately stated brokerage or selling commissions. Qualified Administrative Costs do not include legal and accounting fees, recordkeeping, custody, and similar costs, general overhead costs and similar indirect costs of the Issuer such as employee salaries and office expenses and costs associated with computing the Rebate Amount. In general, Qualified Administrative Costs are not reasonable unless they are comparable to administrative costs that would be charged for the same investment or

a reasonably comparable investment if acquired with a source of funds other than Gross Proceeds of Tax-Exempt Obligations.

"Reasonable Retainage" means an amount, not to exceed 5% of the Net Sale Proceeds of the Issue, that is retained for reasonable business purposes relating to the property financed with Proceeds of the Issue. For example, Reasonable Retainage may include a retention to ensure or promote compliance with a construction contract in circumstances in which the retained amount is not yet payable, or in which the Issuer reasonably determines that a dispute exists regarding completion or payment.

"Rebate Analyst" means an independent individual, firm or entity experienced in the computation of the Rebate Amount pursuant to Section 148(f) of the Code.

"Receipt" means amounts actually or constructively received from Nonpurpose Investments as specified in Regulations §1.148-3(d)(2)(i) through (iii).

"Variable Yield Issue" means any issue that is not a Fixed Yield Issue.

"Yield Period" means, in the case of the first Yield Period, the period that commences on the Issuance Date and ends at the close of business on the first Computation Date and, in the case of each succeeding Yield Period, the period that begins immediately after the end of the immediately preceding Yield Period and ends at the close of business on the next succeeding Computation Date.

PART II: EXCEPTIONS TO REBATE

SECTION 2.01. SPENDING EXCEPTIONS.

The rebate requirements with respect to the Issue are deemed to have been satisfied if any one of three spending exceptions (the 6-Month, the 18-Month, or the 2-Year Spending Exception, collectively, the "Spending Exceptions") is satisfied. The Spending Exceptions are each independent exceptions. The Issue need not meet the requirements of any other exception in order to use any one of the three exceptions. For example, a Construction Issue may qualify for the 6-Month Spending Exception or the 18-Month Spending Exception even though the Issuer makes one or more elections under the 2-Year Exception with respect to the Issue.

The following rules apply for purposes of all of the Spending Exceptions except as otherwise noted.

Refunding Issues. The only spending exception available for a Refunding Issue[4] is the 6-Month Spending Exception.

---

4. For purposes of these Instructions, references to "Refunding Issue" include the Refunding Portion of a Multipurpose Issue.

Special Transferred Proceeds Rules. In applying the Spending Exceptions to a Refunding Issue, unspent Proceeds of the Prior Issue that become Transferred Proceeds of the Refunding Issue are ignored. If the Prior Issue satisfies one of the rebate Spending Exceptions, the Proceeds of the Prior Issue that are excepted from rebate under that exception are not subject to rebate either as Proceeds of the Prior Issue or as Transferred Proceeds of the Refunding Issue.

However, if the Prior Issue does not satisfy any of the Spending Exceptions and is not otherwise exempt from rebate, the Transferred Proceeds from the Prior Issue will be subject to rebate, even if the Refunding Issue satisfies the 6-Month Spending Exception. The Rebate Amount will be calculated on the Transferred Proceeds on the basis of the Yield of the Prior Issue up to each transfer date and on the basis of the Yield of the Refunding Issue after each transfer date.

Application of Spending Exceptions to a Multipurpose Issue. If the Issue is a Multipurpose Issue, the Refunding Portion and the New Money Portion are treated for purposes of the rebate Spending Exceptions as separate issues. Thus, the Refunding Portion is eligible to use only the 6-Month Spending Exception. The New Money Portion is eligible to use any of the three Spending Exceptions.

Expenditures for Governmental Purposes of the Issue. Each of the spending exceptions requires that expenditures of Gross Proceeds be for the governmental purposes of the Issue. These purposes include payment of interest (but not principal) on the Issue.

SECTION 2.02. 6-MONTH SPENDING EXCEPTION.

The Issue will be treated as satisfying the rebate requirements if all of the Gross Proceeds of the Issue are allocated to expenditures for the governmental purposes of the Issue within the 6-month period beginning on the Issuance Date and the Rebate Amount, if any, with respect to earnings on amounts deposited in a reasonably required reserve or replacement fund or a Bona Fide Debt Service Fund if and to the extent that such Fund is subject to rebate (see footnote 3) is timely paid to the United States. If no bond of the Issue is a Private Activity Bond (other than a Qualified 501(c)(3) Bond) or a tax or revenue anticipation bond, the 6-month period is extended for an additional 6 months if the unexpended Gross Proceeds of the Issue at the end of the 6-month period do not exceed the lesser of 5% of the Proceeds of the Issue or $100,000.

For purposes of the 6-Month Spending Exception, Gross Proceeds required to be spent within 6 months do not include amounts in a reasonably required reserve or replacement fund for the Issue or in a Bona Fide Debt Service Fund for the Issue.

SECTION 2.03. 18-MONTH SPENDING EXCEPTION.

The Issue (or the New Money Portion if the Issue is a Multipurpose Issue) is treated as satisfying the rebate requirement if the conditions set forth in (A), (B) and (C) are satisfied.

(A) All of the Gross Proceeds of the Issue (excluding amounts in a reasonably required reserve or replacement fund for the Issue or in a Bona Fide Debt Service Fund for the Issue) are allocated to expenditures for the governmental purposes of the Issue in accordance with the following schedule, measured from the Issuance Date:

(1) at least 15% within 6 months;

(2) at least 60% within 12 months; and

(3) 100% within 18 months, subject to the Reasonable Retainage exception described below.

(B) The Rebate Amount, if any, with respect to earnings on amounts deposited in a reasonably required reserve or replacement fund or in a Bona Fide Debt Service Fund for the Issue, to the extent such Fund is subject to rebate (see footnote 3), is timely paid to the United States. And,

(C) The Gross Proceeds of the Issue qualify for the initial 3-year Temporary Period.

If the only unspent Gross Proceeds at the end of the 18th month are Reasonable Retainage, the requirement that 100% of the Gross Proceeds be spent by the end of the 18th month is treated as met if the Reasonable Retainage, and all earnings thereon, are spent for the governmental purposes of the Issue within 30 months of the Issuance Date.

For purposes of determining whether the spend-down requirements have been met as of the end of each of the first two spending periods, the amount of Investment Proceeds that the Issuer reasonably expects as of the Issuance Date to earn on the Sale Proceeds and Investment Proceeds of the Issue during the 18-month period are included in Gross Proceeds of the Issue. The final spend-down requirement includes actual Investment Proceeds for the entire 18 months.

The 18-Month Spending Exception does not apply to the Issue (or the New Money Portion, as applicable) if any portion of the Issue (or New Money Portion) is treated as meeting the rebate requirement under the 2-Year Spending Exception discussed below. This rule prohibits use of the 18-Month Spending Exception for the Nonconstruction Portion of a Bifurcated Issue. The only Spending Exception available for the Nonconstruction Portion of a Bifurcated Issue is the 6-Month Spending Exception.

SECTION 2.04. 2-YEAR SPENDING EXCEPTION FOR CERTAIN CONSTRUCTION ISSUES.

(A) In general. A Construction Issue no bond of which is a Private Activity Bond (other than a Qualified 501(c)(3) Bond or a Bond that finances property to be owned by a Governmental Unit or a 501(c)(3) Organization) is treated as satisfying the rebate requirement if the Available Construction Proceeds of the Issue are allocated to expenditures for the governmental purposes of the Issue in accordance with the following schedule, measured from the Issuance Date:

(1) at least 10% within 6 months;

(2) at least 45% within 1 year;

(3) at least 75% within 18 months; and

(4) 100% within 2 years, subject to the Reasonable Retainage exception described below.

Amounts in a Bona Fide Debt Service Fund or a reasonably required reserve or replacement fund for the Issue are not treated as Gross Proceeds for purposes of the expenditure requirements. However, unless the Issuer has elected otherwise in the Tax Compliance Certificate, earnings on amounts in a reasonably required reserve or replacement fund for the Issue are treated as Available Construction Funds during the 2-year period and therefore must be allocated to expenditures for the governmental purposes of the Issue.

If the Issuer elected in the Tax Compliance Certificate to exclude from Available Construction Proceeds the Investment Proceeds or earnings on a reasonably required reserve or replacement fund for the Issue during the 2-year spend-down period, the Rebate Amount, if any, with respect to such Investment Proceeds or earnings from the Issuance Date must be timely paid to the United States. If the election is not made, the Rebate Amount, if any, with respect to such Investment Proceeds or earnings after the earlier of the date construction is substantially completed or 2 years after the Issuance Date must be timely paid to the United States. The Rebate Amount, if any, with respect to earnings on amounts in a Bona Fide Debt Service Fund must be timely paid to the extent such Fund is subject to the rebate requirements (see footnote 3).

The Issue does not fail to satisfy the spending requirement for the fourth spend-down period (i.e., 100% within 2 years of the Issuance Date) if the only unspent Available Construction Proceeds are amounts for Reasonable Retainage if such amounts (together with all earnings on such amounts) are allocated to expenditures within 3 years of the Issuance Date.

For purposes of determining whether the spend-down requirements have been met as of the end of each of the first 3 spend-down periods, Available Construction Proceeds include the amount of Investment Proceeds or earnings that the Issuer reasonably expected as of the Issuance Date to earn during the 2-year period. For purposes of satisfying the final spend-down requirement,

Available Construction Proceeds include actual Investment Proceeds or earnings from the Issuance Date through the end of the 2-year period.

Available Construction Proceeds do not include Gross Proceeds used to pay Issuance Costs financed by the Issue, but do include earnings on such Proceeds. Thus, an expenditure of Gross Proceeds to pay Issuance Costs does not count toward meeting the spend-down requirements, but expenditures of earnings on such Gross Proceeds to pay Issuance Costs do count.

(B) 1½% penalty in lieu of rebate for Construction Issues. If the Issuer elected in the Tax Compliance Certificate for a Construction Issue, or for the Construction Portion of a Bifurcated Issue, to pay a 1½% penalty in lieu of the Rebate Amount on Available Construction Proceeds in the event that the Construction Issue fails to satisfy any of the spend-down requirements, the 1½% penalty is calculated separately for each spend-down period, including each semi-annual period after the end of the fourth spend-down period until all Available Construction Proceeds have been spent. The penalty is equal to 0.015 times the underexpended Proceeds as of the end of the applicable spend-down period. The fact that no arbitrage is in fact earned during such spend-down period is not relevant. The Rebate Amount with respect to Gross Proceeds other than Available Construction Proceeds (e.g., amounts in a reasonably required reserve or replacement fund or in a Bona Fide Debt Service Fund, to the extent subject to rebate (see footnote 3)) must be timely paid.

PART III: COMPUTATION AND PAYMENT.

SECTION 3.01. COMPUTATION AND PAYMENT OF REBATE AMOUNT.

If none of the Spending Exceptions described above is satisfied (and if the 1-1/2% penalty election for a Construction Issue or the Construction Portion of a Bifurcated Issue has not been made), then within 45 days after each Computation Date, the Issuer shall compute, or cause to be computed, the Rebate Amount as of such Computation Date. The first Computation Date is a date selected by the Issuer, but shall be not later than 5 years after the Issuance Date. Each subsequent Computation Date shall end 5 years after the previous Computation Date except that, in a Variable Yield Issue, the Issuer may select annual Yield Periods. The final Computation Date shall be the date the last obligation of the Issue matures or is finally discharged.

Within 60 days after each Computation Date (except the final Computation Date), the Issuer shall pay to the United States not less than 90% of the Rebate Amount, if any, computed as of such Computation Date. Within 60 days after the final Computation Date, the Issuer shall pay to the United States 100% of the Rebate Amount, if any, computed as of the final Computation Date. In computing the Rebate Amount, a computation credit of $1,000 may be taken into account on the last day of each Bond Year to the Computation Date during which there are unspent Gross Proceeds that are subject to the rebate requirement, and on the final maturity date.

If the operative documents pertaining to the Issue establish a Rebate Fund and require the computation of the Rebate Amount at the end of each Bond Year, the Issuer shall calculate, or cause to be calculated, within 45 days after the end of each Bond Year the Rebate Amount, taking into account the computation credit of $1,000 for each Bond Year. Within 50 days after the end of

each Bond Year, if the Rebate Amount is positive, the Issuer shall deposit in the Rebate Fund such amount as will cause the amount on deposit therein to equal the Rebate Amount, and may withdraw any amount on deposit in the Rebate Fund in excess of the Rebate Amount. Payments of the Rebate Amount to the Internal Revenue Service on a Computation Date shall be made first from amounts on deposit in the Rebate Fund and second from other amounts specified in the operative documents.

Each payment of the Rebate Amount or portion thereof shall be payable to the Internal Revenue Service and shall be made to the Internal Revenue Service Center, Ogden, UT 84201 by certified mail. Each payment shall be accompanied by Internal Revenue Service Form 8038-T and any other form or forms required to be submitted with such remittance.

SECTION 3.02. BOOKS AND RECORDS.

(A) The Issuer or Trustee, as applicable, shall keep proper books of record and accounts containing complete and correct entries of all transactions relating to the receipt, investment, disbursement, allocation and application of the Gross Proceeds of the Issue. Such records shall specify the account or fund to which each Nonpurpose Investment (or portion thereof) held by the Issuer or Trustee is to be allocated and shall set forth as to each Nonpurpose Investment (1) its purchase price, (2) identifying information, including par amount, interest rate, and payments dates, (3) the amount received at maturity or its sales price, as the case may be, including accrued interest, (4) the amounts and dates of any payments made with respect thereto, and (5) the dates of acquisition and disposition or maturity.

The Issuer, Trustee, or Rebate Analyst, as applicable, shall retain the records of all calculations and payments of the Rebate Amount until six years after the retirement of the last obligation that is a part of the Issue.

SECTION 3.03. FAIR MARKET VALUE.

No Nonpurpose Investment shall be acquired for an amount in excess of its fair market value. No Nonpurpose Investment shall be sold or otherwise disposed of for an amount less than its fair market value.

The fair market value of any Nonpurpose Investment shall be the price at which a willing buyer would purchase the Nonpurpose Investment from a willing seller in an arms-length transaction. Fair market value generally is determined on the date on which a contract to purchase or sell the Nonpurpose Investment becomes binding (i.e., the trade date rather than the settlement date). Except as otherwise provided in this Section, a Nonpurpose Investment that is not of a type traded on an established securities market (within the meaning of Section 1273 of the Code) is rebuttably presumed to be acquired or disposed of for a price that is not equal to its fair market value.

(A) Obligations purchased directly from the Treasury. The fair market value of a United States Treasury obligation that is purchased directly from the United States Treasury is its purchase price.

(B) Safe harbor for Guaranteed Investment Contracts. The purchase price of a Guaranteed Investment Contract shall be treated as its fair market value on the purchase date if all the following conditions are met:

(1) The Issuer or broker makes a bona fide solicitation for a specified Guaranteed Investment Contract and receives at least three bona fide bids from reasonably competitive providers (of Guaranteed Investment Contracts) that have no material financial interest in the Issue.

(2) The Issuer purchases the highest-yielding Guaranteed Investment Contract for which a qualifying bid is made (determined net of broker's fees);

(3) The Yield on the Guaranteed Investment Contract (determined net of broker's fees) is not less than the Yield then available from the provider on reasonably comparable Guaranteed Investment Contracts, if any, offered to other persons from a source of funds other than Gross Proceeds of Tax-Exempt Obligations;

(4) The determination of the terms of the Guaranteed Investment Contract takes into account as a significant factor the Issuer's reasonably expected drawdown schedule for the amounts to be invested, exclusive of amounts deposited in a Bona Fide Debt Service Fund and a reasonably required reserve or replacement fund;

(5) The terms of the Guaranteed Investment Contract, including collateral security requirements, are reasonable; and

(6) The obligor on the Guaranteed Investment Contract certifies the administrative costs that it is paying (or expects to pay) to third parties in connection with the Guaranteed Investment Contract.

(C) Safe harbor for certificates of deposit. The purchase price of a certificate of deposit shall be treated as its fair market value on the purchase date if all of the following requirements are met:

(1) The certificate of deposit has a fixed interest rate, a fixed payment schedule, and a substantial penalty for early withdrawal; and

(2) The Yield on the certificate of deposit is not less than (a) the Yield on reasonably comparable direct obligations of the United States, or (b) the highest Yield that is published or posted by the provider to be currently available from the provider on reasonably comparable certificates of deposit offered to the public.

Certificates evidencing the foregoing requirements should be obtained before purchasing any Guaranteed Investment Contract or certificate of deposit.

SECTION 3.04. CONSTRUCTIVE SALE/PURCHASE.

(A) Nonpurpose Investments that are held by the Issuer or Trustee as of any Computation Date (or Bond Year if the computations are required to be done annually) shall be treated for purposes of computing the Rebate Amount as of such date as having been sold for their fair market value as of such date. Investment Property which becomes allocated to Gross Proceeds of the Issue on a date after such Investment Property has actually been purchased shall be treated for purposes of the rebate requirements as having been purchased by the Issuer on such date of allocation at its fair market value on such date.

(B) For purposes of constructive or deemed sales or purchases of Investment Property (other than Investment Property in the Escrow Fund or that is otherwise not invested for a Temporary Period or is not part of a reasonably required reserve or replacement fund for the Issue) must be valued at its fair market value on the date of constructive or deemed sale or purchase

(C) Except as set forth in (B), fixed rate Investment Property that is (1) issued with not more than 2% of original issue discount or original issue premium, (2) issued with original issue premium that is attributable exclusively to reasonable underwriters' compensation or (3) acquired with not more than 2% of market discount or market premium, may be treated as having a fair market value equal to its outstanding stated principal amount, plus accrued interest. Fixed rate Investment Property also may be treated as having a fair market value equal to its present value.

SECTION 3.05. ADMINISTRATIVE COSTS.

(A) Administrative costs shall not be taken into account in determining the payments for or receipts from a Nonpurpose Investment unless such administrative costs are Qualified Administrative Costs. Thus, administrative costs or expenses paid, directly or indirectly, to purchase, carry, sell, or retire Nonpurpose Investments generally do not increase the Payments for, or reduce the Receipts from, Nonpurpose Investments.

(B) Qualified Administrative Costs are taken into account in determining the Payments and Receipts on Nonpurpose Investments and thus increase the Payments for, or decrease the Receipts from, Nonpurpose Investments. In the case of a Guaranteed Investment Contract, a broker's commission or similar fee paid on behalf of either the Issuer or the provider is an administrative cost that is not a Qualified Administrative Cost to the extent that the present value (computed using the taxable discount rate used by the parties to compute the commission or, if not readily ascertainable, a reasonable taxable discount rate) of the commission, as of the date the contract is purchased, exceeds the present value of annual payments equal to 0.05 percent of the weighted average amount reasonably expected to be invested each year during the term of such contract.

PART IV: COMPLIANCE AND AMENDMENT

SECTION 4.01. COMPLIANCE.

The Issuer, Trustee or Rebate Analyst, as applicable, shall take all necessary steps to comply with the requirements of these Instructions in order to ensure that interest on the Issue is excluded from gross income for federal income tax purposes under Section 103(a) of the Code. However, compliance shall not be required in the event and to the extent stated therein the Issuer and the Trustee receive a Bond Counsel's Opinion that either (A) compliance with such requirement is not required to maintain the exclusion from gross income for federal income tax purposes of interest on the Issue, or (B) compliance with some other requirement in lieu of such requirement will comply with Section 148(f) of the Code, in which case compliance with the other requirement specified in the Bond Counsel's Opinion shall constitute compliance with such requirement.

SECTION 4.02. LIABILITY.

If for any reason any requirement of these Instructions is not complied with, the Issuer and the Trustee, if applicable, shall take all necessary and desirable steps to correct such noncompliance within a reasonable period of time after such noncompliance is discovered or should have been discovered with the exercise of reasonable diligence. The Trustee shall have no duty or responsibility to independently verify any of the Issuer's, or the Rebate Analyst's, calculations with respect to the payments of the Rebate Amount due and owing to the United States. Under no circumstances whatsoever shall the Trustee be liable to the Issuer, any bondholder or any other person for any inclusion of the interest on the Issue in gross income for federal income tax purposes, or any claims, demands, damages, liabilities, losses, costs or expenses resulting therefrom or in any way connected therewith, so long as the Trustee acts only in accordance with these Instructions and the operative documents pertaining to the Issue.

(End of Attachment A-1)

Form **8038-G**
(Rev. November 2000)
Department of the Treasury
Internal Revenue Service

Information Return for Tax-Exempt Governmental Obligations

► **Under Internal Revenue Code section 149(e)**
► **See separate Instructions.**
Caution: *If the issue price is under $100,000, use Form 8038-GC.*

OMB No. 1545-0720

Part I Reporting Authority

If **Amended Return,** check here ► ☐

1	Issuer's name **City of Surprise**	2	**Issuer's employer identification number** **86 6007796**
3	Number and street (or P.O. box if mail is not delivered to street address) **16000 N. Civic Center Plaza**	Room/suite	4 Report number **N/A**
5	City, town, or post office, state, and ZIP code **Surprise, AZ 85374**		6 Date of issue **TBD**
7	Name of issue **2010 CW Revolving Fund Loan**		8 CUSIP number **N/A**
9	Name and title of officer or legal representative whom the IRS may call for more information **Robert J. Beckley, Public Works Director**	10	Telephone number of officer or legal representative (**623**) **222-6020**

Part II Type of Issue (check applicable box(es) and enter the issue price) See instructions and attach schedule

11	☐ Education	11	
12	☐ Health and hospital	12	
13	☐ Transportation	13	
14	☐ Public safety	14	
15	☐ Environment (including sewage bonds)	15	
16	☐ Housing	16	
17	☐ Utilities	17	
18	☑ Other. Describe ► **CW Revolving Fund Loan**	18	**1,500,000**
19	If obligations are TANs or RANs, check box ► ☐ If obligations are BANs, check box ► ☐		
20	If obligations are in the form of a lease or installment sale, check box ► ☐		

Part III Description of Obligations. Complete for the entire issue for which this form is being filed.

	(a) Final maturity date	(b) Issue price	(c) Stated redemption price at maturity	(d) Weighted average maturity	(e) Yield
21	**07/01/2029**	$**1,500,000**	$**1,500,000**	**TBD** years	**TBD** %

Part IV Uses of Proceeds of Bond Issue (including underwriters' discount)

22	Proceeds used for accrued interest			22	
23	Issue price of entire issue (enter amount from line 21, column (b))			23	**1,500,000**
24	Proceeds used for bond issuance costs (including underwriters' discount)	24			
25	Proceeds used for credit enhancement	25			
26	Proceeds allocated to reasonably required reserve or replacement fund	26			
27	Proceeds used to currently refund prior issues	27			
28	Proceeds used to advance refund prior issues	28			
29	Total (add lines 24 through 28)			29	
30	Nonrefunding proceeds of the issue (subtract line 29 from line 23 and enter amount here)			30	**1,500,000**

Part V Description of Refunded Bonds (Complete this part only for refunding bonds.)

31	Enter the remaining weighted average maturity of the bonds to be currently refunded ►	**N/A** years
32	Enter the remaining weighted average maturity of the bonds to be advance refunded ►	**N/A** years
33	Enter the last date on which the refunded bonds will be called ►	**N/A**
34	Enter the date(s) the refunded bonds were issued ►	**N/A**

Part VI Miscellaneous

35	Enter the amount of the state volume cap allocated to the issue under section 141(b)(5)	35	**N/A**
36a	Enter the amount of gross proceeds invested or to be invested in a guaranteed investment contract (see instructions)	36a	**N/A**
b	Enter the final maturity date of the guaranteed investment contract ► **N/A**		
37	Pooled financings: **a** Proceeds of this issue that are to be used to make loans to other governmental units	37a	

b If this issue is a loan made from the proceeds of another tax-exempt issue, check box ► ☐ and enter the name of the issuer ► _____ and the date of the issue ► _____

38 If the issuer has designated the issue under section 265(b)(3)(B)(i)(III) (small issuer exception), check box ► ☐
39 If the issuer has elected to pay a penalty in lieu of arbitrage rebate, check box ► ☐
40 If the issuer has identified a hedge, check box ► ☐

Sign Here

Under penalties of perjury, I declare that I have examined this return and accompanying schedules and statements, and to the best of my knowledge and belief, they are true, correct, and complete.

TBD	**Robert J. Beckley, Public Works Direct**
Signature of issuer's authorized representative Date	Type or print name and title

LOAN AGREEMENT STANDARD TERMS AND CONDITIONS

Water Infrastructure Finance Authority of Arizona

TABLE OF CONTENTS

Page

Article 1 Covenants of the Local Borrower with Respect to the System and the Project

Section 1.1 Operation and Maintenance of System 3
Section 1.2 Additions and Modifications 3
Section 1.3 Disposition of Project and System 3

Article 2 Additional Covenants of the Local Borrower

Section 2.1 Unconditional Obligations 4
Section 2.2 Performance Under Loan Agreement 4
Section 2.3 Disclaimer of Warranties and Indemnification 4
Section 2.4 Loan Repayments; Prepayments; Adjustments; Late Charges 4
Section 2.5 Source of Repayment of Local Borrower's Obligations and Pledge 5
Section 2.6 Insurance 5
Section 2.7 No Liens 5
Section 2.8 Disadvantaged Business Enterprise Program 5

Article 3 Representations of Local Borrower

Section 3.1 Organization and Authority 6
Section 3.2 Full Disclosure 6
Section 3.3 Pending Litigation 7
Section 3.4 Compliance with Existing Laws and Agreements 7
Section 3.5 No Defaults 7
Section 3.6 Governmental Consent 7
Section 3.7 Compliance with Law 7

Article 4 Assignment

Section 4.1 Assignment and Transfer by Authority 8
Section 4.2 Assignment by Local Borrower 8

Article 5 Defaults and Remedies

Section 5.1 Events of Default 8
Section 5.2 Notice of Default 9
Section 5.3 Remedies on Default 9
Section 5.4 Attorney's Fees and Other Expenses 9
Section 5.5 Application of Moneys 9
Section 5.6 No Remedy Exclusive; Waiver; Notice 9
Section 5.7 Retention of Authority's Rights 10
Section 5.8 Default by the Authority 10

Article 6 Provisions Applicable to Loans Financed by Authority Bonds

Section 6.1 General 10
Section 6.2 Tax Covenants 11
Section 6.3 Third Party Beneficiaries 11
Section 6.4 Additional Documents Relating to Authority Bonds 8
Section 6.5 Disclosure Regarding Authority Bonds 9
Section 6.6 Assignment and Transfer by Authority to Trustee 12
Section 6.7 Conditions to Assignment by Local Borrower 10
Section 6.8 Sale or Other Disposition of Project or System 13
Section 6.9 Deficiencies Under Bond Documents Caused by Failure to Make Loan Repayment 13
Section 6.10 Indemnification 13
Section 6.11 Compliance with Master Trust Indenture 13
Section 6.12 Provisions Relating to Default 14
Section 6.13 Tax Compliance Certificate 11

Article 7 Miscellaneous

Section 7.1 Binding Effect 14
Section 7.2 Severability 14
Section 7.3 Amendments, Supplements and Modifications 14
Section 7.4 Execution in Counterparts 14
Section 7.5 Applicable Law 14
Section 7.6 Captions 14
Section 7.7 Further Assurances 14
Section 7.8 Arbitration 14
Section 7.9 Notice Regarding A.R.S. § 38-511 14
Section 7.10 E-Verify Compliance A.R.S. § 23-214 12

Article 8 Definitions

Section 8.1 Definitions 153
Section 8.2 Rules of Interpretation 186

Article 9 List of Federal Laws and Authorities

This document sets forth Standard Terms and Conditions applicable to the Loan made by the WATER INFRASTRUCTURE FINANCE AUTHORITY OF ARIZONA (the "*Authority*") to the Local Borrower. These Standard Terms and Conditions are a part of the Loan Agreement to which this document is attached. Certain terms used herein are defined in Article 8.

Article 1 Covenants of the Local Borrower Relating to the System and the Project.

Section 1.1 **Operation and Maintenance of System**. The Local Borrower covenants and agrees that it shall, in accordance with prudent utility practice, (a) at all times operate the properties of the System and any business in connection therewith in an efficient manner, (b) maintain the System in good repair, working order and operating condition, and (c) from time to time make all necessary and proper repairs, renewals, replacements, additions, betterments and improvements with respect to the System so that at all times the operations carried on in connection therewith shall be properly and advantageously conducted from revenues of the System or, if the Local Borrower so elects, from any other source of funds lawfully available.

Section 1.2 **Additions and Modifications**. The Local Borrower may make any additions, renewals, replacements, modifications or improvements to the System which it deems desirable and which do not materially reduce the operational integrity of any part of the System. All such renewals, replacements, additions, modifications and improvements shall become a part of the System.

Section 1.3 **Disposition of Project and System**.

(a) The Local Borrower shall not sell, lease, abandon or otherwise dispose of all or substantially all or any substantial portion of the Project or the System except upon compliance with the provisions of this Section; provided, however that the requirements of this Section shall not apply to transactions which are capital leases within the meaning of generally accepted accounting principles to finance expansion or improvement of the System and under which the Local Borrower maintains a purchaser's interest or other beneficial ownership, use, possession and control of the System so long as no default exists.

(b) The Local Borrower may sell, lease, abandon or otherwise dispose of all or substantially all or any substantial portion of the Project or the System if the Local Borrower shall give at least ninety (90) days' prior written notice to the Authority of the proposed transaction, and the Authority gives its written consent which shall not be unreasonably withheld. The Local Borrower understands that the Authority, in determining whether or not to give its consent, must determine that the proposed transaction will not adversely affect the Authority's ability to meet its duties, covenants, obligations and agreements or conditions of any grant received by the Authority or the State from the United States of America, which is related to the Capital Grant Facility or any capitalization grants received by the Authority or the State under the Federal Water Pollution Control Act, as amended, and the Federal Safe Drinking Water Act, as amended.

(c) Notwithstanding the provisions of subsection (b) above, the Local Borrower may sell, lease or otherwise dispose of, any of the property comprising part of the System without prior notice to or the consent of the Authority, other than the Project, in either of the following circumstances:

(i) If the Local Borrower determines that such property is not necessary, useful or profitable to the operation of the System; or

(ii) If the value of such property sold, leased or otherwise disposed of in any one year is equal to not more than 5% of the value of the fixed assets of the System.

Section 1.4 **Cost of Project**. The Local Borrower certifies that the estimated Eligible Project Costs as listed in Section 1 of Exhibit B is a reasonable and accurate estimation of the Eligible Project Costs and, upon the direction

of the Authority the Local Borrower will supply the Authority with a certificate from its engineer stating that such estimated Eligible Project Costs is a reasonable and accurate estimation.

Article 2 Additional Covenants of the Local Borrower

Section 2.1 **Unconditional Obligations**. The obligation of the Local Borrower to make the Loan Repayments and the obligation to perform and observe the other duties, covenants, obligations and agreements on its part described herein are payable solely from the Source of Repayment described in this Loan Agreement and shall be absolute and unconditional and shall not be abated, rebated, set-off, reduced, abrogated, terminated, waived, diminished, postponed or otherwise modified in any manner or to any extent whatsoever, while any payments hereunder remain unpaid, regardless of any contingency, act of God, event or cause whatsoever, including (without limitation) any acts or circumstances that may constitute failure of consideration, eviction or constructive eviction, the taking by eminent domain or destruction of or damage to the Project or the System, commercial frustration of the purpose, any change in the laws of the United States of America or of the State or any political subdivision of either or in the rules or regulations of any governmental authority, any failure of the Authority to perform and observe any agreement, whether express or implied, or any duty, liability or obligation arising out of or connected with the Project or this Loan Agreement, or any rights of set-off, recoupment, abatement or counterclaim that the Local Borrower might otherwise have against the Authority or any other party or parties; provided, however, that payments under this Loan Agreement shall not constitute a waiver of any such rights. The Local Borrower shall not be obligated to make any payments required to be made by any other local borrowers under separate loan agreements or local borrower bonds. Notwithstanding any other provision of this Section 2.1, or this Loan Agreement, neither the Authority, nor any assignee of the Authority shall have the right or ability to compel the repayment of this Loan Agreement from any source other than the Source of Repayment.

Section 2.2 **Performance Under Loan Agreement**. The Local Borrower covenants and agrees (a) to maintain the System in good repair and operating condition; (b) to cooperate with the Authority to the extent it may lawfully do so, in the observance and performance of the respective duties, covenants, obligations and agreements of such Local Borrower and the Authority under this Loan Agreement; and (c) to comply with the covenants set forth in this Loan Agreement.

Section 2.3 **Disclaimer of Warranties**. The Local Borrower acknowledges and agrees that (i) the Authority makes no warranty or representation, either express or implied as to the value, design, condition, merchantability or fitness for particular purpose or fitness for any use of the System or the Project or any portions thereof or any other warranty or representation with respect thereto; (ii) in no event shall the Authority or its respective agents be liable or responsible for any direct, incidental, indirect, special or consequential damages in connection with or arising out of this Loan Agreement or the Project or the existence, furnishing, functioning or use of the System or the Project; and (iii) are not intended to and shall not be construed as a waiver of any defense or limitation on damages provided for under and pursuant to the laws of the United States or of the State.

Section 2.4 **Loan Repayments; Prepayments; Adjustments; Late Charges**.

(a) The Local Borrower may prepay the Loan Repayments in whole or in part at any time without premium upon receipt of the prior written approval of the Authority and only in conformance with such terms and conditions as the Authority, in its sole discretion, may require. The Authority's consent to a prepayment will not be unreasonably withheld. If the Local Borrower makes prepayments of Loan Repayments, the Authority shall adjust principal amounts within the Loan Repayment Schedule contained in Exhibit A pro rata in accordance with guidance from the Local Borrower, provided that the Local Borrower shall not receive credit for prepayments of principal without consent of the Authority. Upon such adjustment, the Authority shall compute the adjusted combined interest and fee amounts to reflect the adjusted principal amounts and shall enter the results in the Loan Repayment Schedule with notice to Local Borrower.

(b) Each payment made as a Loan Repayment as described in subsection (a) shall be applied first to the combined interest and fee payment then due and payable on the Loan and then to the principal amount of the Loan.

(c) In addition to the other payments required by this Section, the Local Borrower shall pay a late charge for any payment that is received by the Authority later than the tenth (10) day following its due date, in an amount equal to six percent (6%) per annum on such late payment from its due date to the date it is actually paid; provided, however, that the combined interest and fee rate payable on the Loan including such late charge shall not be in excess of the maximum rate permitted by law or any proceedings or resolution authorizing the execution of this Loan Agreement.

(d) Upon the final disbursement, if the Loan is less than the estimated Eligible Project Costs, the amount of each Principal Installment due as set forth in the Loan Repayment Schedule contained in Exhibit A shall be adjusted pro rata. Upon such adjustment, the Authority shall compute the adjusted combined interest and fee amounts to reflect the adjusted principal amounts and shall enter the results in the Loan Repayment Schedule with notice to Local Borrower.

Section 2.5 **Source of Repayment of Local Borrower's Obligations and Pledge**. The Local Borrower irrevocably pledges the Source of Repayment described in this Loan Agreement for the punctual payment of all amounts due under the Loan Agreement. The Authority and the Local Borrower agree that the amounts payable by the Local Borrower under this Loan Agreement are payable solely from the Source of Repayment described in this Loan Agreement and are not payable from any other source whatsoever, unless the Local Borrower chooses to pay, and pays, any amount due hereunder from any other source lawfully available to it.

Section 2.6 **Insurance**. The Local Borrower shall maintain or cause to be maintained in force, insurance policies with responsible insurers or self-insurance programs or through membership in a risk retention pool, including, but not limited to, the Arizona Municipal Risk Retention Pool (in accordance with the Local Borrower's customary practices) providing against risk of direct physical loss, damage or destruction of the Project and the System, at least to the extent that similar insurance is usually carried by utilities constructing, operating and maintaining system facilities of the nature of the System, including liability coverage, all to the extent available at reasonable cost.

Section 2.7 **No Liens**. Except for

(i) the debt service on any future bonds, notes or other evidence of indebtedness of the Local Borrower issued or contractual obligations incurred in accordance with this Loan Agreement payable from the funds pledged to the payment of this Loan Agreement which are on parity with the lien and charge on the funds so pledged to pay this Loan Agreement and

(ii) as provided in Exhibit D of this Loan Agreement, the debt service on currently outstanding bonds, notes or evidences of indebtedness or contractual obligations of the Local Borrower, if any, payable from the Source of Repayment described in Exhibit D of this Loan Agreement which the Local Borrower has disclosed to the Authority in writing,

the funds so pledged as described in this Loan Agreement after the payment of all costs of operating and maintaining the System, are and will be free and clear of any pledge, lien, charge or encumbrance thereon or with respect thereto which are prior to, or of equal rank with, the obligation of the Local Borrower to pay this Loan Agreement, and all corporate or other action on the part of the Local Borrower to that end has been and will be duly and validly taken.

Section 2.8 **Disadvantaged Business Enterprises**. The Local Borrower must

(i) Make a good faith effort to award a fair share of work to DBE's who are small business enterprises (SBE's), minority business enterprises (MBE's), and women business enterprise (WBE's).

(ii) Require sub-recipients, including prime contractors and subcontractors, to make a good faith effort to award a fair share of work to DBE's.

(iii) Require prime contractors to pay subcontractors for satisfactory performance no more than thirty (30) days from the prime contractor's receipt of payment from the Local Borrower..

(iv) Require prime contractors to notify the Local Borrower in writing prior to any termination of a DBE subcontractor for convenience by the prime contractor.

(v) Report DBE participation to the Authority.

Article 3 Representations of Local Borrower

The Local Borrower represents for the benefit of the Authority that the representations contained in this Loan Agreement are true at the time of execution and delivery of this Loan Agreement and, other than with respect to events outside of Local Borrower's control, will be true in all material respects at all times during the term of this Loan Agreement.

Section 3.1 **Organization and Authority**.

(a) The Local Borrower is a Political Subdivision or Indian Tribe as defined in the Authority Act.

(b) The Local Borrower has full legal right and authority and has, or will obtain as and when required, all necessary licenses and permits required to acquire, own, operate and maintain the Project and the System, to carry on its activities relating thereto, to execute and deliver this Loan Agreement, to undertake and complete the Project, to pledge the Source of Repayment, and to carry out and consummate all transactions contemplated by this Loan Agreement. The Project is a project which the Local Borrower may undertake pursuant to State law and for which the Local Borrower is authorized by law to borrow money.

(c) The proceedings of the Local Borrower's governing body approving this Loan Agreement and authorizing its execution, issuance and delivery on behalf of the Local Borrower, and authorizing the Local Borrower to undertake and complete the Project have been duly and lawfully adopted in accordance with the laws of the State.

(d) This Loan Agreement has been duly authorized, executed and delivered by an Authorized Officer of the Local Borrower; and, assuming that the Authority has all the requisite power and authority to authorize, execute and deliver, and has duly authorized, executed and delivered this Loan Agreement, this Loan Agreement constitutes a legal and valid obligation of the Local Borrower enforceable in accordance with its terms, and the information contained under "Description of the Loan" in this Loan Agreement is true and accurate in all material respects.

Section 3.2 **Full Disclosure**.

(a) To the best of the Local Borrower's knowledge, there is no fact that the Local Borrower has not disclosed to the Authority in writing that materially adversely affects the properties, activities, prospects or condition (financial or otherwise) of the Local Borrower or the System, or the ability of the Local Borrower to make all Loan Repayments due hereunder and otherwise observe and perform its duties, covenants, obligations and agreements under this Loan Agreement.

(b) The information relating to the Local Borrower (including without limitation the financial and statistical data contained therein) submitted to the Authority by the Local Borrower in connection with the Authority's approval of the Loan was at the time of the Authority's approval of the Loan and at all times subsequent thereto up to and including the Loan Closing, will be (if necessary by amendment provided by the Local Borrower) true and correct and will not contain an untrue statement of material fact or omit to state a material fact necessary to make the statements made therein, in light of the circumstances under which they were made, not misleading in any adverse respect. To the extent permitted by law, and notwithstanding any other provision of this Loan Agreement, the Local Borrower will indemnify, save and hold harmless the Authority, and each of the Authority's agents, for, from and against any and all claims, damages, liability and court awards including costs, expenses and reasonable attorneys' fees incurred as a result of any omission or misstatement of material fact in the information submitted to the Authority by the Local Borrower in connection with the Authority's approval of the Loan, as it may have been supplemented and amended by the Local Borrower.

Section 3.3 **Pending Litigation**. There are no proceedings pending, or to the knowledge of the Local Borrower, threatened, against or affecting the Local Borrower, in any court or before any governmental authority or arbitration board or tribunal that, if adversely determined, would materially adversely affect the properties, activities, prospects or condition (financial or otherwise) of the Local Borrower or the System, or the ability of the Local Borrower to make all Loan Repayments and otherwise observe and perform its duties, covenants, obligations and agreements under this Loan Agreement that have not been disclosed in writing to the Authority in the Local Borrower's application for the Loan or otherwise.

Section 3.4 **Compliance with Existing Laws and Agreements**. The authorization, execution and delivery of this Loan Agreement by the Local Borrower, the observance and performance by the Local Borrower of its duties, covenants, obligations and agreements hereunder and the consummation of the transactions provided for in this Loan Agreement, the compliance by the Local Borrower with the provisions of this Loan Agreement and the undertaking and completion of the Project will not result in any breach of any of the terms, conditions or provisions of, or constitute a default under, or result in the creation or imposition of any lien, charge or encumbrance upon any property or assets of the Local Borrower pursuant to any existing ordinance or resolution, trust agreement, indenture, mortgage, deed of trust, loan agreement or other instrument (other than the lien and charge of this Loan Agreement and any ordinance or resolution or indenture which authorized outstanding obligations of the Local Borrower which are on a parity with this Loan Agreement as to a lien on, or a source and security for, payment thereon from the source of payment that is pledged to the Loan Repayments) to which the Local Borrower is a party or by which the Local Borrower, the System or any of its property or assets may be bound, nor will such action result in any violation of the provisions of the charter or other document pursuant to which the Local Borrower was established or any laws, ordinances, resolutions, governmental rules, regulations or court orders to which the Local Borrower, the System or its properties or operations are subject.

Section 3.5 **No Defaults**. No event has occurred and no condition exists that, upon authorization, execution and delivery of this Loan Agreement or receipt of the amount of the Loan, would constitute an Event of Default hereunder. The Local Borrower is not in violation of, and has not received notice of any claimed violation of, any term of any agreement or other instrument to which it is a party or by which it may be bound, which violation would materially adversely affect the properties, activities, prospects or condition (financial or otherwise) of the Local Borrower or the ability of the Local Borrower to make all Loan Repayments or otherwise observe and perform its duties, covenants, obligations and agreements under this Loan Agreement.

Section 3.6 **Governmental Consent**. The Local Borrower has or will have obtained prior to the date of the Loan Closing all permits and approvals required to date by any governmental body or officer (and reasonably expects to receive all permits required in the future by any governmental agency) for the making, observance and performance by the Local Borrower of its duties, obligations and agreements under this Loan Agreement or for the undertaking or completion of the Project and the financing thereof, and the Local Borrower has complied with all applicable provisions of law requiring any notification, declaration, filing or registration with any governmental body or officer in connection with the making, observance and performance by the Local Borrower of its duties, covenants, obligations and agreements under this Loan Agreement or with the undertaking or completion of the Project and the financing thereof; and the Local Borrower has complied with all applicable provisions of law requiring any notification, declaration, filing or registration with any governmental body or officer in connection with the making, observance and performance by the Local Borrower of its duties, covenants, obligations and agreements under this Loan Agreement or with the undertaking or completion of the Project and the financing thereof. No consent, approval or authorization of, or filing, registration or qualification with, any governmental body or officer, other than those already obtained or reasonably expected to be obtained, is required on the part of the Local Borrower as a condition to the authorization, execution and delivery of this Loan Agreement, the undertaking or completion of the Project or the consummation of any transaction herein contemplated.

Section 3.7 **Compliance with Law**. The Local Borrower:

(a) is in compliance with all laws, ordinances, governmental rules and regulations to which it is subject and the failure to comply with which would materially adversely affect the ability of the Local Borrower to conduct its activities or undertake or complete the Project or the condition (financial or otherwise) of the Local Borrower or the System; and

(b) has obtained, or will obtain as and when required, all licenses, permits, franchises or other governmental authorizations necessary for the ownership of its property or for the conduct of its activities which, if not obtained, would materially adversely affect the ability of the Local Borrower to undertake or complete the Project or the condition (financial or otherwise) of the Local Borrower or the System.

Article 4 Assignment

Section 4.1 **Assignment and Transfer by Authority**. The Local Borrower hereby approves and consents to any assignment or transfer of this Loan Agreement that the Authority deems to be necessary in connection with the Clean Water Revolving Fund and Drinking Water Revolving Fund programs of the Authority.

Section 4.2 **Assignment by Local Borrower**. This Loan Agreement may not be assigned by the Local Borrower for any reason, unless the following conditions shall be satisfied: (i) the assignee shall be a governmental unit within the meaning of Section 141(c) of the Code or another entity acceptable to the Authority and the assignee shall have expressly assumed in writing the full and faithful observance and performance of the Local Borrower's duties, covenants, agreements and obligations hereunder; (ii) immediately after such assignment, the assignee shall not be in default in the performance or observance of any duties, covenants, obligations or agreements of the Local Borrower hereunder; and (iii) the Authority shall receive an opinion of counsel to the effect that such assignment will not violate the provisions of any agreement entered into by the Authority with, or condition of any grant received by the Authority from the United States of America relating to the Capital Grant Facility or any capitalization grants received by the Authority or the State under the Federal Water Pollution Control Act and the Federal Safe Drinking Water Act.

No assignment shall relieve the Local Borrower from primary liability for any of its obligations under this Loan Agreement and in the event of such assignment, the Local Borrower shall continue to remain primarily liable for the performance and observance of its obligations to be performed and observed under this Loan Agreement.

Article 5 Defaults and Remedies

Section 5.1 **Events of Default**. If any of the following events occurs, it is hereby defined as and declared to be and to constitute an "*Event of Default*":

(a) failure by the Local Borrower to pay, or cause to be paid, when due any Loan Repayment;

(b) failure by the Local Borrower to make, or cause to be made, any required payments of principal, redemption premium, if any, and interest on any bonds, notes or other obligations of the Local Borrower for borrowed money (other than the Loan), after giving effect to the applicable grace period, the payments of which are secured by the Source of Repayment described in this Loan Agreement;

(c) failure by the Local Borrower to perform any duty, covenant, obligation or agreement on its part to be observed or performed under this Loan Agreement, other than as referred to in paragraphs (a) and (b) of this Section, which failure shall continue for a period of thirty (30) days after written notice, specifying such failure and requesting that it be remedied, is given to the Local Borrower by the Authority, unless the Authority agrees in writing to an extension of such time prior to its expiration, provided, however, that if the failure stated in such notice is correctable but cannot be corrected within the applicable period the Authority may not unreasonably withhold its consent to an extension of such time if corrective action is instituted by the Local Borrower and diligently pursued until the Event of Default is corrected;

(d) the institution of any proceeding, with the acquiescence of the Local Borrower, for the purpose of effecting a composition between the Local Borrower and its creditors or for the purpose of adjusting the claims of such creditors, pursuant to any federal or state statute now or hereafter enacted, if the claims of such creditors are payable from the Source of Repayment described in this Loan Agreement;

(e) a determination by the Authority that any material representation made by or on behalf of the Local Borrower contained in this Loan Agreement, or in any instrument furnished in compliance with or with reference to this Loan Agreement, is false or misleading in any material respect; and

(f) the filing of a petition by or against the Local Borrower under any federal or state bankruptcy or insolvency law or other similar law in effect on the date of this Loan Agreement or thereafter enacted, unless in the case of any such petition filed against the Local Borrower such petition shall be dismissed within thirty (30) days after such filing and such dismissal shall be final and not subject to appeal; or the Local Borrower becoming insolvent or bankrupt or making an assignment for the benefit of its creditors; or the appointment of a custodian (including, without limitation, a receiver, liquidator or trustee of the Local Borrower or any of its property including the System) by court order, or possession of the Local Borrower or its property or assets is taken if such order remains in effect or such possession continues for more than thirty (30) days.

Section 5.2 **Notice of Default**. The Local Borrower shall give the Authority prompt telephone notice of the occurrence of any Event of Default referred to in Section 5.1 paragraph (c) hereof, and of the occurrence of any other event or condition that constitutes an Event of Default, at such time as any senior administrative or financial officer of the Local Borrower becomes aware of the existence thereof. Any telephone notice pursuant to this Section shall be confirmed in writing by the end of the next Business Day.

Section 5.3 **Remedies on Default.**

(a) Whenever an Event of Default referred to in Section 5.1 hereof shall have occurred and be continuing, the Authority shall have the right to take any action permitted or required pursuant to this Loan Agreement and to take whatever other action at law or in equity as may appear necessary or desirable to collect the amounts then due and thereafter to become due on their scheduled payment dates or to enforce the performance and observance of any duty, covenant, obligation or agreement of the Local Borrower hereunder, including, without limitation, appointment of a receiver of the System.

(b) Nothing in this Loan Agreement shall be construed to affect the Attorney General taking action to enforce this Loan Agreement in accordance with the Authority Act.

Section 5.4 **Attorney's Fees and Other Expenses**. In the event of a default hereunder by the Local Borrower, the Local Borrower shall on demand and to the extent not prohibited by applicable law pay to the Authority the reasonable fees and expenses of attorneys and other reasonable expenses (including without limitation the reasonably allocated costs of in-house counsel and legal staff) incurred by the Authority in the collection of Loan Repayments or any other sum due hereunder or in the enforcement of performance or observance of any other duties, covenants, obligations or agreements of the Local Borrower to the extent permitted by law.

Section 5.5 **Application of Moneys**. The parties acknowledge that: (a) all amounts coming due hereunder as Loan Repayments shall be treated as principal and combined interest and fees with respect to the Loan which amounts are secured by a pledge of the Source of Repayment in accordance with Exhibit D of this Loan Agreement; and (b) amounts coming due under Section 5.4 hereof shall be secured by the Source of Repayment on a basis subordinate to the Loan Repayments, but on a parity with comparable expenses relating to such Outstanding Parity Obligations and Additional Parity Obligations.

However, any moneys collected by the Authority pursuant to Section 5.3 in the exercise of remedies with respect to amounts due or to become due hereunder shall be applied: (a) first, to pay any attorney's fees or other fees and expenses owed by the Local Borrower pursuant to Section 5.4 hereof, (b) second, to pay delinquent combined interest fees and late charges on the Loan; (c) third, to pay combined interest and fees then due and payable on the Loan; (d) fourth, to pay delinquent principal on the Loan in order of scheduled maturity; (e) fifth, to pay principal then due and payable on the Loan; and (f) sixth, to pay any other amounts due and payable pursuant to this Loan Agreement.

Section 5.6 **No Remedy Exclusive; Waiver; Notice**. No remedy conferred upon or reserved to the Authority hereunder is intended to be exclusive, and every such remedy shall be cumulative and shall be in addition to every other remedy given hereunder or now or hereafter existing at law or in equity. No delay or omission to exercise any

right, remedy or power accruing upon any Event of Default shall impair any such right, remedy or power or shall be construed to be a waiver thereof, but any such right, remedy or power may be exercised from time to time and as often as may be deemed expedient. In order to entitle the Authority to exercise any remedy reserved to it as described in this Article, it shall not be necessary to give any notice, other than such notice as may be required in this Article.

Section 5.7 **Retention of Authority's Rights**. Notwithstanding any assignment or transfer of this Agreement pursuant to the provisions hereof, or anything else to the contrary contained herein, the Authority shall have the right upon the occurrence of an Event of Default to take any action, including (without limitation) bringing an action against the Local Borrower at law or in equity, as the Authority may, in its discretion, deem necessary to enforce the obligations of the Local Borrower to the Authority.

Section 5.8 **Default by the Authority**. In the event of any default by the Authority in any duty, covenant, agreement or obligation described in this Agreement, the Local Borrower's remedy for such default shall be limited to injunction, special action, action for specific performance or any other available equitable remedy designed to enforce the performance or observance of any duty, covenant, obligation or agreement of the Authority described herein as may be necessary or appropriate. The Authority shall on demand pay to the Local Borrower the reasonable fees and expenses of attorneys and other reasonable expenses in the enforcement of such performance or observance.

Article 6 Provisions Applicable to Loans Financed by or Pledged to Secure Authority Bonds

Section 6.1 **General**. The Local Borrower acknowledges that the Authority is entering into this Loan Agreement and agreeing to make the Loan at this time for the benefit of the Local Borrower, and that the Authority may finance the Loan, along with other loans to other local borrowers, through the issuance of Authority Bonds and may pledge the Loan to secure Authority Bonds. If and for so long as the Authority's source of funds to make disbursements on, or to carry, the Loan represented by this Loan Agreement is, or becomes, the proceeds of Authority Bonds, or this Loan Agreement is assigned by the Authority as security for payment of amounts due or to become due on Authority Bonds, the Local Borrower agrees to cooperate with the Authority with respect to the issuance of Authority Bonds by furnishing and certifying information concerning the Local Borrower, the Project, the System and the Source of Repayment, and by agreeing to reasonable modifications and additions to this Loan Agreement necessary or convenient for the Authority Bond transaction. Without limiting the generality of the foregoing, the Local Borrower agrees that if the Authority at any time determines, in its discretion, that it is necessary in connection with the issuance of Authority Bonds or the maintenance of the Authority's bond program, then the provisions set forth in this Article shall be in effect.

Section 6.2 **Tax Covenants**.

(a) General. The Local Borrower acknowledges that, in connection with its state revolving fund programs, the Authority issues its Authority Bonds from time to time to finance loans and the Authority also pledges certain loans to secure and to serve as the source of payment for the Authority Bonds. As a result, and under the provisions of federal tax law applicable to the Authority Bonds, it is in the Authority's interest for the Loan to qualify and be a Tax-Exempt Obligation that is not an AMT Obligation. Therefore, the Local Borrower represents and covenants as follows with respect to the Loan and the Authority Bonds. The Local Borrower covenants that it will not take any action, or fail to take any action, if any such action or failure to take such action would adversely affect the exclusion from gross income of the interest on the Loan or the Authority Bonds under Section 103(a) of the Internal Revenue Code or cause the interest on the Loan or the Authority Bonds to become an AMT Obligation, and in the event of such action or omission, it will, promptly upon having such brought to its attention, take such reasonable actions based upon a bond counsel opinion as may rescind or otherwise negate such action or omission. The Local Borrower will not directly or indirectly use or permit the use of any proceeds of the Loan or any other funds of the Local Borrower or take or omit to take any action that would cause the Loan or the Authority Bonds to be or become "arbitrage bonds" within the meaning of Section 148(a) of the Internal Revenue Code or to fail to meet any other applicable requirement of Sections 103, 141, 148, 149 and 150 of the Internal Revenue Code or cause the interest on the Loan or the Authority Bonds to become an item of tax preference for purposes of the alternative minimum tax imposed on individuals and corporations under the

Internal Revenue Code. To that end, the Local Borrower will comply with all applicable requirements of Sections 103, 141, 148, 149 and 150 of the Code to the extent applicable to the Loan.

(b) Modification Based on Bond Counsel Opinion. Notwithstanding any provision of this Section, if the Local Borrower provides to the Authority a bond counsel opinion to the effect that any action required under this Section is no longer required, or to the effect that some further action is required, to maintain the exclusion from gross income of interest on the Loan or the Authority Bonds pursuant to Section 103(a) of the Internal Revenue Code, the provisions of this Section and the covenants in this Section shall be deemed to be modified to that extent.

(c) Bond Counsel Opinion. For purposes of this Article, "bond counsel opinion" means an opinion letter of a firm of attorneys of national reputation experienced in the field of municipal bonds whose opinions are generally accepted by purchasers of municipal bonds, and who is acceptable to the Authority.

Section 6.3 **Third Party Beneficiaries**. The Trustee, the owners from time to time of the Authority Bonds, any Credit Enhancer from time to time of the Authority Bonds and any underwriter of the Authority Bonds are each expressly acknowledged to be third party beneficiaries of this Loan Agreement and each representation, agreement, duty, obligation and provision of this Loan Agreement.

Section 6.4 **Additional Documents Relating to Authority Bonds**. The Local Borrower will furnish to the Authority and certify to such information and execute and deliver and cause to be executed and delivered such documents as the Authority, the underwriter or other parties to any Authority Bond transaction may reasonably require, including, without limitation:

(a) a certificate of an Authorized Officer of the Local Borrower to the effect that the information contained in the Final Official Statement (defined in Section 6.5, paragraph (a)) for the Authority Bonds concerning the Local Borrower is correct in all material respects and is an accurate summary of the information which it purports to summarize, and that nothing has come to the Authorized Officer's attention that would lead the Authorized Officer to believe that the information in the Final Official Statement relating to the Local Borrower contains an untrue statement of a material fact or omits to state a material fact necessary to make the statements therein, in light of the circumstances under which they were made, not misleading; and

(b) subject to the continuing disclosure requirements of Securities and Exchange Commission Rule 15c2-12 (the "*Disclosure Rule*"), a continuing disclosure undertaking of the Local Borrower meeting the requirements of the Disclosure Rule , and a statement of the Local Borrower as to whether it has failed to provide any information and notices required by the provisions of previous continuing disclosure undertakings, if any, of the Local Borrower under the Disclosure Rule, and if it has not, describing the circumstances and status of such failure; and

(c) an appropriate certificate executed by Authorized Officer of the Local Borrower concerning the reasonable expectations of the Local Borrower as to the use of the proceeds of the Loan and such other matters as may be required on the part of the Local Borrower in order to ensure that the Authority Bonds are and will remain Tax-Exempt Obligations that are not AMT Obligations, and the Local Borrower covenants to comply with the provisions of such certificate; and

(d) such other certificates, documents and information, and supplemental opinions of Local Borrower's counsel, as the Authority, the underwriters of the Authority Bonds or other parties to the Authority Bonds transaction may reasonably require and as are necessary to confirm the continued truth and accuracy of information supplied by or on behalf of the Local Borrower.

Section 6.5 **Disclosure Regarding Authority Bonds**.

(a) The information, if any, relating to the Local Borrower (including without limitation the financial and statistical data contained therein) which has been furnished by the Local Borrower to be included in, and which is included in, a Preliminary Official Statement of the Authority (the "*Preliminary Official Statement*"), or a final Official Statement (the "*Final Official Statement*") of the Authority concerning any Authority Bonds, as of the respective dates of each such document and at all times subsequent thereto up to and including the Bond Closing, will be (if

necessary by amendment provided by the Local Borrower) true and correct and will not contain an untrue statement of material fact or omit to state a material fact necessary to make the statements therein, in light of the circumstances under which they were made, not misleading. To the extent permitted by law, and notwithstanding any other provision of this Loan Agreement, the Local Borrower will indemnify, save and hold harmless the Authority and each other local borrower, if any, included in the Final Official Statement, and each of such parties' respective agents, for, from and against any and all claims, damages, liability and court awards including costs, expenses and attorneys fees incurred as a result of any omission or misstatement of a material fact in the Local Borrower's information in the Final Official Statement, as it may have been supplemented or amended by the Local Borrower.

(b) The Local Borrower agrees that from the date of the Final Official Statement and for a period until not later than 25 days after the date of the Bond Closing if and so long as the offering of the Authority Bonds continues (i) the Local Borrower will furnish such information with respect to itself as the Authority (for itself or at the request of the underwriters of the Authority Bonds) may from time to time reasonably request and (ii) if any event shall occur as a result of which it is necessary, in the opinion of Bond Counsel to the Authority, or counsel for the underwriters of the Authority Bonds, to amend or supplement the information in the Final Official Statement relating to the Local Borrower in order to make such information not misleading in light of the circumstances then existing, the Local Borrower will forthwith prepare, and furnish to the Authority and the underwriters such information relating to the Local Borrower as may be necessary to permit the preparation of an amendment of or supplement to the Final Official Statement (in form and substance satisfactory to the Bond Counsel to the Authority and counsel for the underwriters) which will amend or supplement the Final Official Statement so that it will not contain any untrue statement of a material fact or omit to state a material fact necessary in order to make the statements therein, in light of the circumstances then existing, not misleading.

(c) The Local Borrower agrees that if prior to the 25th day following the end of the underwriting period of the Authority Bonds, as defined for purposes of the Disclosure Rule, any event shall occur which causes the representations contained in Section 6.4, paragraph (a) to be false in any material respect, the Local Borrower shall promptly notify the Authority of such development, and if in the opinion of the Authority and the underwriters of the Authority Bonds such development requires the preparation of a supplement or an amendment to the Preliminary Official Statement or the Final Official Statement, the Local Borrower agrees to cooperate with the Authority and the underwriters for the Authority Bonds in preparing any such supplement or amendment in a form acceptable to such parties and to pay all reasonable expenses incurred by such parties in connection with the preparation thereof.

Section 6.6 **Assignment and Transfer by Authority to Trustee**.

(a) The Local Borrower expressly acknowledges that, other than the right of the Authority to be indemnified by the Local Borrower, all right, title and interest of the Authority in, to and under this Loan Agreement will be assigned to the Trustee as security for the Authority Bonds, as applicable, as provided in the Authority's Master Trust Indenture, and that if any Event of Default shall occur the Trustee, pursuant to the Authority's Master Trust Indenture, shall be entitled to act hereunder in the place and stead of the Authority. The Local Borrower hereby acknowledges the requirements of the Authority's Master Trust Indenture applicable to the Authority Bonds and consents to such assignment and appointment. The Authority shall retain the right to compel or otherwise enforce observance and performance by the Local Borrower of its duties, covenants, obligations and to be indemnified by the Local Borrower; provided, however, that in no event shall the Authority or the Trustee have the right to accelerate the payments under this Loan Agreement.

(b) The Local Borrower hereby approves and consents to any assignment or transfer of this Loan Agreement that the Authority deems to be necessary in connection with any refunding of the Authority Bonds or otherwise in connection with the Clean Water Revolving Fund and Drinking Water Revolving Fund programs of the Authority.

Section 6.7 **Conditions to Assignment by Local Borrower**. Notwithstanding Section 4.2, this Loan Agreement may not be assigned by the Local Borrower for any reason, unless the following conditions shall be satisfied: (i) the Authority, the Trustee and the Credit Enhancer, if any, of the Authority Bonds shall have approved said assignment in writing; (ii) the assignee shall be a governmental unit within the meaning of Section 141(c) of the Internal Revenue Code or another entity acceptable to the Authority and the assignee shall have expressly assumed in writing the full and faithful observance and performance of the Local Borrower's duties, covenants, agreements and obligations hereunder; (iii) immediately after such assignment, the assignee shall not be in default in the

performance or observance of any duties, covenants, obligations or agreements of the Local Borrower hereunder; (iv) the Authority and the Trustee shall have received an opinion of bond counsel to the effect that such assignment will not adversely affect the exclusion of interest on the Authority Bonds from gross income for purposes of Federal income taxation under Section 103(a) of the Code or make the Authority Bonds or the Loan AMT Obligations; and (v) the Authority and the Trustee shall receive an opinion of counsel to the effect that such assignment will not violate the provisions of the Master Trust Indenture or any agreement entered into by the Authority with, or condition of any grant received by the Authority from, the United States of America relating to the Capital Grant Facility or any capitalization grants received by the Authority or the State under the Federal Water Pollution Control Act and the Federal Safe Drinking Water Act.

No assignment shall relieve the Local Borrower from primary liability for any of its obligations under this Loan Agreement and in the event of such assignment, the Local Borrower shall continue to remain primarily liable for the performance and observance of its obligations to be performed and observed under this Loan Agreement.

Section 6.8 **Sale or Other Disposition of Project or System**. The Local Borrower agrees that it will not sell, lease, abandon or otherwise dispose of all or substantially all or any substantial portion of the Project or the System unless (i) the transferee assumes the Local Borrower's obligations under this Loan Agreement in accordance with Section 6.6, (ii) the Authority shall by appropriate action determine, in its sole discretion, that such sale, lease, abandonment or other disposition will not adversely affect the Authority's ability to meet its duties, covenants, obligations and agreements under the Bond Documents, and will not adversely affect the eligibility of interest on Authority Bonds then outstanding or which could be issued in the future for exclusion from gross income for purposes of federal income taxation or cause such Authority Bonds to be AMT Obligations, and (iii) the Credit Enhancer, if any, of the Authority Bonds shall have given its prior written consent to such disposition.

Section 6.9 **Deficiencies Under Bond Documents Caused by Failure to Make Loan Repayment**. The Local Borrower acknowledges that payment of the Authority Bonds by the Authority, including payment from moneys drawn by the Trustee from the Bond Reserves or the CWRF Financial Assistance Account and DWRF Financial Assistance Account~~s~~ established under the Bond Documents, does not constitute payment of the amounts due under this Loan Agreement. If at any time the amounts on deposit in the Bond Reserves or the CWRF Financial Assistance Account and DWRF Financial Assistance Account~~s~~ shall be less than the amounts required by the Bond Documents as the result of any transfer of moneys from the Bond Reserves or the CWRF Financial Assistance Account and DWRF Financial Assistance Account~~s~~ which in turn is the result of a failure by the Local Borrower to make any Loan Repayments required hereunder, the Local Borrower agrees to (i) replenish such moneys so transferred, and (ii) replenish any deficiency arising from losses incurred in making such transfer as the result of the liquidation by the Authority of investment securities acquired as an investment of moneys in the Bond Reserves or the CWRF Financial Assistance Account and DWRF Financial Assistance Account~~s~~, by making payments to the Authority in equal monthly installments for the lesser of six (6) months or the remaining term of the Loan at a combined interest and fee rate to be determined by the Authority necessary to make up any loss caused by such deficiency, provided that the combined interest and fee rate payable on the Loan including such make-up combined interest and fees shall not exceed the maximum rate permitted by the Authorizing Proceedings which authorized this Loan Agreement.

Section 6.10 **Indemnification**. To the extent permitted by law, the Local Borrower shall indemnify, save and hold harmless the Authority against any and all claims, damages, liability and court awards including costs, expenses and attorney fees to the extent incurred as a result of any gross negligence or willful misconduct by the Local Borrower, or its employees, agents or subcontractors pursuant to the terms of this Loan Agreement.

Section 6.11 **Compliance with Master Trust Indenture**. The Local Borrower covenants and agrees to take such action as it may lawfully take and as the Authority shall reasonably request so as to enable the Authority to observe and comply with, all duties, covenants, obligations and agreements contained in the Master Trust Indenture insofar as such duties, covenants, obligations and agreements relate to the obligations of the Local Borrower under this Loan Agreement.

Section 6.12 **Provisions Relating to Default**.

(a) Any notice or information which the Local Borrower is to give to the Authority pursuant to the provisions of Article 5 shall also be given by the Local Borrower to the Trustee and to any Credit Enhancer at the same time.

(b) Notwithstanding the provisions of Section 5.3, paragraph (a) and Section 5.7, so long as a Credit Enhancer is not in default of its obligations with respect to its payment guarantee of the Authority Bonds and such guarantee is in effect, the Credit Enhancer shall have the right to direct the exercise of remedies provided for herein and the Trustee and the Authority shall not pursue any remedy except with the prior written consent of the Credit Enhancer.

(c) In the event of a default hereunder by the Local Borrower, the Local Borrower shall also pay the expenses of the Trustee and of any Credit Enhancer in the same manner as provided in Section 5.4 with respect to the expenses of the Authority.

Section 6.13 **Tax Compliance Certificate**. If the Authority Bonds are issued and sold on the basis that they are Tax-Exempt Obligations, an Authorized Officer of the Local Borrower shall deliver an appropriate certificate concerning the reasonable expectations of the Local Borrower as to the use of the proceeds of the Loan and such other matters as may be required on the part of the Local Borrower in order to ensure that the Authority Bonds are and will remain Tax-Exempt Obligations that are not AMT Obligations, and the Local Borrower covenants to comply with the provisions of such certificate.

Article 7 Miscellaneous

Section 7.1 **Binding Effect**. This Loan Agreement shall inure to the benefit of and shall be binding upon the Authority and the Local Borrower and their respective successors and assigns.

Section 7.2 **Severability**. In the event any provision of this Loan Agreement shall be held illegal, invalid or unenforceable by any Court of competent jurisdiction, such holding shall not invalidate, render unenforceable or otherwise affect any other provision hereof.

Section 7.3 **Amendments, Supplements and Modifications**. This Loan Agreement may not be amended, supplemented or modified without the prior written consent of the Authority and the Local Borrower.

Section 7.4 **Execution in Counterparts**. This Loan Agreement may be executed in several counterparts, each of which shall be an original and all of which shall constitute but one and the same instrument.

Section 7.5 **Applicable Law**. This Loan Agreement shall be governed by and construed in accordance with the laws of the State of Arizona, including the Authority Act.

Section 7.6 **Captions**. The captions or headings in this Loan Agreement are for convenience only and shall not in any way define, limit or describe the scope or intent of any provisions or sections of this Loan Agreement.

Section 7.7 **Further Assurances**. The Local Borrower shall, at the request of the Authority, authorize, execute, acknowledge and deliver such further resolutions, conveyances, transfers, assurances, financing statements and other instruments as may be necessary or desirable for better assuring, conveying, granting, assigning and confirming the rights and agreements granted or intended to be granted by this Loan Agreement.

Section 7.8 **Arbitration**. The parties hereto agree to use arbitration to the extent required by Section 12-1518 of the Arizona Revised Statutes.

Section 7.9 **Notice Regarding A.R.S. § 38-511**. To the extent applicable by provision of law, the parties acknowledge that this Loan Agreement is subject to cancellation pursuant to A.R.S. § 38-511, the provisions of which are hereby incorporated herein.

Section 7.10 **E-Verify Compliance A.R.S. § 23-214**. The Local Borrower warrants to the Authority that it is registered with and is participating in the employment verification pilot program as jointly administered by the United States department of homeland security and the social security administration or any of its successor programs (the "E-Verify Program") and that the proof submitted to the Authority of that registration and participation is true and correct. The Local Borrower agrees that it will remain registered with and will participate in the E-Verify Program until the Loan is fully paid. If the Authority determines that the Local Borrower is not so registered and participating, the Authority will notify the Local Borrower by certified mail of the determination of noncompliance and the Local Borrower's right to appeal the determination. On a final determination of noncompliance, the Local Borrower shall repay all monies received as an economic development incentive (within the meaning of Arizona Revised Statutes Section 23-214) to the Authority within thirty days of the final determination.

Article 8 Definitions

Section 8.1 **Definitions**. The following terms as used in this Loan Agreement shall, unless the context clearly requires otherwise, have the following meaning:

"AMT Obligation" means a Tax-Exempt Obligation the interest on which is an item of tax preference for purposes of the alternative minimum tax imposed on individuals and corporations under the Internal Revenue Code.

"*Annual Loan Review Form*" means the loan compliance questionnaire circulated by the Authority to all borrowers as part of the Authority's annual loan portfolio review.

"*Authority*" means the Water Infrastructure Finance Authority of Arizona, a body corporate and politic of the State of Arizona duly created and validly existing under and by virtue of the Authority Act.

"*Authority Act*" means Title 49, Chapter 8 (Section 49-1201 et seq.) of the Arizona Revised Statutes ("A.R.S.").

"*Authority Bonds*" means any bonds of the Authority issued to finance the State's revolving fund established pursuant to the Water Pollution Control Act, as amended, and the Safe Drinking Water Act, as amended.

"*Authorized Officer*" means, (i) with respect to the Local Borrower, the person whose name is set forth in this Loan Agreement or such other person or persons authorized by the Local Borrower to act as an authorized officer of the Local Borrower to perform any act or execute any document relating to the Loan or this Loan Agreement whose name is furnished in writing to the Authority and the Trustee; and (ii) with respect to the Authority, the Chairman, Vice Chairman, Executive Director, or any other person or persons designated by the Board to act on behalf of the Authority with respect to this Loan Agreement; the designation of such person or persons shall be evidenced by a written certificate containing a specimen signature of such person or persons and signed on behalf of the Authority by its Chairman or Vice Chairman.

"*Bond Closing*" means the date of initial delivery of and payment for the Authority Bonds.

"*Bond Documents*" means and includes the Master Trust Indenture, any supplemental indenture and any comparable or related document pursuant to which the Authority Bonds are issued, and all further amendments and supplements thereto adopted in accordance with the provisions thereof.

"Bond Reserves" means reserves established by the Bond Documents for the Authority Bonds to secure timely payment of amounts due on the Authority Bonds even if one or more local borrowers do not make timely payments on their loans.

"*Business Day*" means any day other than a Saturday, Sunday or legal holiday or a day on which banking institutions, in the city in which the designated office of the Authority (being Phoenix, Arizona) is located, are closed.

"*Capital Grant Facility*" means the contractual arrangement established with the Authority by the United States of America Environmental Protection Agency to make capitalization grant payments pursuant to Title VI of the Federal Water Pollution Control Act, as amended (33 U.S.C. § 125 et seq.) and the Federal Safe Drinking Water Act, as amended (particularly 42 U.S.C. § 300j-12 et seq.).

"*Clean Water Act*" means the Federal Water Pollution Control Act amendments of 1972 (P.L. 92-500; 86 Stat. 816), as amended by the Water Quality Act of 1987 (P.L. 100-4; 101 Stat. 7).

"*Clean Water Revolving Fund*" means the fund established by A.R.S. § 49-1221.

"*Code*" means the Internal Revenue Code of 1986, the Regulations (whether temporary or final) under that Code or the statutory predecessor of that Code, and any amendments of, or successor provisions to, the foregoing and any official rulings, announcements, notices, procedures and judicial determinations regarding any of the foregoing, all as and to the extent applicable. Unless otherwise indicated, reference to a Section includes any applicable successor section or provision and such applicable Regulations, rulings, announcements, notices, procedures and determinations pertinent to that Section.

"*Combined Interest and Fee Rate*" means periodic interest and fee payments made by the Borrower, see Exhibit A to this Loan Agreement.

"*Construction Period"* means the period from the date of the Loan Closing until the date of the final disbursement of proceeds of the Loan pursuant to this Loan Agreement, but in no event later than the third anniversary of the Loan Closing.

"*Cost*" means those costs that are eligible to be funded from draws under the Capital Grant Facility and are reasonable, necessary and allocable to the Project and are permitted by generally accepted government auditing standards to be costs of the Project.

"*Credit Enhancer*" means the entity so designated in the Bond Documents, if any, or any successor thereto, that from time to time has issued and outstanding a municipal bond insurance policy or similar payment guarantee relating to the Authority Bonds.

"*CWRF Financial Assistance Account*" means the account so designated in the Master Trust Indenture to which loans funded by the Clean Water Revolving Fund shall be credited.

"*Debt Management Fee*" means the fee component of the combined interest and fee payments made by the Borrower, see Exhibit A to this Loan Agreement.

"*Department*" means the Department of Environmental Quality of the State of Arizona.

"*Drinking Water Facility*" has the meaning given that term in the Authority Act, currently: a community water system or a non-profit noncommunity water system as defined in the Federal Safe Drinking Water Act (P.L. 93-523; 88 Stat. 1660l; P.L. 95-190; 91 Stat. 1393; P.L. 104-182; 110 Stat. 1613) that is located in the State. The term does not include water systems owned by federal agencies.

"*Drinking Water Revolving Fund*" means the fund established by A.R.S. § 49-1241.

"*DWRF Financial Assistance Account*" means the account so designated in the Master Trust Indenture to which loans funded by the Drinking Water Revolving Fund shall be credited.

"*Eligible Project Costs*" means, whether incurred before or after the date of this Loan Agreement, such portion of the Costs as is disbursed by the Authority for the benefit of the Local Borrower. The Local Borrower and the Authority acknowledge that the actual Eligible Project Costs for the Project have not been determined as of the effective date of this Loan Agreement. The final Eligible Project Costs shall be established after all disbursements have been made.

"*Event of Default*" means any occurrence or event specified in Section 5.1 hereof.

"*Indian Tribe*" has the meaning given that term by the Authority Act, currently: any Indian tribe, band, group or community that is recognized by the United States Secretary of the Interior and that exercises governmental authority within the limits of any Indian reservation under the Jurisdiction of the United States government notwithstanding the issuance of any patent and including rights-of-way running through the reservation.

"*Loan*" means (a) during the Construction Period, the commitment to lend to the Local Borrower the Estimated Eligible Project Costs set forth in this Loan Agreement (as it may be amended or revised from time to time), and (b) thereafter, the amount of money equal to the Eligible Project Costs which is actually loaned to the Local Borrower pursuant to this Loan Agreement.

"*Loan Agreement*" or "*Agreement*" means this Loan Agreement, including the Exhibits and these Standard Terms and Conditions attached to this Loan Agreement, as it may be supplemented, modified or amended from time to time in accordance with the terms hereof.

"*Loan Closing*" means the date of execution and delivery of this Loan Agreement.

"*Loan Repayment Date*" means the payment dates commencing and ending on the dates set forth in this Loan Agreement.

"*Loan Repayments*" means the payments payable by the Local Borrower pursuant to this Loan Agreement.

"*Local Borrower*" means the Political Subdivision or Indian Tribe that is a party to and is described in the first paragraph of this Loan Agreement.

"*Master Trust Indenture*" means and includes the Master Trust Indenture dated as of August 1, 1999, as supplemented, and any comparable or related document, pursuant to which the Authority issues Authority Bonds.

"*Political Subdivision*" has the meaning given that term by the Authority Act, currently: a county, city, town or special taxing district authorized by law to construct wastewater treatment facilities.

"*Project*" is the project described in Section 2.1 of the Loan Agreement, all or a portion of the Cost of which is financed from the proceeds of the Loan.

"*Repayment Period*" means the period over which the principal amount of the Loan will be repaid which period begins and ends on the dates set forth in this Loan Agreement.

"*Repayment Principal Amount*" means the amount the Authority agrees to loan to the Local Borrower pursuant to this Loan Agreement or such lesser amount of actual Eligible Project Costs as represents the aggregate amount of the Loan actually made pursuant to this Loan Agreement.

"Reserve Fund Surety" means a surety bond, insurance policy, letter of credit or similar arrangement representing the irrevocable obligation of the issuer thereof to pay to or at the direction of the Local Borrower an amount up to the Reserve Requirement as set forth in Exhibit A.

"*Safe Drinking Water Act*" means the Federal Safe Drinking Water Act (P.L. 93-523; 88 Stat. 1660; P.L. 96-190; 91 Stat . 1393; P.L. 104-182; 110 Stat. 1613), as amended in 1996.

"*Source of Repayment*" means the "source of repayment" set forth in this Loan Agreement as defined in Exhibit D.

"*State*" means the State of Arizona.

"*System*" means the "System" as defined in Section 2.2 of the Loan Agreement.

"Tax-Exempt Obligation" means any obligation or issue of obligations (including bonds, notes and lease obligations treated for federal income tax purposes as evidences of indebtedness) the interest on which is excluded from gross income for federal income tax purposes within the meaning of Section 150 of the Code, and includes any obligation or any investment treated as a "tax-exempt bond" for the applicable purpose of Section 148 of the Code

"*Trustee*" means the Trustee appointed by the Authority pursuant to the Bond Documents and its successor or successors and any other corporation which may at any time be substituted in its place as Trustee pursuant to the Bond Documents.

Terms not otherwise defined herein shall have the meanings ascribed to them in Exhibit D to the Loan Agreement.

Section 8.2 **Rules of Interpretation**. For all purposes of this Loan Agreement, except as otherwise expressly provided or unless the context otherwise requires:

(a) Words of one gender include the corresponding words of other genders; words of neuter include both genders; and words in the singular include words in the plural and vice versa.

(b) Words indicating persons, parties, or entities (and the like) include firms, associations, partnerships (including limited partnerships), limited liability companies (and the like), corporations, trusts and other legal entities, including public and governmental bodies, as well as natural persons.

(c) References to a statute refer to the statute, as amended, and any successor statute, and to all regulations promulgated under or implementing the statute or successor statute, as in effect at the relevant time.

(d) References to a governmental or quasi-governmental entity or representatives thereof also refer to an entity that succeeds to the functions of the governmental or quasi-governmental entity and representatives thereof.

(e) Headings preceding sections of text and any table of contents are solely for convenience of reference and are not part of this Loan Agreement and are not to affect its meaning, interpretation or effect.

(f) Actions permitted under this Loan Agreement may be taken at any time and from time to time in the actor's sole discretion.

(g) The word "including" means "including, but not limited to" and the word "include" means "include, among others."

(h) The terms "hereby," "hereof," "herein," and "hereunder" (and the like) refer to this Loan Agreement.

(i) Indications of time of day mean local time in Phoenix, Arizona.

(j) This Loan Agreement shall be governed by and construed in accordance with the applicable law of the State of Arizona, except for its conflict of law rules and except as preempted by federal.

Article 9 List of Federal Laws and Authorities

By Section 5.4 and Section 5.5 of Exhibit B to the Loan Agreement, the Local Borrower agrees that the Project will comply with applicable provisions of the following federal laws and authorities:

Environmental:

1. Archaeological and Historical Preservation Act of 1974, PL 93291.

2. Clean Air Act, 42 U.S.C. 7506(c).

3. Clean Water Act, Titles II, IV, and V, Pub. L. 92-500, as amended.

4. Coastal Barrier Resources Act, Pub. L. 97-348.

5. Coastal Zone Management Act, Pub. L. 92-583, as amended.

6. Endangered Species Act 16 U.S.C. 1531, et seq.

7. Executive Order 11593, Protection and Enhancement of the Cultural Environment.

8. Executive Order 11988, Floodplain Management.

9. Executive Order 11990, Protection of Wetlands.

10. Farmland Protection Policy Act, 7 U.S.C. 4201 et seq.

11. Fish and Wildlife Coordination Act, PL 85-624, as amended.

12. Magnunson-Stevens Fishery Conservation and Management Act, Pub L. 94-265

13. National Historic Preservation Act of 1966, PL 89-665, as amended.

14. Safe Drinking Water Act, section 1424(e), PL 92-523, as amended.

15. Wild and Scenic Rivers Act, PL 90-542, as amended.

16. Environmental Justice, Executive Order 12898.

Economic:

1. Demonstration Cities and Metropolitan Development Act of 1966, PL 89-754, as amended.

2. Section 306 of the Clean Air Act and Section 508 of the Clean Water Act, including Executive Order 11738, Administration of the Clean Air Act and the Federal Water Pollution Control Act with Respect to Federal Contracts, Grants, or Loans.

Social Legislation:

1. Age Discrimination Act, PL 94-135.

2. Civil Rights Act of 1964, PL 88-352, Title VI.

3. Executive Order H 246, Equal Employment Opportunity.

4. Participation by Disadvantaged Business Enterprises in Procurement Under Environmental Protection Agency (EPA) Financial Assistance Agreements .

5. Rehabilitation Act of 1973, PL 93, 112 (including Executive Order 11914 and 11250).

6. Section 13 of PL 92-500; Prohibition against sex discrimination under the Federal Water Pollution Control Act.

7. Section 129 of the Small Business Administration Reauthorization and Amendment Act of 1988, Pub. L. 100-590.

8. The Drug Free Workplace Act Of 1988, Pub. L. 100-690.

Miscellaneous Authority:

1. Anti-Lobbying Provision (40 CFR Part 30) and New Restrictions on Lobbying, Section 319 of Pub. L. 101-121

2. Executive Order 12549 - Debarment and Suspension.

3. Uniform Relocation and Real Property Acquisition Policies Act of 1970, PL 91-646.

*****

Project Finance Application
City of Surprise
CW 018-2022

WATER INFRASTRUCTURE
FINANCE AUTHORITY OF ARIZONA

Arizona's Source for Water and Wastewater Financing

Section 1: Applicant Information

1.1 Name of Applicant: City of Surprise

1.2 Mailing Address and/or Principal Place of Business:

Surprise City Hall
Attention: Water Resource Management
16000 North Civic Center Plaza
Surprise, AZ 85374

1.3 PWS Number (DW only): AZ0407500
Community or Non-Community System (DW only): NA
AZPDES permit number: AZG-2021-002
APP permit number: 102478.

1.4 E-Verify Documentation attached: __X___ Yes ____ No *(if no, please explain)*

1.5 DBE (MBE/WBE) Certification of Positive Effort signed and attached:
X Yes ____ No *(if no, please explain)*

1.6 UEI Number: 02-164-8936
The Unique Entity ID (UEI) Number is a unique identification number provided by SAM.gov. To obtain an UEI number access the website https://sam.gov/content/entity-registration.

1.7 Designated Contact Person *(for all matters relating to the submission of this application)*

Name: Michael Boule Title: Asst. Director

Telephone: 623-222-7040 FAX: NA

Mailing Address: 16000 North Civic Center Plaza
Surprise, AZ 85374

E-Mail Address: Michael.boule@surpriseaz.gov

1.8 Authorized Representative *(individual authorized by applicant to execute assistance agreements)*

Name: Andrea Davis, CPA Director Title: City of Surprise, Finance

Telephone: 623-222-1853 FAX: NA

Mailing Address: 16000 North Civic Center Plaza
Surprise, AZ 85374

E-Mail Address: andrea.davis@surpriseaz.gov

1.9 Officers of the Organization

Members Name	Title	Term of Position	Time in Position
Skip Hall	**Mayor**	**4**	**4**
Aly Cline	**Vice Mayor**	**4**	**2**
Roland Winters	**Councilman**	**4**	**8**
Patrick Duffy	**Councilman**	**4**	**5**
Chris Judd	**Councilman**	**4**	**4**
Ken Remley	**Councilman**	**4**	**7**
Jack Hastings	**Councilman**	**4**	**2**

1.10 Professional Services

A. Project Engineer: Water Works Engineers, John Matta, PE

Mailing Address: Water Works Engineers, LLC
7500 N Dobson Rd, Suite 200
Scottsdale AZ 85256

E-Mail Address: jmatta@wwengineers.com

Website Address: waterworksengineers.com

Telephone: 480-661-1742 FAX:

B. Financial Advisor: Columbia Capital Management, LLC- Jim Stricklin

Mailing Address: 2942 N. 24th Street, Suite 114

E-Mail Address: jstricklin@columbiacapital.com

Website Address: columbiacapital.com

Telephone: 602-370-7503 FAX:

C. Legal Counsel: In-House City of Surprise Legal Department

D. Bond Counsel: Greenberg Traurig, LLP- Paul Gales

Mailing Address: 2375 East Camelback Road Ste 800
Phoenix, AZ 85016

E-Mail Address: galesp@gtlaw.com

Website Address: gtlaw.com

Telephone: 602-445-8000 FAX:

Section 2 Application Certification and Authorization

The Undersigned, being duly authorized agent(s), principal(s), and officer(s) of the proposed borrower ("Applicant"), requests that the Water Infrastructure Finance Authority of Arizona ("WIFA") accept this Project Finance Application and related addendums ("Application") for review. Applicant hereby acknowledges that the Application includes the information contained herein, the attachments hereto and the information previously or subsequently provided to WIFA. Applicant certifies that the Application is accurate and complete. Applicant understands that any material misstatement or misleading statement herein is cause for denial or rescission of any approval or assistance received in connection with this Application.

Applicant further authorizes WIFA, as it may deem appropriate, to obtain or to furnish and release all or any portion of the Application to all sources for financial or technical assistance, in its efforts to promote and make a determination on this Application for assistance. Applicant further agrees that WIFA shall not be held liable for any assistance or advice given by any such referral entity. It is further understood that WIFA is held without liability or any loss whatsoever that might be incurred by Applicant in any business or personal relationship that may be established in any activity Applicant should hereinafter undertake.

Applicant acknowledges that WIFA, its directors, officers, employees, auditors, counsel, agents, including, but not limited to Project Finance Committee members ("WIFA Representatives"), are in possession of, or may access financial or other information concerning Applicant, or any of Applicant's principals, guarantors, subsidiaries or affiliates, and that such information may be shared in the consideration of the Application. Applicant consents to the disclosure of such information among WIFA Representatives and releases WIFA and WIFA Representatives from any and all claims and causes of action that Applicant may have against WIFA or WIFA Representatives arising out of such disclosure and the consideration and disposition of the application.

Applicant hereby acknowledges that WIFA does not guarantee any specific performance and that all approvals will be in writing and subject to the terms and conditions set forth in a commitment letter signed by an officer of WIFA.

Signature: Andrea Davis Digitally signed by Andrea Davis Date: 2022.11.07 10:55:56 -07'00' Date: _____

Title: Finance Director

Project Data Addendum

Enter detailed information on each individual project financed by the WIFA and its environmental benefits.

1. **Project Details**
   Describe the proposed project providing enough information to allow an uninformed person to understand the scope and location of the project.

   A. Describe problem(s) this project will resolve in detail

   The City of Surprise will be increasing the capacity of the City's primary wastewater treatment facility to incorporate a more modern, more efficient, process thus resulting in additional treatment plant capacity. The treatment plant is located at the southeast corner of Cactus Road and Litchfield Road in Surprise, Arizona. By law, once a wastewater treatment plant has reached 80% of its permitted capacity, the utility must initiate the expansion of the facility. The City of Surprise is currently operating at 75% of the permitted capacity; therefore, it is time to begin the expansion process.

   B. Describe the proposed solution(s) in detail including the following information:
   a. the proposed facility improvements;
   b. construction activities;
   c. expected project benefits;

   The primary scope associated with the facility improvements focuses on increasing aeration within the existing oxidation ditches to accommodate higher nutrient loading. The aeration will be accomplished via blowers and fine air diffusers. The construction activities will include the construction of a new blower building, mechanical air-distribution piping, electrical upgrades, the removal of aeration paddles, and ancillary grading and drainage improvements. The project is designed to implement a more efficient wastewater treatment process that will result in increased plant capacity and greater electrical power efficiency.

   C. Describe the overall project area

   The project area will be confined to the City's existing SPA 1 Water Reclamation Facility. The City's SPA 1 facility sits on 110 acres of property at the southeast corner of the City of Surprise. The project improvements will be adjacent to the existing treatment process structures and will not require the disruption of any previously undisturbed areas.

   D. Describe the project location, including county, latitude and longitude, and/or Township, Range, Section

   The SPA1 Capacity Increase and Enhancement project will be located at 13663 W Cactus Road, Surprise, Az 85379. The City of Surprise is located in the northwest corner of the Greater Phoenix area, in the County of Maricopa.

Latitude/Longitude of project (decimal degrees): 33.59221, -112.35376
S/T/R: 22 3N 1W

E. Provide the following materials:

☒ Service area map
The service area should be clearly defined on the map, and existing and proposed facilities associated with the project as well as the overall project area should be clearly identified on the map.

☒ Schematic of the existing system

☐ Detailed budget table

2. Need Categories

Select the category(ies) that applies to this project and report the estimated dollar amount of the loan that will fund each category.

Need	Estimated Dollar Amount
Secondary Treatment (I)	$25,850,000
Advanced Treatment (II)	$
Infiltration/Inflow Correction (IIA)	$
Sewer System Rehabilitation (IIIB)	$
New Collector Sewers (IVA)	$
New Interceptors (IVB)	$
Recycled Water Distribution (X)	$9,050,000
Stormwater (VI)	$
Non-point Source (VII)	$
Individual/Decentralized Treatment (VII)	$

3. Engineering Documentation

A. Estimated Project Schedule

Include Month and Year – Estimated dates are acceptable.

Please submit all approval documentation

Task	Scheduled Date
Planning, Design and Specifications Completion	April 2023
MCESD Approval to Construct	April 2023
Advertisement for Bids	Completed CMAR Selected
Construction Commencement	July 2023
Construction Completion	June 2025
Discharge Authorization (ADEQ) / Approval of Construction	August 2025
Initiate Operation	September 2025

B. Work Completed to Date:
Indicate what has been completed to date with the planning, design, and/or construction for the project:

☒ Selection of Engineer: Water Works Engineers has been selected.

☒ Has an engineering cost estimate been submitted for this project? X Yes ___No

☒ If yes, provide the Engineer's Opinion of Probable Cost.
☐ If no, provide an itemized table that includes estimated costs.

☐ Date anticipated bids are expected: The Guaranteed Maximum Price from the selected Construction Manager at Risk is expected in early 2023.

☐ Engineering services completed to date: Conceptual Design, 30%, and 60% Design has been completed. These plans include civil, mechanical, structural and electrical.

☒ Submit electronic copies of the following (if applicable):
- ☒ Capital Improvement Plan (See WaterWorks Design Report)
- ☒ Project Feasibility Studies (See WaterWorks Design Report)
- ☒ Preliminary Engineering Report, Design Concept Report (See WaterWorks Design Report)
- ☒ Plans and Specifications (See Drawings and Specifications)
- ☒ Related Technical Data (See Specifications and Procurement Packages)
- ☒ Bid Documents (Blower and Jet Aeration Procurement Packages)
- ☒ Cost Estimates (See Tables below and attached breakdown by Spec Divisions and Process Area)

4. Licenses and Permits
List local, state, and federal licenses and permits required for the proposed project. *(typical permits include ATC/AOC/NOI)*

Licenses/Permits	Date Expected/Approved
Approval to Construct (MCESD)	May 2023
City of Surprise Building Permit	May 2023
Aquifer Protection Permit (ADEQ)	May 2023

5. Contractor Selection

Have you selected a Contractor(s)? ☒ Yes ☐ No *If "Yes," summarize the bidding process and provide ALL bid tabulation information. If "No," on what date will the Contractors be selected?*

The Procurement Division published the CMAR (Construction Manager at Risk) solicitation on 3/31/2022 and 4/07/2022 in the AZ Business Gazette and the City of Surprise website. A pre-submittal meeting and site visit was completed on 4/21/2022 and Questions were due by 04/28/2022, with submittals due by 05/05/2022 at 11:00 am. The CMAR included evaluation criteria that would be used to evaluate all the SOQs (Statement of Qualifications). Three SOQs were received by the due date. The sealed submittal packages were publicly opened on the submittal due date and the tabulation of proposals received was posted to the website. No proposals were received after the 11:00 am solicitation deadline. The evaluation committee reviewed all responsive proposal based on the established evaluation criteria. The evaluation committee scored and ranked the proposal and determined that 3 firms would be shortlisted and invited for interviews. After interviews were conducted, score sheets were submitted, and Felix Construction was selected for award.

6. Project Funding Sources & Uses

Use the following table to accurately represent how loan funds will be utilized. Do not edit the line items or add additional lines. This budget table will be used for loan disbursement requests once loan is executed.

Uses by Budget Item	WIFA Funding	Local Funding	Other: _____	Total By Use
Planning				
Design & Engineering		$718,294		
Legal/Debt Authorization	$35,000			
Financial Advisor	$50,000			
Land/System Acquisition				
Equipment/Materials	$23,935,000			
Construction/Installation/Improvement	$10,000,000			
Inspection & Construction Management	$900,000			
Project Officer				
Administration	$30,000			
Staff Training	$50,000			
Capitalized Interest				
Other				
Total by Source	$35,000,000	$718,294		
Total for Project			$35,718,294	

Note: The borrower is responsible for obtaining a legal opinion for the loan closing documents. Associated costs may be included in the loan.

7. Project Costs Expended to Date: $

Will you seek reimbursement for Project Costs Expended to Date? ☐ Yes ☒ No

If "Yes," identify the costs and explain why WIFA should reimburse these costs.

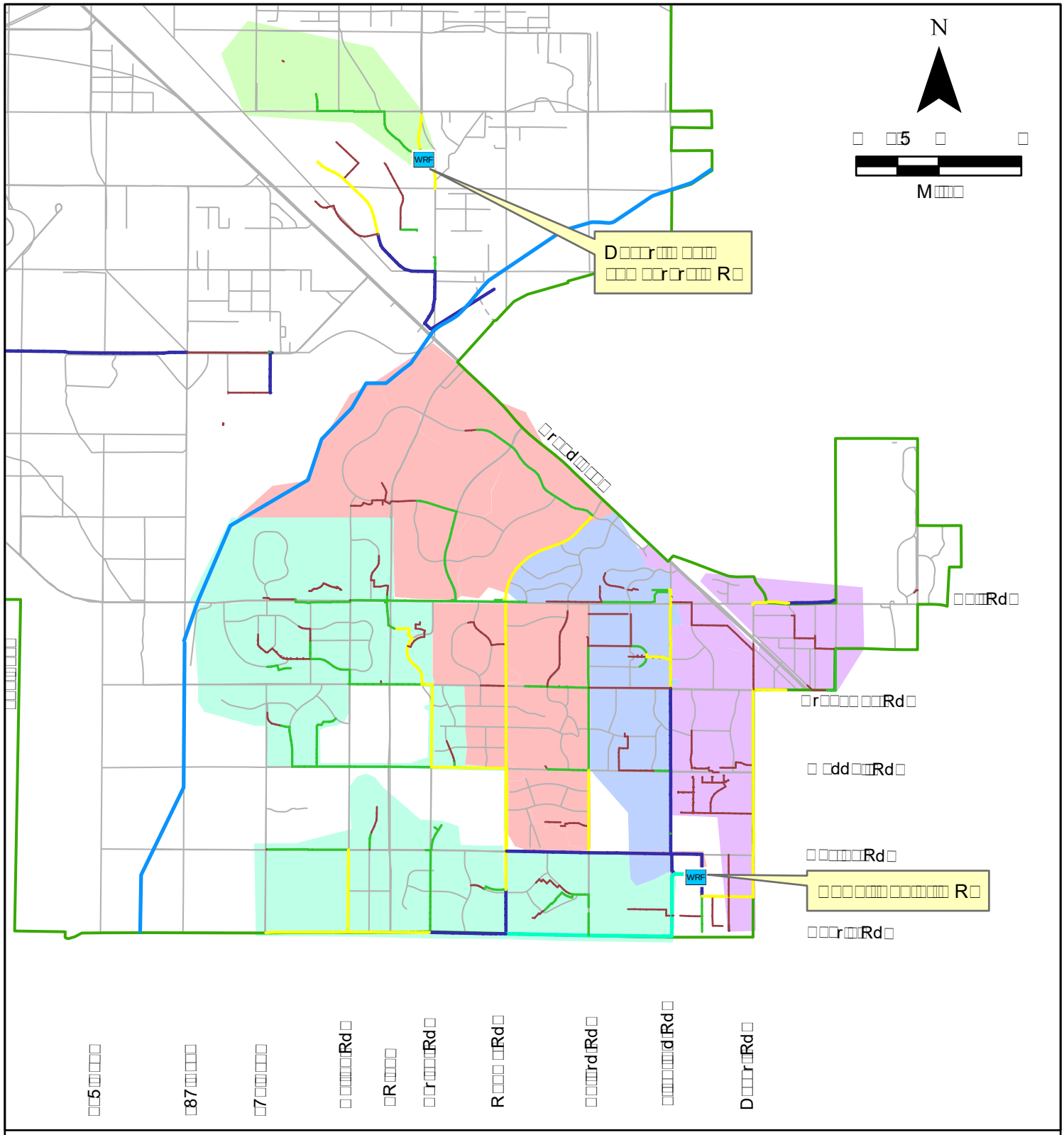
N
WRF
WRF
Rd
Rd
Rd

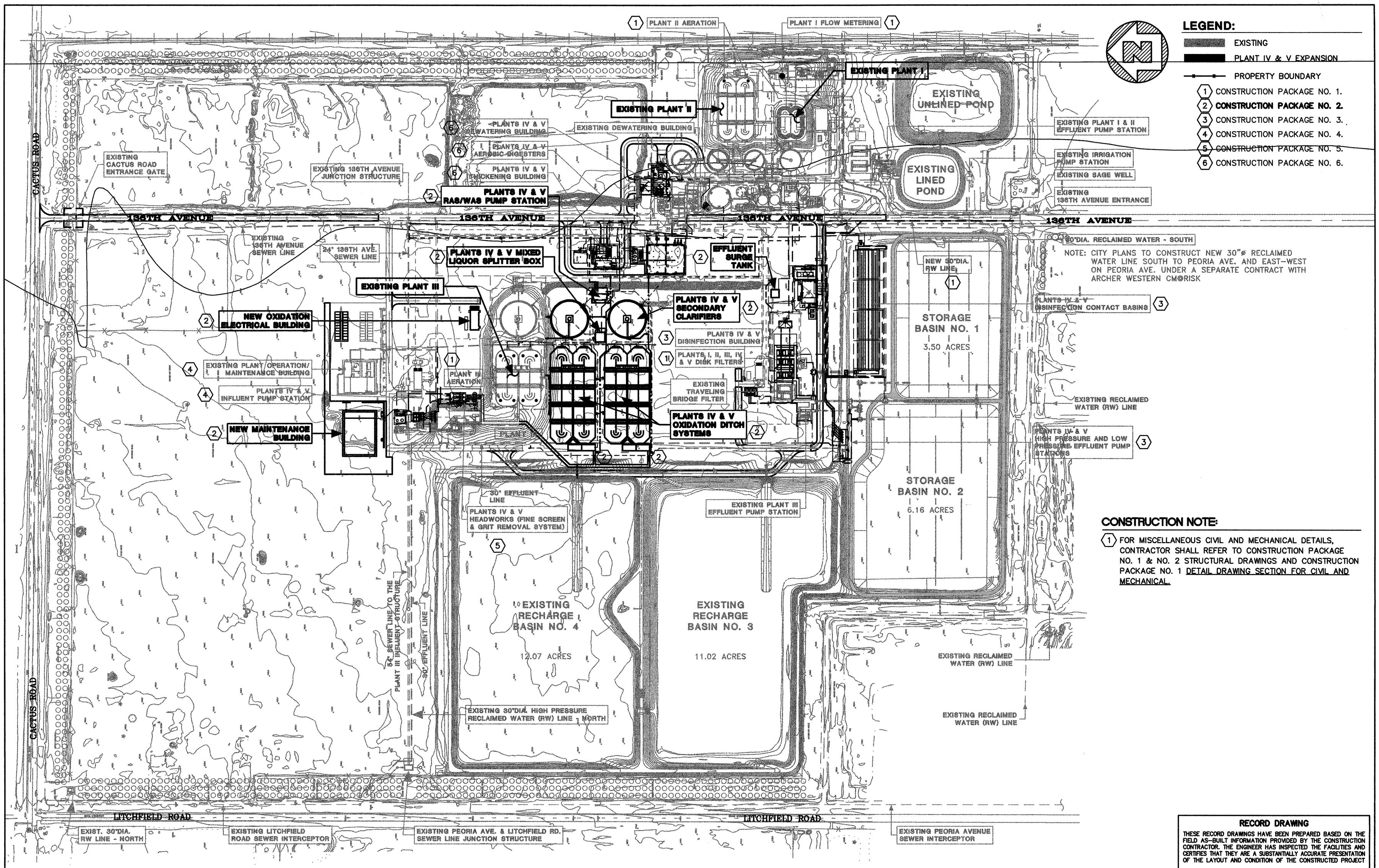

CONSTRUCTION NOTE:

1 FOR MISCELLANEOUS CIVIL AND MECHANICAL DETAILS, CONTRACTOR SHALL REFER TO CONSTRUCTION PACKAGE NO. 1 & NO. 2 STRUCTURAL DRAWINGS AND CONSTRUCTION PACKAGE NO. 1 DETAIL DRAWING SECTION FOR CIVIL AND MECHANICAL.

RECORD DRAWING

THESE RECORD DRAWINGS HAVE BEEN PREPARED BASED ON THE FIELD AS-BUILT INFORMATION PROVIDED BY THE CONSTRUCTION CONTRACTOR. THE ENGINEER HAS INSPECTED THE FACILITIES AND CERTIFIES THAT THEY ARE A SUBSTANTIALLY ACCURATE PRESENTATION OF THE LAYOUT AND CONDITION OF THE CONSTRUCTED PROJECT

RT ENGINEERS International
3201 North 16th St.-Ste. 15 ◆ Phoenix, Arizona 85016
phone (602) 222-6898 fax (602) 222-6640

DRAWN BY: ETS
CHECKED BY:
ENG'R.:
APP'VD. BY:

REVISIONS				
REV.	DESCRIPTION	BY	DATE	APP
	RECORD DRAWING	ETS	8/5/08	

SEAL 1: RECORD DRAWING 26883 RAJENDER THAKUR NOT FOR CONSTRUCTION

SEAL 2:

SURPRISE ARIZONA

City of Surprise
WATER SERVICES DEPARTMENT
SPA 1, PLANT IV AND PLANT V 8.0 MGD WRF EXPANSION PROJECT

DATE OF LAST EDIT: 2.18.06
BY: ETS
SCALE: NTS
CITY INDEX NO.
JOB NO.
TITLE: SPA 1, PLANT IV & PLANT V 8.0 MGD EXPANSION PROJECT SITE MASTER PLAN
DWG. NO. 2C-1
SHEET _____ OF _____

D:\CoS-Plnt4\v2c-01.dwg, Layout1, 9/27/2008 11:22:43 AM, East Sailo, Acrobat Distiller-FULL SIZE 24x36.pc3, PostScript Custom Page Size, 1:1

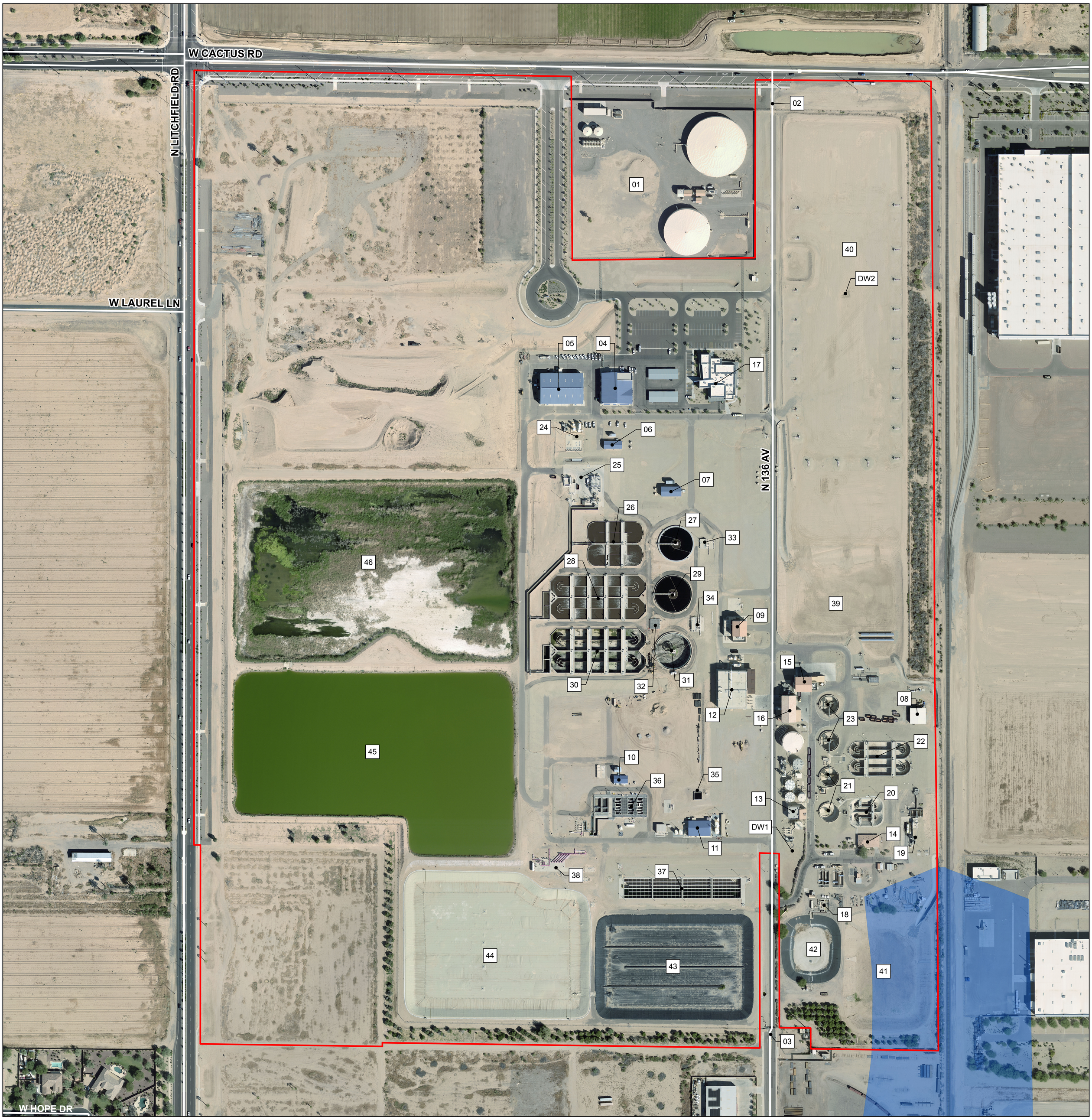

Key

SPA1 WRF Site Boundary

FEMA Floodplain (Flood Zone A)

DW1. Drywell # 1 ADEQ - Reg # xxxxx

DW2. Drywell # 2 ADEQ - Reg # 43279

01. Rancho Gabriela WSF

02. North Gate - Cactus Road

03. South Gate - 136th Avenue

04. Building 4 - Plant Operations Building

05. Building 5 - Plant Maintenance Building

06. Bulding 6 - Plant 3 4 and 5 Headwords MCC

07. Building 7 - Plant 3 4 and 5 Oxidation Ditch and Clarifiers MCC

08. Bulk Chemical Storage Shed

09. Building 9 - Centrifuge Thickening Building New

10. Building 10 - Disk Filters and Effluent Pump Station MCC

11. Building 11 - Desinfection Building

12. Aerobic Digesters and Odor Scrubbers

13. Building 13 - Belt / Drum Thickening Building - Not in Service

14. Building 14 - Plant Laboratory Building

15. Building 15 - Dewatering Centrifuge Building - New

16. Building 16 - Dewatering Centrifuge Building - Old

17. Building 17 - Surprise-GateWay Training Center

18. Plant 1 and 2 Influent Wet Well and Pump Station

19. Plant 1 and 2 Influent Headworks and Odor Scrubbers

20. Plant 1 Oxidation Ditch

21. Plant 1 Secondary Clarifiers

22. Plant 2 Oxidation Ditch

23. Plant 2 Secondary Clarifiers

24. Plant 3 4 and 5 Influent Wet Well and Pump Station

25. Plant 3 4 and 5 Influent Headworks and Odor Scrubbers

26. Plant 3 Oxidation Ditch

27. Plant 3 Secondary Clarifiers

28. Plant 4 Oxidation Ditch

29. Plant 4 Secondary Clarifiers

30. Plant 5 Oxidation Ditch

31. Plant 5 Secondary Clarifiers

32. Mixed Liquor Splitter Box

33. Plant 3 WAS / RAS - Old Not in Service

34. Plant 3 4 and 5 WAS / RAS

35. Effluent Surge Tank

36. Disk Filters Plants 1 thru 5

37. Desinfection Contract Basin

38. Effluent Wet Well and Pump Station

39. Stormwater Retention Basin

40. Vadose Zone Injection Well Field

41. Unlined Pond

42. Lined Pond

43. Storage Basin # 1

44. Storage Basin # 2

45. Recharge Basin # 3

46. Recharge Basin # 4

SURPRISE
ARIZONA

WATER RECLAMATION FACILITY
SPA-1
(SOUTH PLANT)

GENERAL SITE PLAN

Address: 11401 N 136TH AV &
13363 W CACTUS RD, Surprise AZ 85379
Location: T03N R01W Sec22
APN: 501-43-005B
LAT: 33d 35' 13" N
LON: -112d 21' 12" E

0 250 500
Feet

N W E S

Date: 9/20/2018

CITY OF SURPRISE
SPA 1 WRF – Plant Capacity Rerating
Design Report

Date: October 27, 2022

Prepared By: Meghan Wilson, P.E.
John Matta, P.E.

Table of Contents

1. Background 4
2. Objective 6
3. Water Quality Requirements 6
4. Existing Facility Design Criteria 8
   4.1. Facility Information 8
   4.2. Plant Operations 9
   4.3. Plants III, IV, and V Design Criteria 10
5. Influent Characteristics 11
   5.1. Wastewater Influent Flows 11
   5.2. Hydraulic Peaking Factor Analysis 12
      5.2.1. ADEQ Method No. 1 12
      5.2.2. ADEQ Method No. 2 13
   5.3. Wastewater Influent Characteristics 13
   5.4. Wastewater Influent Loading 14
      5.4.1. Design Criteria Comparison 15
6. Process Modeling 15
   6.1. Results Summary 15
   6.2. Recommendation 16
7. Impact on Secondary Clarifiers 17
8. Aeration System 18
   8.1. Aeration Blowers 18
   8.2. Jet Aeration Systems 19
9. Hydraulic Analysis 21
10. Recharge Basin 22
   10.1. Cost Estimate 22
11. Conclusions 23
   11.1. Short Term Improvements 23
   11.2. Long Term Improvements 23

List of Tables

Table 1-1 - Facility Capacity, By Plant 5
Table 3-1 Facility Permits 7
Table 3-2 Anticipated Effluent Discharge Limits 7
Table 4-1– SPA 1 WRF Facility Information 8
Table 4-2– SPA 1 WRF Plants III, IV, and V Design Criteria 11
Table 5-1– Influent Measured Flows (January 2014-December 2017) 11
Table 5-2– Influent Measured Concentrations (January 2014-December 2017) 13
Table 5-3 Wastewater Influent Fractions 14
Table 5-4– Influent Flows and Loading (January 2014-December 2017) 14
Table 5-5– Design Criteria Comparison 15
Table 6-1– Jet Aeration Avg Flow (14.7 mgd) x ADMM Concentration BioWin Model Operating Parameters 16
Table 6-2 Jet Aeration Avg Flow (14.7mgd) x ADMM Concentration BioWin Model Results 16
Table 6-3 Aeration Demand per Oxidation Ditch Summary 16
Table 7-1– Surprise SPA 1 WRF Secondary Clarifier Hydraulic Performance 17
Table 7-2– Surprise SPA 1 WRF Secondary Clarifier Solids Loading Performance 18
Table 8-1 Blowers Design Parameters 19
Table 8-2 Oxidation Ditches Configuration 19
Table 8-3 - Design Criteria 20
Table 8-4 Oxygen Demand by Zone 21
Table 9-1 – Flow Split 21
Table 10-1 Existing Recharge and Storage Basins 22
Table 10-2 Existing Vadose Zone Wells (VZWs) 22
Table 11-1 – Hydraulic Analysis Results – Various Scenarios 24

DRAFT

List of Figures

Figure 1-1 Vicinity Map 4
Figure 1-2 - SPA 1 WRF Site Layout 5
Figure 4-1 – SPA 1 WRF Plant III Oxidation Ditch Schematic 9
Figure 4-2 – SPA 1 WRF Plant IV/V Oxidation Ditch Schematic 9
Figure 5-1 – Peak Hour Peaking Factors Sensitivity Analysis 12
Figure 6-1 BioWin Model Schematic 15
Figure 7-1 - Typical Solids Flux Curve for State Point Analysis 18

Background

The City of Surprise (City) owns and operates the Special Planning Area 1 (SPA 1) Water Reclamation Facility (WRF) located at 11401 N. 136th Avenue, Surprise, Maricopa County, Arizona (near the intersection of 136th Avenue and Cactus Road).

Figure 1-1 Vicinity Map

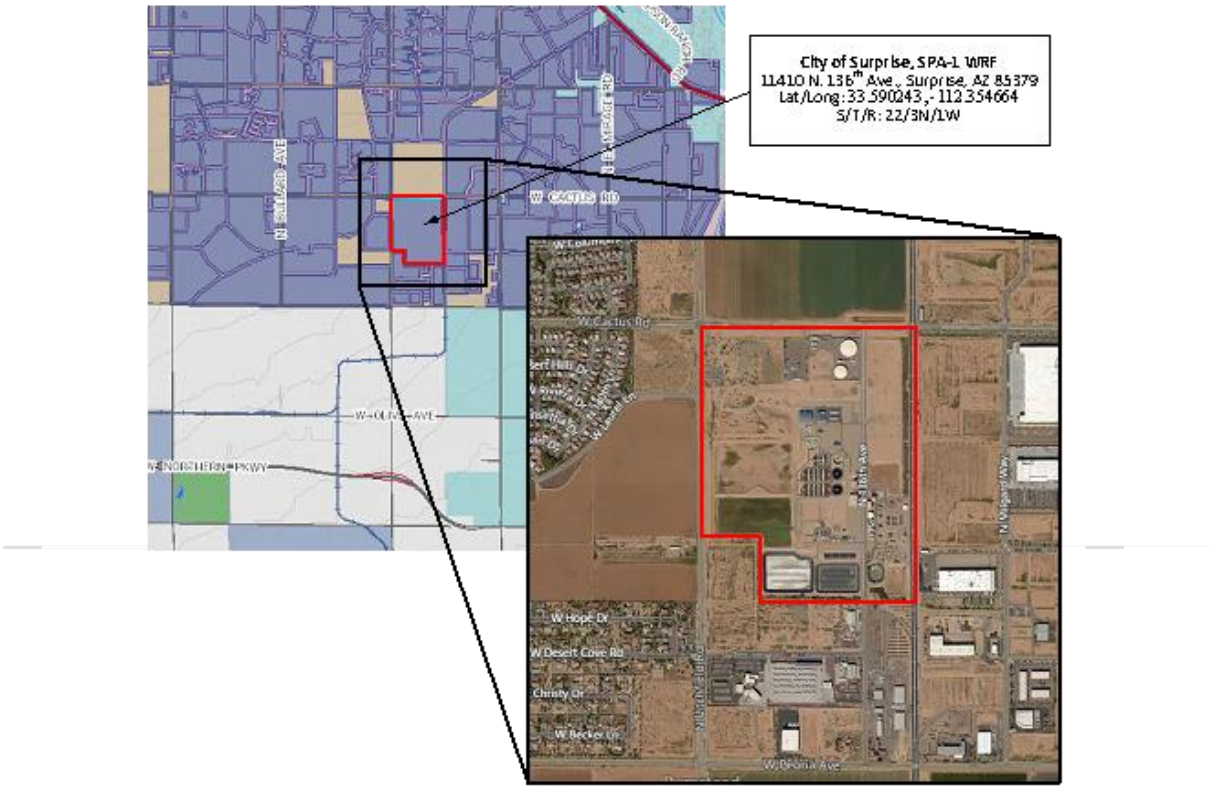

The WRF consists of five individual oxidation ditch systems referred to as: Plant I, Plant II, Plant III, Plant IV, and Plant V. The plants share a common headworks facility that includes screening and grit removal. Each plant consists of secondary treatment via oxidation ditches and secondary clarification. Secondary effluent is then combined and conveyed to disk filtration and chlorine/chloramination disinfection.

The WRF is permitted to operate with a maximum monthly average flow of 16.3 million gallons per day (mgd). The facility was constructed in a phased approach, as detailed below in Table 1-1. The current demand does not exceed the capacities of Plant III, IV, and V; therefore, Plants I and II are currently offline. If demand exceeds the capacities of Plants III, IV, and V then Plants I and II can be brought back online.

Table 1-1 - Facility Capacity, By Plant

Plant	Parameter, Unit		
	Constructed	Initial Capacity[(1)] (mgd)	Permitted Capacity[(1)] (mgd)
Plant I	1994	0.8	0.8
Plant II	1998	2.4	2.7[(2)]
Plant III	2003	4.0	4.8[(2)]
Plant IV	2008	4.0	4.0
Plant V	2008	4.0	4.0
Total	--	--	16.3

[(1)] – Capacity listed in Average Day Maximum Month flow (ADMM)
[(2)] Plants II and III were rerated in 2006

Figure 1-2 illustrates an aerial view of the SPA 1 WRF site showing the five oxidation ditch, secondary treatment trains. The effluent from any combination of one or all of the plants is blended upstream of the tertiary filters and disinfected using chloramination. Treated effluent is used for irrigation or is recharged.

Figure 1-2 - SPA 1 WRF Site Layout

Objective

The City retained Water Works Engineers to investigate the capacity of Plants IV and V and develop expansion scenarios while maximizing the use of existing infrastructure. This report evaluated the following:

- Summarize process modeling results of the current system and impact from possible system modifications
- Recommend rerated flow capacity of each Plant
- Assess various technologies and equipment to improve process at the rerated flow rate
- Provide recommendation and cost estimate for facility modifications

Water Quality Requirements

The SPA 1 WRF currently operates under the following existing or pending permits, as described in Table 3-1.

Table 3-1 Facility Permits

Permit Type	Permit Number	Expiration Date	Purpose
Aquifer Protection Permit (APP)	P-102478	End of Facility Life	Regulates discharges to the local aquifer of Reclaimed Water in accordance with Best Availability Demonstrated Control Technologies (BADCT), as specified in A.A.C. R18-9-B204.
Reuse Permit	-	-	Regulates the practice of reusing Class A+ treated wastewater for beneficial purposes, including recharge and irrigation.

The effluent quality limits dictated by the APP (P-102478) are listed in Table 3-2 along with the effluent quality used for design purposes of the facility expansion.

Table 3-2 Anticipated Effluent Discharge Limits

Effluent Quality	Effluent Limit		
	Design	Alert	Discharge Limit
BOD5 - Monthly Average (mg/L)	8	30	30 (APP)
TSS - Monthly Average (mg/L)	10	N/A	30 (APP)
BOD5 and TSS Removal (%)	>85	N/A	>85 (APP)
Filtered Effluent Turbidity - 24-hour Average (NTU) for Class A+ Reclaimed Water	2	N/A	2.0 (APP)
Filtered Effluent Turbidity - Instantaneous Maximum (NTU) for Class A+ Reclaimed Water	5	N/A	5.0 (APP)
Total Nitrogen - Five-Month Rolling Geometric Mean (mg/L)	8	8 (APP)	10 (APP)
pH (SU)	6 to 9	N/A	6.5 to 9
Fecal Coliform - Single Sample Maximum (CFU or MPN/100 mL)	Non-Detect	Not Established (APP)	23.0 (APP)
Fecal Coliform – Four of Seven Samples in a Week (CFU or MPN/100 mL)	Non-Detect	Not Established (APP)	Non-detect (APP)
WET Testing – Quarterly (TUc)	0	N/A	1.0

Existing Facility Design Criteria

4.1. Facility Information

Table 4-1 details the SPA 1 WRF facility information – including design flow rates and facility geometry. This information was utilized in the process modeling investigation to determine the ultimate rerating capacity.

Table 4-1– SPA 1 WRF Facility Information

Parameter, Value	Plant III[1]	Plant IV[2]	Plant V[2]
Design Criteria			
Peak Flow Rate, mgd	10	10	10
ADMM Flow Rate, mgd	4.8	4	4
ADMM Flow Rate, Total Plants III, IV and V, mgd	12.8		
Hydraulic Peaking Factor	2.5	2.5	2.5
Oxidation Ditch			
No. Ditches	2	2	2
No. Passes	2	2	2
Ox Ditch Length, ft/pass	183	315	315
Width, ft/pass	36	36	36
Normal Depth	12.5	11.5	11.5
Aeration Rotors			
No. Units – No per Ditch / Total per Plant	4 / 8	8 / 16	8 / 16
Length, m (ft.)	9 (29.5)	9 (29.5)	9 (29.5)
Power, HP	75	75	75
Additional Aeration			
No. Jet Aerators	4	0	0
HP	60	0	0
Secondary Clarifier			
No. Units	1	1	1
Diameter, ft.	120	125	125
Side Water Depth, ft.	18	18	18
Surface Area (each), sq ft.	11,310	12,272	12,272

(1) Plant III 4 mgd Modular Expansion Project Surprise South Water Reclamation Facility, RT Engineers International, February 2001
(2) Special Planning Area No. 1 (SPA 1) Regional Water Reclamation Facility Plant IV and Plant V 8.0 mgd Expansion Project, RT Engineers International, December 19, 2005.

4.2. Plant Operations

Each plant consists of two Kruger Oxidation Ditch Systems, designed to achieve nitrification and denitrification within the same ditch. Aeration is achieved via surface mounted brush aerators. Plant III includes additional aeration, via jet aerators within the oxidation ditch bends, to supply additional oxygen. Figure 4-1 and Figure 4-2 illustrate schematics for the Oxidation Ditch Systems.

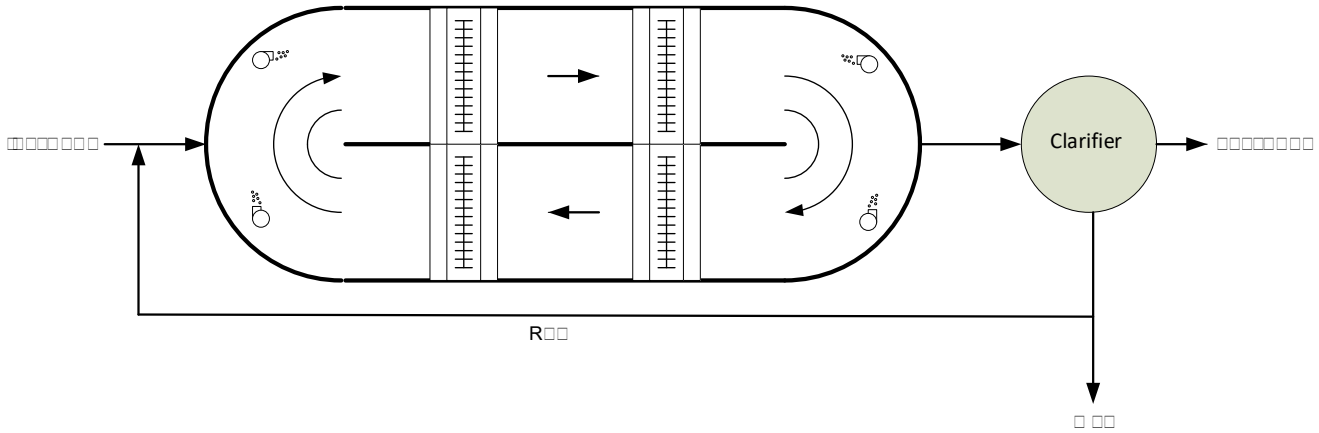

Figure 4-1 – SPA 1 WRF Plant III Oxidation Ditch Schematic

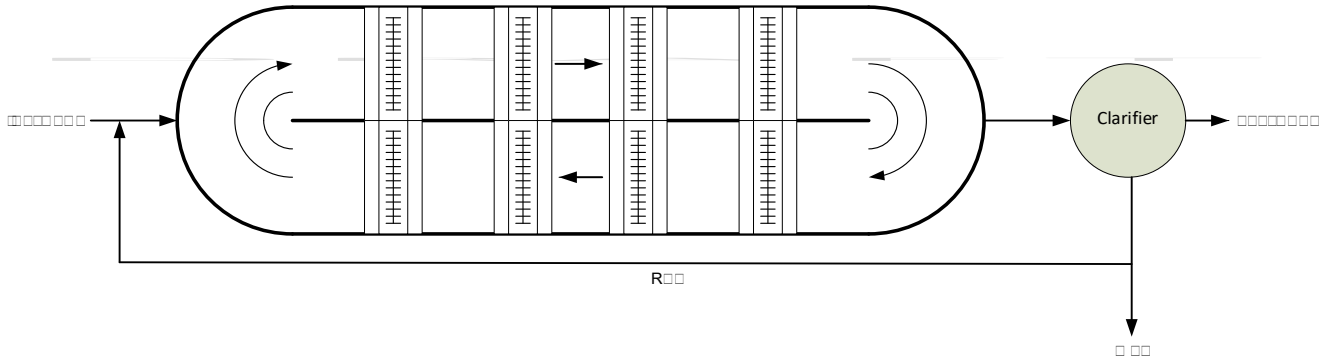

Figure 4-2 – SPA 1 WRF Plant IV/V Oxidation Ditch Schematic

Plants IV and V are a proprietary process developed by Kruger and operate under the BioDenitro mode. This process is intended to provide nutrient removal (mainly nitrogen) without a separate anoxic tank. The dual oxidation ditches can be operated in parallel or in series and each ditch can be either aerated or mixed without air to provide anoxic conditions. The parallel and in series modes are illustrated in Figures xx and yy below.

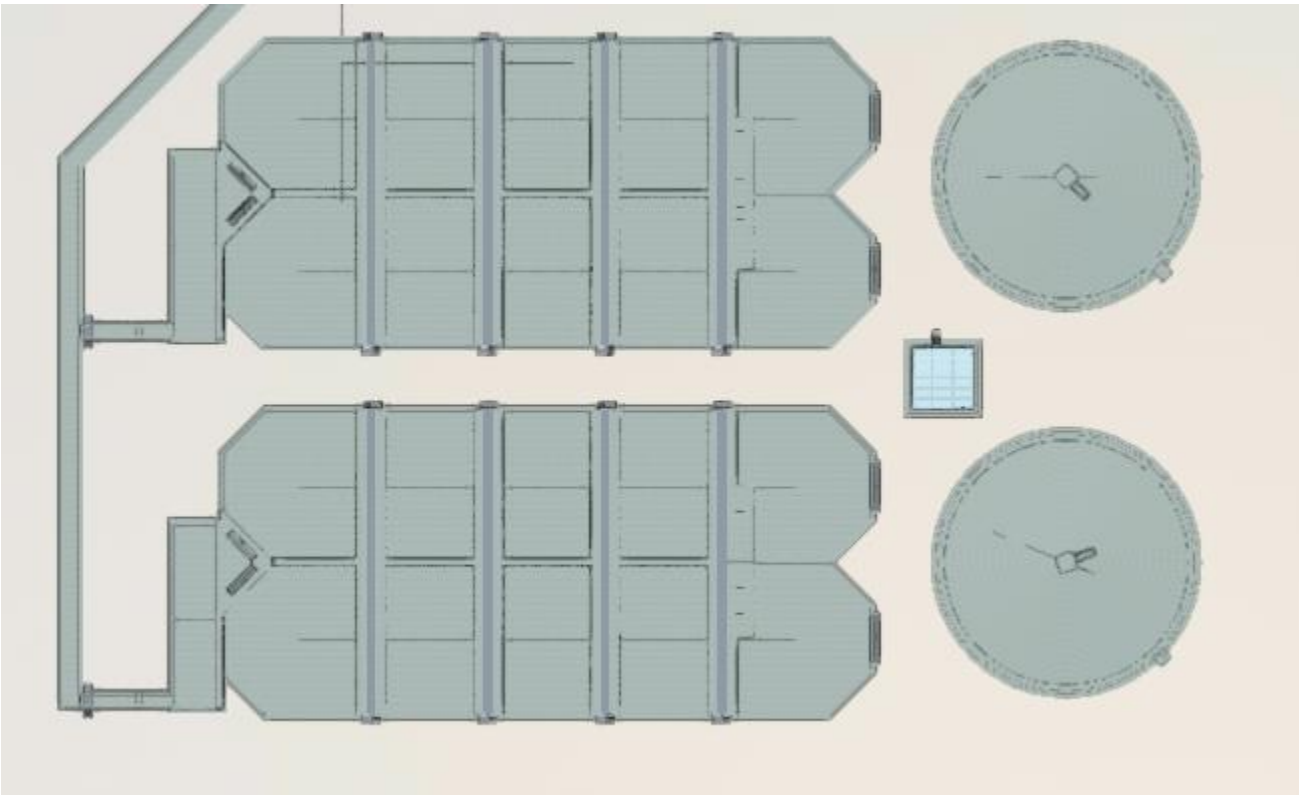

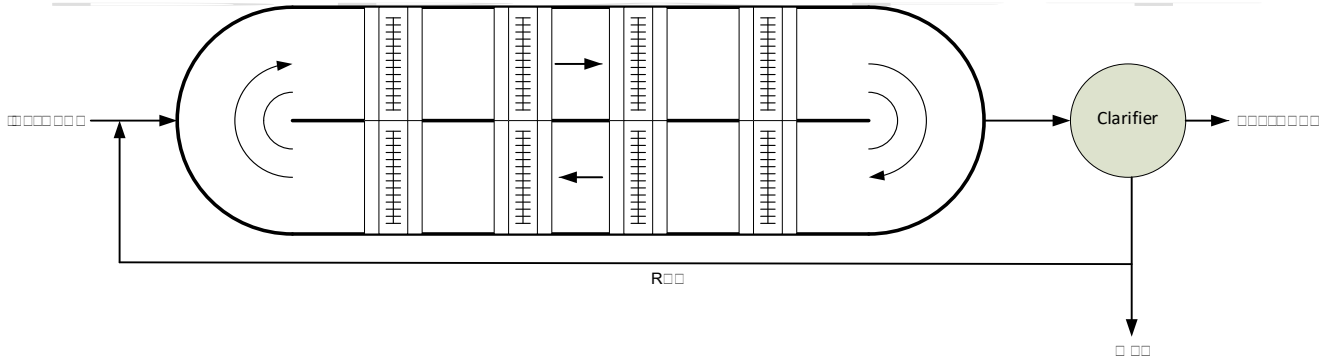

4.3. Plants III, IV, and V Design Criteria

Table 4-2 shows the original design criteria utilized for Plants III, IV, and V. Note that the design flow and loading is based on Average Day Maximum Month (ADMM) conditions. The investigation analyzed flow and nutrient parameters utilizing plant data (2014-2017) and compared against the original design criteria. The results of the investigation are shown in Section 5.

Table 4-2– SPA 1 WRF Plants III, IV, and V Design Criteria

Parameter, Unit	Facility	
	Plant III[1]	Plant IV and V[2]
Peak Flow Rate, mgd	10	10
ADMM, mgd	4.0[1] / 4.8[3]	4
Hydraulic Peaking Factor	2.5[1] / 2.08[3]	2.5
ADMM BOD_5, mg/L	264[3]	300
ADMM TSS, mg/L	270[3]	300
ADMM TKN, mg/L	54[3]	72

(1) Plant III 4 mgd Modular Expansion Project Surprise South Water Reclamation Facility, RT Engineers International, February 2001
(2) Special Planning Area No. 1 (SPA 1) Regional Water Reclamation Facility Plant IV and Plant V 8.0 mgd Expansion Project, RT Engineers International, December 19, 2005.
[3] Values may have changed when Plant III was rerated

Influent Characteristics

Three years (January 2014-December 2017) of wastewater influent data was analyzed.

5.1. Wastewater Influent Flows

Table 5-1 summarizes the measured influent flows observed at the SPA 1 WRF facility. The data resulted in an average of 8.17 mgd corresponding to the average annual day (AAD) flow. The 92nd percentile of this data resulted in 9.09 mgd, which can be viewed as the ADMM flow. Note that these influent flows do not include return flows, including centrate return. Dividing the ADMM by the AAD flow results in an ADMM factor of 1.11.

The maximum flow value of 14.09 mgd is documented in the data, which corresponds to the max day flow rate. The Max Day Peaking Factor is determined by dividing the max day flow rate by the AAD flow and was found to be 1.73. Note that hourly flow data was not available to determine the peak hour flow rate for peak hour peaking factor.

Table 5-1– Influent Measured Flows (January 2014-December 2017)

Condition	Parameter, Unit	
	Flow, mgd	Peaking Factor
AAD[1]	8.17	--
ADMM[2]	9.09	1.11 (ADMM:AAD)
Max Day	14.09	1.73 (Max Day:AAD)

(1) Average value of all data
(2) 92nd Percentile of all data.

5.2. Hydraulic Peaking Factor Analysis

ADEQ Method

The plant performance is heavily dependent on the hydraulic flows and peaking factors which can greatly affect the outcome of the rerating analysis. The peak hour peaking factor anticipated in the system can be calculated using the formula shown below from Arizona Department of Environmental Quality (ADEQ) Bulletin No. 11 *Minimum Requirements for Design, Submission of Plans & Specifications of Sewage Works* (Bulletin No. 11):

A sensitivity analysis was performed to determine the gallon per capita per day (gpcd) value associated with the population served by the SPA 1 WRF facility. Figure 5-1 shows the plotted peaking factors that correspond to either 65 gpcd or 100 gpcd utilizing the ADEQ peaking factor equation. After City input, 100 gpcd was selected as the design value for estimating population served by this project.
Utilizing the ADMM peaking factor established in Table 5-1 (1.11) applied to the permitted design capacity of the facility (16.3MGD), the AAD flow rate of 14.7 MGD was used to calculate the peak hour peaking factor with 100 gpcd. The resulting peak hour peaking factor is 2.18.

Figure 5-1 – Peak Hour Peaking Factors Sensitivity Analysis

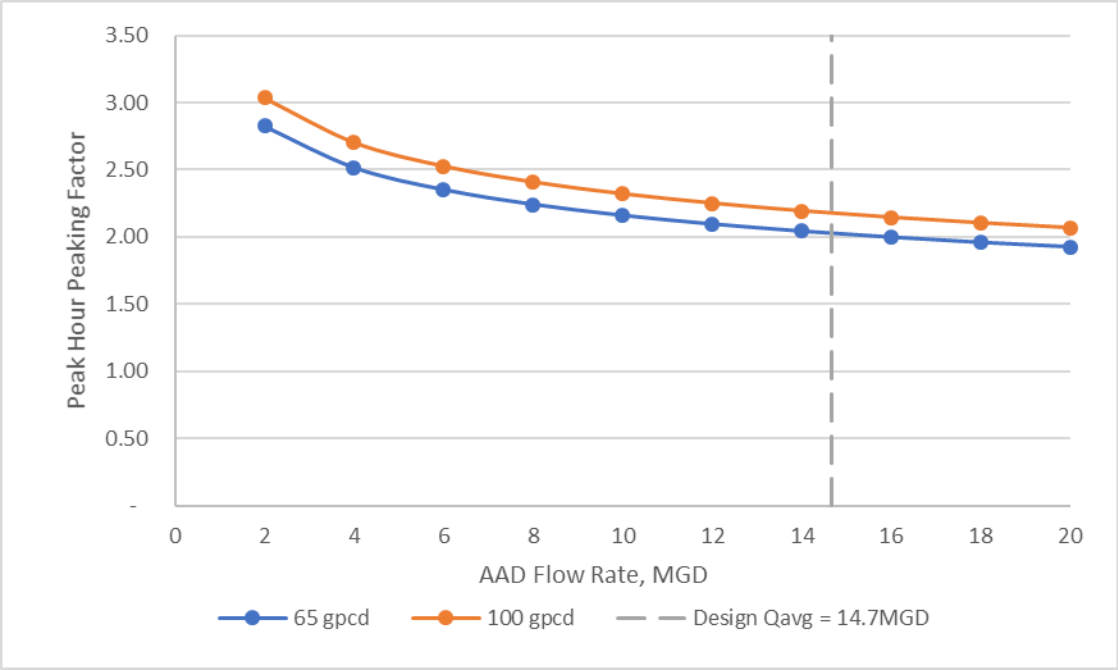

□

□□□□□□**ADE□ M□□□□d N□□□**

Bulletin No. 11 also outlines the following equation to calculate Peak Hour Flow:

M□□□□ □□ □□ □□r□□□□□□ □□r□□ □□□□□ □□r□□□□ □□□□□□5□□M□□□□ □□ □D□□□□□□□ □

This equation can also be used in the following form:

□□□□□ □□r□□ □□□□□□□□ □□r□□5□□M□□D□□□□ □□□□□□□□ □□r□

The Maximum Daily Flow (also called the Max Day) flow factor at this facility, based on the data observed and summarized in Table 5-1, is 1.73. Therefore, utilizing this method, the peak hour peaking factor calculated is 2.59.

5.3. Wastewater Influent Characteristics

Table 5-2 summarizes the measured influent characteristics. The investigation determined the averages and 92nd percentiles (PCT) of all daily measured values. The 92nd percentile statistically is equivalent to the ADMM condition. Certain characteristics, crucial for process modeling, are available using biweekly samples. These samples are collected and sent to a laboratory for more comprehensive analysis. The results of this lab sampling and assumptions are as follows.

Table 5-2– Influent Measured Concentrations (January 2014-December 2017)

Condition	Parameter, Unit					
	COD, mg/L	BOD_5, mg/L	TSS, mg/L	VSS, mg/L	NH_3, mg/L	TKN, mg/L
Average(1)	794	361	318	350	35	52
ADMM(2)	1,034	470	432	443	40	58
(1) Average value of all data (2) 92nd Percentile of all data.						

Fractions of influent parameters are shown in Table 5-3 with typical ranges for domestic wastewater. As shown, the influent at this WRF falls within expected ranges.

Table 5-3 Wastewater Influent Fractions

Ratio	Average	ADMM (92nd PCT)	Typical Range
Ammonia:Total Kieldahl Nitrogen (NH_3:TKN)	0.67	0.69	~0.60
Volatile Suspended Solids: Total Suspended Solids (VSS:TSS)	1.10	1.03	~0.75
COD:BOD_5	2.2	2.2	< 2 Good Biodegradability > 2 presence of poorly biodegradable substances

5.4. Wastewater Influent Loading

Influent loading was determined utilizing four different approaches. Each approach is described below.

- AAD flow X AAD concentration
- ADMM flow X ADMM concentration
- AAD flow X ADMM concentration
- ADMM flow X AAD concentration

The latter two approaches offered better insight into more realistic loading conditions experienced at the facility. The calculated wastewater influent loadings are summarized below in Table 5-4.

Table 5-4– Influent Flows and Loading (January 2014-December 2017)

Condition	Parameter, Unit						
	Flow, mgd	COD, ppd	BOD_5[(3)], ppd	TSS, ppd	VSS, Ppd	NH_3, ppd	TKN, ppd
AAD Flow X AAD Concentration[(1)]	8.17	54,101	24,598	21,668	23,848	2,385	3,543
ADMM Flow X ADMM Concentration[(2)]	9.09	78,388	35,631	32,750	33,584	3,032	4,397
AAD. Flow X ADMM Concentration	**8.17**	**70,454**	**32,025**	**29,436**	**30,185**	**2,726**	**3,952**
ADMM Flow x AAD Concentration	9.09	60,194	27,368	24,108	26,534	2,653	3,942

(1) Average value of calculated monthly averages.
(2) 92nd Percentile of all data.

It is uncommon for the ADMM flow rate to occur simultaneously with the ADMM concentration. This combination may result in an overdesigned facility, however, to confirm the corresponding impact, this report will analyze process impacts based on the following two scenarios:

- ADMM Flow x ADMM Concentration (most conservative approach)
- AAD Flow x ADMM Concentration

Design Criteria

The influent characteristics were compared against the original design criteria. Table 5-5 summarizes the original design criteria and the measured influent results.

Table 5-5– Design Criteria Comparison

Condition	Parameter, Unit (Plant III/Plant IV, V)					
		ADMM Factor	Peaking Factor	BOD_5, mg/L	TSS, mg/L	TKN, mg/L
Original Design Criteria		*	2.50	264/300	270/300	54/72
Measured or Calculated Influent Strength (ADMM)		1.11	2.0	470	432	58
*Not clearly defined in the design documents						

Process Modeling

Process modeling utilizing EnviroSim software was completed for a variety of scenarios to evaluate the impact of various improvements to the oxidation ditches. Operating parameters from 2016 provide by City staff were utilized to calibrate a base model then modifications were made to evaluate the impact on overall effluent quality with varying influent conditions.

6.1. Results Summary

Detailed results are included in Appendix X. The option producing the best results was Scenario A3. This scenario modeled the existing oxidation ditches with a jet aeration system. Figure 6-1 below shows a schematic of the Biowin model.

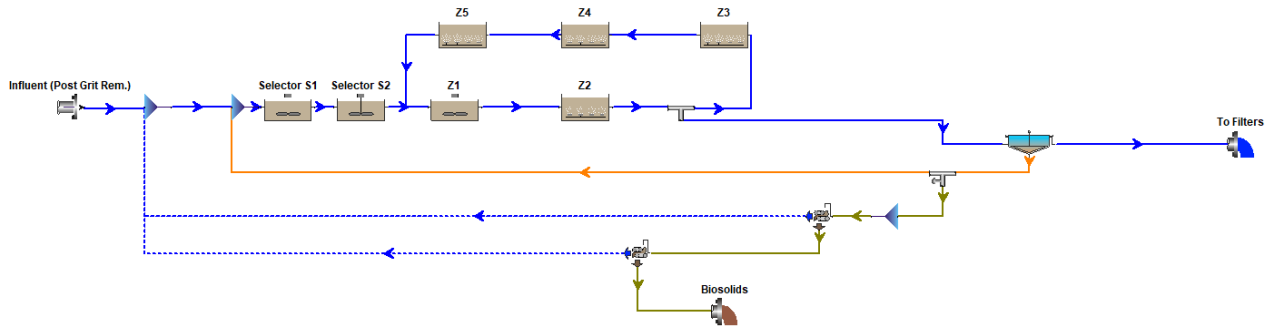

Figure 6-1 BioWin Model Schematic

Operating parameters for this model are shown in the table below.

Table 6-1– Jet Aeration Avg Flow (14.7 mgd) x ADMM Concentration BioWin Model Operating Parameters

BioWin Model	Parameter, Unit			
	Plant IV/V			
	Flow[(1)], mgd	MLSS, mg/L	WAS, mgd	SRT, days
14.7mgd Total to Plants III, IV, and V	10.5mgd	3,000	0.15	7
(1) Flow to Plant IV or V (i.e. two oxidation ditches); flow per oxidation ditch is 2.5mgd				

The BioWin results show that a jet aeration system will supply necessary oxygen demand for nitrification and denitrification to occur within the existing oxidation ditches. Results are shown in the table below.

Table 6-2 Jet Aeration Avg Flow (14.7mgd) x ADMM Concentration BioWin Model Results

Element	Parameter, Unit						
	COD, mg/L	BOD_5, mg/L	TSS, mg/L	TKN, mg/L	NH_3, mg/L	NO_3, mg/L	Total N, mg/L
Influent	1,034	532	391	58	40	0	58
Ox Ditch	4,052	1,193	3,000	235	0.7	3.3	6.9
Effluent to Filters	29.3	1.9	1.5	2.4	0.7	3.3	6.9

A summary of the aeration requirements for this scenario are shown in Table 6-3.

Table 6-3 Aeration Demand per Oxidation Ditch Summary

Element	Parameter, Unit
Oxidation Ditch Volume, MG (Total)	2.1
Total Aerated Volume, MG	1.64
Dissolved Oxygen Setpoint per Aeration Zone, mg/L	2.0
Airflow Rate, scfm (total)	4,072
Oxygen Transfer Rate, lb/hr (total)	533

6.2. Recommendation

Based on the results of the process models, it is recommended that the oxidation ditches remain operating as oxidation ditches in lieu of altering the basins to function as bioreactors in an MLE process. Improvements to the aeration system by installing jet aeration equipment in the Train IV and V basins will provide increased effluent quality at higher flow rates and improve overall performance.

Impact on Secondary Clarifiers

With the increased flows and loading to Plants III, IV, and V it was necessary to perform a state point and hydraulic analysis on the existing clarifiers. **Error! Reference source not found.** Table 7-1 summarizes the results from hydraulic analysis and **Error! Reference source not found.** Table 7-2 summarizes the results from the state point analysis. Note that the flow rates include recycle flows.

Table 7-1– Surprise SPA 1 WRF Secondary Clarifier Hydraulic Performance

BioWin Model	Plant III				Plant IV, V			
	ADMM		Peak		ADMM		Peak	
	Flow, mgd	SOR, gpd/sf	Flow, mgd	SOR, gpd/sf	Flow, mgd	SOR, gpd/sf	Flow, mgd	SOR, gpd/sf
Peaking Factor = 2.5 (Original Design)								
Current Conditions	2.9	256	6.5	572	5.64	230	12.6	513
16.3 mgd	4.8	424	10.7	947	12.1	493	27.0	1,100
16.3 mgd (NH_3 Removal)	3.4	301	7.6	671	13.4	546	29.9	1,219
Peaking Factor = 2.0 (Observed Data)								
Current Conditions	2.9	256	5.2	458	5.64	230	10.1	410
16.3 mgd	4.8	424	8.6	758	12.1	493	21.6	880
16.3 mgd (NH_3 Removal)	3.4	301	6.1	537	13.4	546	23.9	975

According to MOP 8 typical surface overflow rates (SOR) for secondary clarifiers range between 400-700 gpd/sf during average conditions and 1,000-1,600 gpd/sf during peak hour conditions or one basin out of service. The hydraulic analysis results suggest that the existing clarifiers are sufficient for the modeled flow conditions up to 16.3mgd.

Table 7-2**Error! Reference source not found.** summarizes the results from the State Point analysis. Figure 7-1**Error! Reference source not found.** below illustrates the clarifier state point analysis for the 16.3 mgd analysis of Plant 3, as an example.

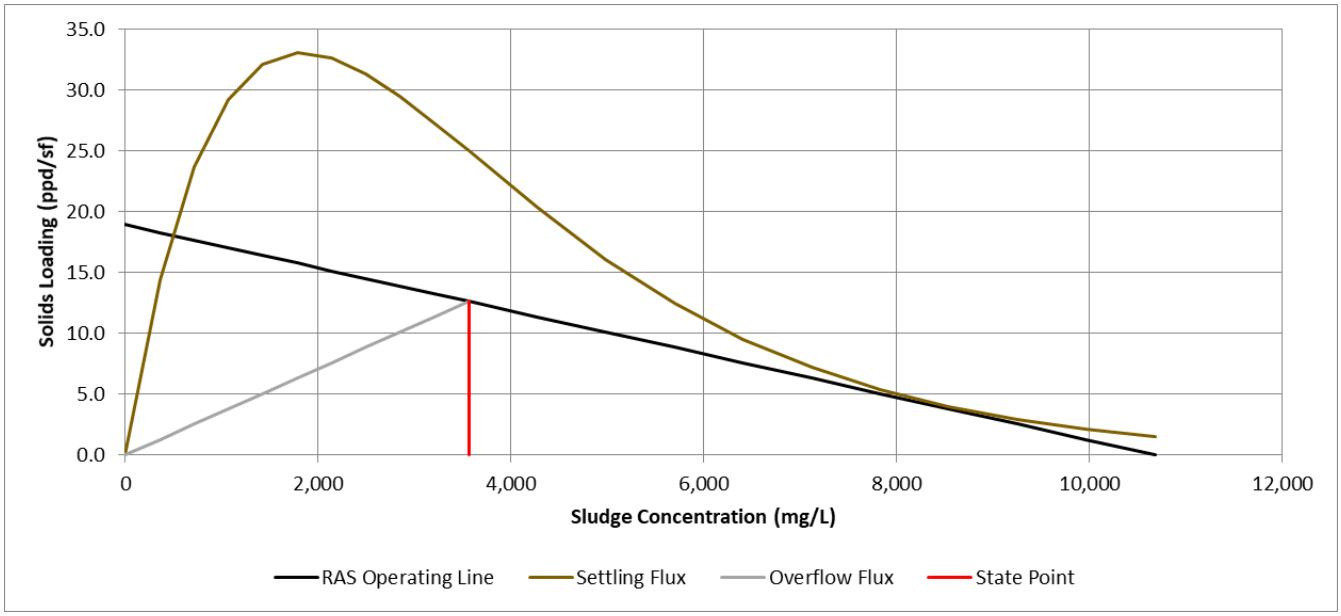

Figure 7-1 - Typical Solids Flux Curve for State Point Analysis

Table 7-2– Surprise SPA 1 WRF Secondary Clarifier Solids Loading Performance

BioWin Model	Plant III		Plant IV, V	
	ADMM		ADMM	
	Flow, mgd	Solids Loading, ppd/sf	Flow, mgd	Solids Loading, ppd/sf
Base Model	4.3	7.6	5.6	4.8
16.3 mgd	4.8	12.6	12.1	14.7
16.3 mgd (NH_3 Removal)	3.4	8.9	13.4	16.1

According to the WEF Design of Municipal Wastewater Treatment Plants (MOP8), typical solids loading rates for secondary clarifiers are 20-30 ppd/sf. The state point analysis results suggest that the existing clarifiers are sufficient for the 16.3 mgd flow condition.

□□Aeration System

The aeration system includes two main systems including the aeration blowers and jet aeration systems.

8.1. Aeration Blowers

Based on the process modeling and evaluation of blower technology including multi stage blowers, single stage centrifugal blowers and high speed “Turbo” blowers, the project team selected the single stage centrifugal blowers as the technology of choice. This technology is supplied by at least four

established manufacturers – Atlas Copco, Lone Star, Roots, and Turblex. The design parameters developed for these blowers are included in Table 8-1 below. Option A includes three operational blowers with one standby units, for a total of four and Option B evaluates five smaller blowers, with four operational and one standby.

Table 8-1 Blowers Design Parameters

Design Point	Capacity %	Total Discharge Air Flow cfm	Discharge Pressure psig	Inlet Temp oF	RH %	Estimated Power	
						Alternative A HP	Alternative B HP
1	100	31,600	5.5	100	15	340	260
2	80	25,280	5.3	75	40	200	200
3	60	18,960	5.2	45	60	160	150
4	45	14,220	5.1	40	60	120	110
5	100	31,600	5.5	40	40	300	240
6	45	14,220	5.1	100	40	120	120

The aeration blowers will be located in a new building that will house the blowers and associated piping system, mechanical cooling, electrical systems and controls. The building is detailed in the attached drawings.

8.2. Jet Aeration Systems

The design recommends using the two existing selector basins and dividing each oxidation ditch into the following aerated and oxic zones, as shown in Table 8-2.

Table 8-2 Oxidation Ditches Configuration

Zone	Volume, MG	Dissolved Oxygen Setpoint, mg/L	Airflow Rate, scfm	Oxygen Transfer Rate, lb/hr	Oxygen Uptake Rate, mg/L/hr
Selector Stage 1	0.08	Unaerated	N/A	N/A	2.5
Selector Stage 2	0.08	Unaerated	N/A	N/A	0.0
1	0.16	Unaerated	N/A	N/A	3.8
2	0.33	2.0	1,129	142	48.4
3	0.33	2.0	959	123	44.6
4	0.16	2.0	424	55	40.5
5	0.16	2.0	332	44	32.6
6	0.33	2.0	532	73	26.4

Zone	Volume, MG	Dissolved Oxygen Setpoint, mg/L	Airflow Rate, scfm	Oxygen Transfer Rate, lb/hr	Oxygen Uptake Rate, mg/L/hr
7	0.33	2.0	475	66	23.9
8	0.16	2.0	222	31	22.8
Total	**2.1**	**-**	**4,072**	**533**	**-**

Two aeration technologies were considered including fine bubble diffusers and jet aeration. The fine bubble diffusers are proposed to be installed in the aeration zones while the anoxic zones mixed with submerged mixers. This will require approximately 1000 diffuser head in each oxidation ditch. Based on this potentially challenging maintenance issue, the plant operation opted to use jet aeration. This will allow the use of pumps and jet headers to mix the anoxic zones and aerate the aerated zones. This will also allow for a higher level of flexibility in varying the location of the aerated/anoxic zones depending on process performance and varying influent strength. The design parameters associated with the jet aeration system are tabulated below:

Table 8-3 - Design Criteria

Oxidation Ditch Materials of Construction	Reinforced Concrete
Overall Oxidation Ditch Dimensions	315 ft long by 72 ft wide
Number of Oxidation Ditches	Plant IV – 2 ea Plant V – 2 ea
Maximum Liquid Level in Oxidation Ditch	11.5 feet
Oxidation Ditch Design Water Temperature	25 degrees Celsius
Oxidation Ditch Volume Capacity	1.95 million gallons (MG)
Alpha factor	0.75
Beta factor	0.98
Fouling Factor, F	0.95
[illegible]	5[illegible]
[illegible]	[illegible]
[illegible]	[illegible] [illegible]
[illegible]	5[illegible]
[illegible]	5[illegible]
[illegible]	[illegible]
[illegible]	5[illegible]
[illegible]	[illegible]

[illegible]	7[illegible]
M[illegible] R M	[illegible] r [illegible] M [illegible] r r [illegible] r
M[illegible] r [illegible] r d	5[illegible]
[illegible] d d [illegible] r [illegible] d r [illegible] r [illegible] r [illegible]	[illegible] r [illegible] M [illegible] r r [illegible] r
[illegible] r d [illegible] r [illegible] d r [illegible] r [illegible] r [illegible]	[illegible] r [illegible] M [illegible] r r [illegible] r
M[illegible] M [illegible] r [illegible] r [illegible]	75[illegible]

The actual oxygen requirements (AOR) design criteria are shown below:

Table 8-4 Oxygen Demand by Zone

	[illegible] MG	[illegible] d [illegible] U [illegible] R [illegible] r	D [illegible] d [illegible] r [illegible]
[illegible]	[illegible]	[illegible]	[illegible]
[illegible]	[illegible] 5	57 8	[illegible]
[illegible]	[illegible]	7	[illegible]
[illegible]	[illegible] 5	[illegible]	[illegible]
[illegible]	[illegible]	8	[illegible]

The layout proposed for the jet aeration system is included in the attached drawings.

The manufacturers considered for the jet aeration system includes Evoqua, Veolia or Equal.

Hydraulic Analysis

A hydraulic analysis for Plants III, IV and V was conducted to confirm that the three plants can handle the rerated capacity at the revised flowrates as shown in Table 9-1.

Table 9-1 – Flow Split

	Flow, mgd	
	Plant III	Plants IV / V
Current AAD	2.7	7.3
ADMM - 16.3 mgd	4.29	12.01
Peak Hr – 29.1 mgd	8.57	20.53

The hydraulic modeling was performed based on the existing piping and basin configuration. The results showed that the pipeline connecting the secondary clarifiers to the tertiary filters will cause the secondary effluent weirs to flood and will overflow the secondary clarifiers. Two scenarios are proposed to mitigate this condition including adding a parallel 18” line or a parallel 30”/36” line. The results are presented in Table 11-1.

□□□ Recharge Basin

The plant effluent is pumped for irrigation or recharged at the on site vadose zone wells (VZW) and recharge basins. The existing storage and recharge basins are summarized in Table 10-1 below:

Table 10-1 Existing Recharge and Storage Basins

Facility	Area (ft)	Recharge Capacity (gpm)	Notes
Storage Basin 1			Covered and baffled
Storage Basin 2			Covered and baffled
Recharge Basin 3			
Recharge Basin 4			

The existing VZWs are summarized in Table 10-2 below:

Table 10-2 Existing Vadose Zone Wells (VZWs)

Facility	Recharge Capacity (gpm)	Notes
VZW 1		
VZW 2		

The VZWs have been in operation for over 15 years and their performance is declining. The City intent is to re-establish the area at the north east of the site as a recharge basin. The proposed basin, Recharge Basin 5 is configured as follows:

- □ Area (sft)
- □ Average Depth (ft)
- □ Estimated recharge capacity (gpm)

10.1. Cost Estimate

The probable construction cost estimate is calculated between $32 and $35 Mil including the addition of the blower building, converting Plant IV and V, adding the recharge basin, adding a disinfection building, addressing the ground improvements at the effluent pump station and rehabbing junction structure xx.

□□□ Conclusions

11.1. Short Term Improvements

With modifications made to the aeration system of Plants IV and V, including replacement of the brush aerators with jet aeration and blowers (capable of achieving a DO setpoint of 2.0 mg/L) the WRF would be capable of reliably treating up to 16.3 MGD.

The hydraulic analysis recommendations include the addition of parallel piping between the secondary clarifiers and the tertiary filters to prevent flooding of the secondary clarifiers.

Other operational modifications include the following:

- □ Refurbish the recharge basin in the NE area of the plant to supplement recharge capacity.
- □ Mitigate the ground settlement observed at the effluent pump station

11.2. Long Term Improvements

If additional capacity is needed in the future, the addition of a secondary clarifier, primary clarifiers and modifications to Train III (including replacement of the existing aeration systems and addition of an IMLR return stream), the WRF would be capable of treating up to a maximum flow rate of 22 MGD. As noted previously, the modifications recommended to achieve both 16.3 MGD with ammonia reduction and 22.0 MGD would require programming modifications and more elaborate DO and nitrogen control instrumentation and monitoring.

Table 11-1 – Hydraulic Analysis Results – Various Scenarios

Major Structure	Top of Wall Elevation, ft	EXISTING 40.75-MGD		EXISTING 32.75-MGD		18" PARALLEL PIPING 40.75-MGD		18" PARALLEL PIPING 32.75-MGD		36" & 30" PARALLEL PIPING 40.75-MGD		36" & 30" PARALLEL PIPING 32.75-MGD		OPERABLE EXISTING 23-MGD	
		Water Surface Elevation or HGL, ft	TOW and Water Surface Difference, ft	Water Surface Elevation or HGL, ft	TOW and Water Surface Difference, ft	Water Surface Elevation or HGL, ft	TOW and Water Surface Difference, ft	Water Surface Elevation or HGL, ft	TOW and Water Surface Difference, ft	Water Surface Elevation or HGL, ft	TOW and Water Surface Difference, ft	Water Surface Elevation or HGL, ft	TOW and Water Surface Difference, ft	Water Surface Elevation or HGL, ft	TOW and Water Surface Difference, ft
Filter Influent Channel	1131.03	1128.52	2.51	1128.33	2.70	1128.52	2.51	1128.33	2.70	1128.52	2.51	1128.33	2.70	1128.13	2.90
Man Hole	1129.29	1132.60	-3.31	1130.97	-1.68	1130.88	-1.59	1129.85	-0.56	1129.28	0.01	1128.82	0.47	1129.43	-0.14
Secondary Clarifier	1138.10	1152.55	-14.45	1143.85	-5.75	1149.78	-11.68	1142.06	-3.96	1135.39	2.71	1135.06	3.04	1135.77	2.33
ML Splitter Box	1140.48	1137.74	2.74	1137.16	3.32	1137.74	2.74	1137.16	3.32	1137.74	2.74	1137.16	3.32	1136.63	3.85
Oxidation Ditch	1140.62	1139.16	1.46	1139.12	1.50	1139.16	1.46	1139.12	1.50	1139.16	1.46	1139.12	1.50	1139.07	1.55
Selector Basin No. 2	1143.00	1141.24	1.76	1141.18	1.82	1141.24	1.76	1141.18	1.82	1141.24	1.76	1141.18	1.82	1141.11	1.89
Selector Basin No. 1	1143.00	1141.24	1.76	1141.18	1.82	1141.24	1.76	1141.18	1.82	1141.24	1.76	1141.18	1.82	1141.11	1.89
Parshall Flume	1146.60	1142.79	3.81	1142.47	4.13	1142.79	3.81	1142.47	4.13	1142.79	3.81	1142.47	4.13	1142.03	4.57
Inlet Channel	1146.60	1143.43	3.17	1143.05	3.55	1143.43	3.17	1143.05	3.55	1143.43	3.17	1143.05	3.55	1142.53	4.07
Grit Effluent Channel	1147.75	1143.44	4.31	1143.05	4.70	1143.44	4.31	1143.05	4.70	1143.44	4.31	1143.05	4.70	1142.53	5.22
Vortex Grit removal	1147.75	1143.77	3.98	1143.35	4.40	1143.77	3.98	1143.35	4.40	1143.77	3.98	1143.35	4.40	1142.80	4.95
Screen Effluent Channel	1147.75	1144.17	3.58	1143.71	4.04	1144.17	3.58	1143.71	4.04	1144.17	3.58	1143.71	4.04	1143.09	4.66
Plant V SOR, gal/ft^2 d		1245.23		1000.77		1245.23		1000.77		1245.23		1000.77		1245.23	
Plant IV SOR, gal/ft^2 d		1245.23		1000.77		1245.23		1000.77		1245.23		1000.77		1245.23	
Plant III SOR, gal/ft^2 d		900.77		723.93		900.77		723.93		900.77		723.93		900.77	

CITY OF SURPRISE

PUBLIC WORKS DEPARTMENT

SPA 1 WRF CAPACITY EXP FACILITY RERATING

11401 N 136TH AVENUE, SURPRISE AZ

TOWNSHIP 3N, RANGE 1W, SECTION 22

AUGUST 2022

VOLUME 1 OF 1

30% SUBMITTAL

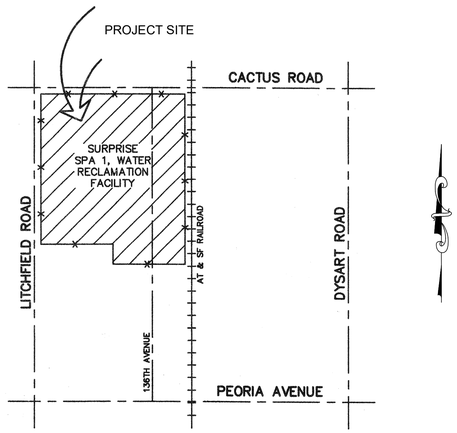

VICINITY MAP

NTS

THESE PLANS ARE FOR OFFICIAL USE ONLY AND MAY NOT BE SHARED WITH OTHERS EXCEPT AS REQUIRED TO FULLFILL THE OBLIGATIONS OF YOUR CONTRACT WITH THE CITY OF SURPRISE.

ALL MATERIAL COMING IN CONTACT WITH POTABLE WATER MUST MEET NSF STANDARDS 6 & 61 IN ACCORDANCE WITH R18-4-213

CITY PROJECT MANAGER

CITY OF SURPRISE
16000 N. CIVIL PLAZA
SURPRIZE AZ, 85374

PHONE: (623) 222-6130

CONTACT: REYNALDO ALDAVA

ENGINEER

WATERWORKS ENGINEERS
7500 N. DOBSON ROAD, SUITE 200
SCOTTSDALE, AZ 85256

PHONE: (480) 661-1742
FAX: (480) 661-1743

CONTACT: JOHN MATTA P.E.

APPROVALS

CITY OF SURPRISE SIGNATURE BLOCK

THIS SET OF PLANS HAS BEEN REVIEWED FOR COMPLIANCE WITH CITY REQUIREMENTS PRIOR TO ISSUANCE OF PERMITS. THE CITY NEITHER ACCEPTS NOR ASSUMES ANY LIABILITY FOR ERRORS OR OMISSIONS. THIS COMPLIANCE APPROVAL SHALL NOT PREVENT THE CITY ENGINEER FROM REQUIRING CORRECTIONS OF ERRORS OR OMISSIONS IN PLANS FOUND TO BE IN VIOLATION OF LAW OR ORDINANCES.

APPROVED: _____
CITY OF SURPRISE ENGINEER DATE

APPROVED: _____
MARICOPA COUNTY ENVIRONMENTAL SERVICES DEPARTMENT DATE

30% SUBMITTAL

NOT FOR CONSTRUCTION

NO.	REVISION	REV BY	CKD BY	DATE
-	-	-	-	-

SURPRISE ARIZONA

CITY OF SURPRISE
SPA 1 WRF CAPACITY
EXP FACILITY
RERATING

WATERWORKS ENGINEERS

GENERAL

COVER SHEET

DESIGN DB

DRAWN MC

CHECKED JHM

DATE
AUGUST 2022

PROJECT NUMBER
20-018

DRAWING NUMBER
G-00-001

SHEET NO. 1 OF

REUSE OF DOCUMENTS: THIS DOCUMENT, AND THE IDEAS AND DESIGN INCORPORATED HEREIN, AS AN INSTRUMENT OF PROFESSIONAL SEVICE, IS THE PROPERTY OF WATER WORKS ENGINEERS, LLC. AND IS NOT TO BE USED, IN WHOLE OR PART, FOR ANY OTHER PROJECT WITHOUT THE WRITTEN AUTHORIZATION OE WATER WORKS ENGINEERS,LLC.

FILE PATH: BIM 360://20-018 SPA 1 WRF Capacity Exp Facility Rerating/2018D-M-Blower Building.rvt

DATE AND TIME: 7/22/2022 11:07:47 AM

SHEET INDEX		
SHEET NO.	**DRAWING NO.**	**TITLE**
1	G-00-001	COVER SHEET
2	G-00-002	DRAWING INDEX
3	G-00-003	GENERAL NOTES
4	G-00-004	ABBREVIATIONS
5	G-00-005	STANDARD DESIGNATIONS
6	G-00-006	HYDRAULIC PROFILE
7	G-00-007	HYDRAULIC PROFILE 2
8	G-00-008	SPA1 WRF MASTER SITE PLAN
9	D-00-100	PLANTS IV & V OXIDATION DITCHES DEMOLITION PLAN
10	C-00-101	OVERALL SITE PLAN
11	C-10-101	YARD PIPING
12	A-40-101	BLOWER BUILDING
13	A-40-201	BLOWER BUILDING NORTH & SOUTH
14	A-40-202	BLOWER BUILDING EAST & WEST
15	S-00-001	GENERAL NOTES 1
16	S-00-002	GENERAL NOTES 2
17	S-00-003	GENERAL NOTES 3
18	M-10-101	PLANT III OXIDATION DITCH AERATION SYSTEM PLAN
19	M-10-102	PLANT IV OXIDATION DITCH AERATION SYSTEM PLAN
20	M-10-103	PLANT V OXIDATION DITCH AERATION SYSTEM PLAN
21	M-10-202	PLANT IV OXIDATION DITCH AERATION SYSTEM SECTIONS
22	M-10-203	PLANT V OXIDATION DITCH AERATION SYSTEM SECTIONS
23	M-10-401	OXIDATION DITCHES ISOMETRIC VIEWS
24	M-40-101	BLOWER BUILDING PLAN
25	M-40-201	BLOWER BUILDING SECTIONS
26	M-40-401	BLOWER BUILDING ISOMETRIC VIEW
27	ED-00-100	CLARIFIER AND OXIDATION DITCH PLANT IV AND V POWER PLAN
28	ED-00-101	PLANTS IV & V ELECTRICAL ROOM DEMOLITION PLAN
29	ED-00-102	EXISTING MCC-OX-SB2 ONE-LINE DIAGRAM - DEMOLITION
30	ED-00-103	EXISTING MCC-OX4-EE ONE-LINE DIAGRAM - DEMOLITION
31	ED-00-104	EXISTING MCC-OX5-EE ONE-LINE DIAGRAM - DEMOLITION
32	ED-00-105	CONDUIT SCHEDULES PLANT IV
33	ED-00-106	CONDUIT SCHEDULES PLANT IV OXIDATION DITCH/IV & V EFFLUENT
34	ED-00-107	CONDUIT SCHEDULES PLANT V
35	E-00-001	SYMBOLS AND LEGENDS 1
36	E-00-002	SYMBOLS AND LEGENDS 2
37	E-00-003	SYMBOLS AND LEGENDS 3
38	E-00-101	ELECTRICAL SITE PLAN
39	E-00-101A	PLANTS IV & V ELECTRICAL ROOM NEW WORK
40	E-00-102	EXISTING MCC-OX-SB2 ONE-LINE DIAGRAM - NEW WORK
41	E-00-103	EXISTING MCC-OX4-EE ONE-LINE DIAGRAM - NEW WORK
42	E-00-104	EXISTING MCC-OX5-EE ONE-LINE DIAGRAM - NEW WORK
43	E-00-105	SWBD-OX-BL1 ONE-LINE DIAGRAM
44	E-00-106	BLOWER BUILDING BLOCK DIAGRAM
45	E-00-107	BLOWER BUILDING BLOCK DIAGRAM
46	E-10-102	PLANT IV OXIDATION DITCH AERATION SYSTEM PLAN
47	E-10-103	PLANT V OXIDATION DITCH AERATION SYSTEM PLAN
48	E-40-101	BLOWER BUILDING POWER PLAN
49	N-00-001	SYMBOLS AND LEGEND 1
50	N-00-002	SYMBOLS AND LEGEND 2
51	N-10-101	PLANT IV NORTH OXIDATION DITCH SYSTEM P&ID
52	N-10-102	PLANT IV SOUTH OXIDATION DITCH SYSTEM P&ID
53	N-10-103	PLANT V NORTH OXIDATION DITCH SYSTEM P&ID
54	N-10-104	PLANT V SOUTH OXIDATION DITCH SYSTEM P&ID
55	N-40-101	PLANT IV & V BLOWERS SYSTEM P&ID
56	N-40-102	PLANT IV & V BLOWER SYSTEM P&ID

NO.	REVISION	REV BY	CKD BY	DATE
-	-	-	-	-

SURPRISE
ARIZONA

CITY OF SURPRISE
SPA 1 WRF CAPACITY
EXP FACILITY
RERATING

WATERWORKS ENGINEERS

30% SUBMITTAL

NOT FOR CONSTRUCTION

GENERAL

DRAWING INDEX

CHECKED JHM

DRAWN MC

DESIGN DB

DATE
AUGUST 2022

PROJECT NUMBER
20-018

DRAWING NUMBER
G-00-002

SHEET NO. 2 OF

REUSE OF DOCUMENTS: THIS DOCUMENT, AND THE IDEAS AND DESIGN INCORPORATED HEREIN, AS AN INSTRUMENT OF PROFESSIONAL SEVICE, IS THE PROPERTY OF WATER WORKS ENGINEERS, LLC. AND IS NOT TO BE USED, IN WHOLE OR PART, FOR ANY OTHER PROJECT WITHOUT THE WRITTEN AUTHORIZATION OE WATER WORKS ENGINEERS,LLC.

FILE PATH: BIM 360://20-018 SPA 1 WRF Capacity Exp Facility Rerating/2018D-M-Blower Building.rvt

DATE AND TIME: 7/22/2022 12:07:24 PM

GENERAL NOTES:

1. ALL CONSTRUCTION MUST CONFORM TO MARICOPA ASSOCIATION OF GOVERNMENT (MAG) SPECIFICATIONS AND DETAILS AND LATEST REVISIONS UNLESS OTHERWISE STATED ON PLANS.

2. THE ENGINEER WILL NOT BE RESPONSIBLE FOR CONSTRUCTION MEANS, METHODS, TECHNIQUES, SEQUENCES, OR PROCEDURES OR FOR SAFETY PRECAUTIONS OR PROGRAMS UTILIZED IN CONNECTION WITH THE WORK, AND THEY WILL NOT BE RESPONSIBLE FOR THE CONTRACTOR'S FAILURE TO CARRY OUT THE WORK IN ACCORDANCE WITH THE CONTRACT DOCUMENTS.

3. THE CONTRACTOR SHALL BE RESPONSIBLE FOR IDENTIFYING ALL OVERHEAD AND UNDERGROUND UTILITY LOCATIONS WHERE CONSTRUCTION OCCURS. SPECIAL CARE SHALL BE TAKEN TO ENSURE THAT ALL UTILITIES ARE AVOIDED. UTILITY LOCATIONS SHOWN ON THE PLANS ARE APPROXIMATE AND NOT FOR CONSTRUCTION PURPOSES. ANY DAMAGE TO EXISTING UTILITIES SHALL BE REPAIRED AND OR REPLACED AT THE CONTRACTOR'S EXPENSE. THE CONTRACTOR SHALL COMPLY WITH ALL CURRENT ARIZONA UNDERGROUND FACILITIES LAWS (ARIZONA REVISED STATUTES TITLE 40, CHAPTOR 2, ARTICLE 6.3, SECTION 40-360.21-32). CALL ARIZONA 811 FOR FIELD LOCATION BY DIAL 811.

4. THE CITY OF SURPRISE ENGINEERING SERVICES OF PUBLIC WORKS SHALL BE NOTIFIED FORTY-EIGHT (48) HOURS PRIOR TO COMMENCEMENT OF ANY CONSTRUCTION WORK AT 623-222-6150.

5. THE ENGINEER AND APPLICABLE AGENCY MUST APPROVE, PRIOR TO CONSTRUCTION, ANY ALTERATION OR VARIATION FROM THESE PLANS. ANY VARIATION FROM THESE PLANS SHALL BE PROPOSED AND RESUBMITTED FOR REVIEW AND APPROVAL.

6. THE CONTRACTOR SHALL PROTECT AND MAINTAIN ALL EXISTING UTILITIES ON THE SITE. ANY DAMAGE TO EXISTING UTILITIES, WHETHER SHOWN OR NOT ON THE DRAWING, SHALL BE REPAIRED/REPLACED AT THE CONTRACTOR'S EXPENSE. EXISTING SURFACE FEATURES AND FENCING SHALL BE REPLACED IN KIND.

7. ANY INSPECTION BY THE CITY, COUNTY, OR THE ENGINEER, SHALL NOT IN ANY WAY RELIEVE THE CONTRACTOR FROM ANY OBLIGATION TO PERFORM THE WORK IN STRICT COMPLIANCE WITH THE APPLICABLE CODES AND AGENCY REQUIREMENTS.

8. THE CONTRACTOR IS TO LOCATE ALL EXISTING LANDSCAPING, LANDSCAPING IRRIGATION LINES, PROPERTY MONUMENTS, FENCING OR SURFACE FEATURES PRIOR TO CONSTRUCTION. ANYTHING DISTURBED DURING CONSTRUCTION SHALL BE REPLACED IN KIND AT THE CONTRACTOR'S EXPENSE.

9. NOTHING CONTAINED IN THE CONTRACT DOCUMENTS SHALL CREATE, NOR SHALL BE CONSTRUED TO CREATE, ANY CONTRACTUAL RELATIONSHIP BETWEEN THE ENGINEER AND THE CONTRACTOR OR ANY SUBCONTRACTOR.

10. ALL CONSTRUCTION WATER USED WITHIN THE CITY OF SURPRISE WATER SERVICE AREA REQUIRES APPROVAL BY THE CITY OF SURPRISE PUBLIC WORKS DEPARTMENT AND MAY BE SUBJECT TO VOLUME AND TIME RESTRICTIONS. PLEASE SEE THE CITY OF SURPRISE CONSTRUCTION WATER GUIDELINES FOR ADDITIONAL INFORMATION. THE GUIDELINES CAN BE OBTAINED FROM THE PUBLIC WORKS DEPARTMENT AT 623-222-6000.

11. TRAFFIC CONTROL SHALL BE MAINTAINED IN ACCORDANCE WITH MAG SPECIFICATION 401, THE MANUAL ON UNIFORM TRAFFIC CONTROL DEVICES, AND THE "TEMPORARY WORK ZONE TRAFFIC MANAGEMENT POLICY" (LATEST EDITION).

12. PRIOR TO FINAL APPROVAL AND ACCEPTANCE OF THE WORK, THE DEVELOPER/CONTRACTOR WILL BE REQUIRED TO CLEAN AND REPAIR ADJACENT (OFF-PROJECT) ROADWAYS USED OR DAMAGED DURING THE COURSE OF CONSTRUCTION.

13. EMERGENCY VEHICLE ACCESS (E.V.A.) MUST BE PROVIDED BY THE DEVELOPER/CONTRACTOR THROUGHOUT THE PROJECT SITE. E.V.A. ROADS AND SIGNAGE SHALL BE MAINTAINED BY THE DEVELOPER/CONTRACTOR AT ALL TIMES. SIGNAGE SHALL BE POSTED AT THE POINT OF ENTRY TO THE SITE AND AT ALL LOCATIONS WHERE A CHANGE IN DIRECTION OCCURS.

14. THE PLANS SHALL COMPLY WITH THE AMERICANS WITH DISABILITIES ACT'S ACCESSIBILITY GUIDELINES, AS PUBLISHED IN THE FEDERAL REGISTER ON SEPTEMBER 15, 2010.

GENERAL GRADING NOTES:

1. CONTRACTOR TO FOLLOW RECOMMENDATIONS LISTED IN THE PROJECT SPECIFIC GEOTECHNICAL REPORT. SHOULD ANY CONFLICTS ARISE BETWEEN THE SOILS INVESTIGATION REPORT AND THESE GRADING PLANS, THE CIVIL ENGINEER SHALL BE CONTACTED FOR CLARIFICATION.

2. THE ENGINEER MAKES NO REPRESENTATION OR GUARANTEE REGARDING EARTHWORK QUANTITIES OR THAT THE EARTHWORK FOR THIS PROJECT WILL BALANCE DUE TO UNFORESEEN FIELD CONDITIONS.

3. THE ENGINEER WILL PERFORM FIELD SURVEYS FOR PAD ELEVATION CERTIFICATIONS, UPON NOTIFICATION BY THE GRADING CONTRACTOR, THAT THE PADS ARE COMPLETE AND READY FOR CERTIFICATION. IT IS UNDERSTOOD THAT THE CERTIFICATION PROVIDES ONLY A REPRESENTATIVE ELEVATION OF THE AVERAGE GRADE OF EACH LOT, BUILDINGS, OR UNIT PAD, AND SHALL NOT BE CONSTRUED TO INCLUDE YARD AND STREET SUBGRADE CERTIFICATION OR CERTIFICATION THAT THE ENTIRE PAD IS LEVEL, THAT IT WAS CONSTRUCTED IN THE DESIGNED LOCATION OR WAS GRADED DESIGNATED IN THE SOILS REPORT.

4. AN APPROVED GRADING AND DRAINAGE PLAN MUST BE ON THE JOB SITE AT ALL TIMES. DEVIATIONS FROM THIS PLAN MUST BE PRECEDED BY AN APPROVED PLAN REVISION.

5. ALL DRAINAGE FACILITIES SUCH AS SWALES, INTERCEPTOR DITCHES, PIPES, PROTECTIVE BERMS, BARRIER WALLS, CONCRETE CHANNELS, OR OTHER MEASURES DESIGNED TO PROTECT BUILDINGS FROM STORM RUNOFF MUST BE CONSTRUCTED PRIOR TO CONSTRUCTION OF ANY BUILDINGS.

6. A GRADING PERMIT IS REQUIRED. BEFORE A GRADING PERMIT IS ISSUED BY THE CITY OF SURPRISE ENGINEERING SERVICES, THE CONTRACTOR MUST FIRST OBTAIN A DUST CONTROL PERMIT FROM MARICOPA COUNTY ENVIRONMENTAL SERVICES-AIR QUALITY DIVISION.

7. HAUL PERMITS, WHEN REQUIRED, MUST BE OBTAINED PRIOR TO OR CONCURRENTLY WITH THE GRADING AND DRAINAGE PERMIT.

8. A SEPARATE PERMIT IS NECESSARY FOR ANY OFFSITE CONSTRUCTION.

9. CONTRACTOR SHALL PROVIDE LEVEL BOTTOM IN ALL RETENTION BASINS AT ELEVATIONS AS SHOWN ON THE PLANS. SIDE SLOPES IN ALL RETENTION BASINS SHALL NOT EXCEED 4:1 UNLESS NOTED OTHERWISE ON THE PLANS.

10. DRYWELLS, WHEN REQUIRED, MUST BE DRILLED A MINIMUM OF TEN (10) FEET INTO PERMEABLE POROUS STRATA OR PERCOLATION TESTS WILL BE REQUIRED. THE CIVIL INSPECTOR MUST BE PRESENT BEFORE BACKFILL OR WELL PIPES ARE PLACED WITHIN ANY DRYWELLS.

    THE OWNER/DEVELOPER SHALL BE RESPONSIBLE FOR REGISTERING THE DRYWELLS SHOWN ON THE PLAN WITH THE ARIZONA DEPARTMENT OF ENVIRONMENTAL QUALITY (ADEQ).

11. THE OWNER/DEVELOPER SHALL BE RESPONSIBLE FOR MAINTENANCE OF DRYWELLS SHOWN ON THE PLAN.

12. ACCESS BARRIERS/TRASH RACKS ARE REQUIRED ON THE EXPOSED ENDS OF ALL STORM DRAINS EIGHTEEN (18) INCHES IN DIAMETER AND GREATER. SEE DETAILS 5-06A, 5-06B, AND 5-06C. REFER TO MAG DETAILS 502-1 AND 502-2 FOR PIPES LESS THAN THIRTY (30) INCHES IN DIAMETER.

13. SOIL COMPACTION TEST RESULTS MUST BE SUBMITTED TO THE CITY OF SURPRISE ENGINEERING SERVICES FOR BUILDING PADS THAT HAVE ONE (1) FOOT OR MORE OF FILL MATERIAL INDICATED.

14 A PAD CERTIFICATION LETTER FOR EACH PHASE OR PARCEL MUST BE SUBMITTED TO THE CITY OF SURPRISE ENGINEERING SERVICES BY THE DEVELOPER STATING THAT EACH PAD HAS BEEN BUILT IN ACCORDANCE WITH THE SOILS INVESTIGATIVE REPORT AND CITY OF SURPRISE REQUIREMENTS .

15. APPROVAL OF THESE PLANS SHALL NOT PREVENT THE CITY FROM REQUIRING THE CORRECTION OF ERRORS IN THE PLANS WHERE SUCH ERRORS ARE SUBSEQUENTLY FOUND TO BE IN VIOLATION OF ANY LAW OR ORDINANCE.

16. ALL CONSTRUCTION SITES WITH DISTURBED AREAS OF ONE (1) ACRE OR GREATER SHALL HAVE A STORM WATER POLLUTION PREVENTION PLAN (SWPPP) AND ALL ASSOCIATED DOCUMENTS (SEE ENGINEERING AND PERMITTING APPLICATION PACKET).

17. CAUTION REGARDING STORM DRAIN PIPES: CONTRACTOR IS RESPONSIBLE FOR PROTECTING THE PIPE FROM DAMAGE DURING THE CONSTRUCTION STAGE. THE COVER ON THE DRAINAGE PIPE IS DESIGNED FOR FINAL GRADE; THEREFORE, EXTRA CARE MUST BE EXERCISED DURING THE CONSTRUCTION PHASE TO MAINTAIN COVER OVER PIPES.

18. NOTE REGARDING CMU AND RETAINING WALLS: THE CITY OF SURPRISE REQUIRES ALL WALLS BE APPROVED BY THE COMMUNITY DEVELOPMENT DEPARTMENT (623-222-3000). BUILDING PERMITS AND INSPECTIONS ARE REQUIRED PER THE INTERNATIONAL BUILDING CODE.

NO.	REVISION	REV BY	CKD BY	DATE
-	-	-	-	-

SURPRISE ARIZONA

CITY OF SURPRISE
SPA 1 WRF CAPACITY
EXP FACILITY
RERATING

WATERWORKS ENGINEERS

30% SUBMITTAL

NOT FOR CONSTRUCTION

GENERAL

GENERAL NOTES

CHECKED JHM

DRAWN MC

DESIGN DB

DATE: AUGUST 2022

PROJECT NUMBER 20-018

DRAWING NUMBER G-00-003

SHEET NO. 3 OF

REUSE OF DOCUMENTS: THIS DOCUMENT, AND THE IDEAS AND DESIGN INCORPORATED HEREIN, AS AN INSTRUMENT OF PROFESSIONAL SEVICE, IS THE PROPERTY OF WATER WORKS ENGINEERS, LLC. AND IS NOT TO BE USED, IN WHOLE OR PART, FOR ANY OTHER PROJECT WITHOUT THE WRITTEN AUTHORIZATION OE WATER WORKS ENGINEERS,LLC.

FILE PATH: BIM 360://20-018 SPA 1 WRF Capacity Exp Facility Rerating/2018D-M-Blower Building.rvt

DATE AND TIME: 7/22/2022 11:07:49 AM

ABBREVIATIONS

@	AT
AB	ANCHOR BOLT, AGGREGATE BASE
AC	ASPHALTIC CONCRETE
ACI	AMERICAN CONCRETE INSTITUTE
ADD	ADDITIONAL
ADH AB	ADHESIVE ANCHOR BOLT
ADJ	ADJACENT, ADJUSTABLE
AFF	ABOVE FINISH FLOOR
AFG	ABOVE FINISH GRADE
AHP	AIR HIGH PRESSURE
AISC	AMERICAN INSTITUTE OF STEEL CONSTRUCTION
AL, ALUM	ALUMINUM
ALP	AIR LOW PRESSURE
ALTN	ALTERNATE
ANSI	AMERICAN NATIONAL STANDARDS INSTITUTE
APPROX	APPROXIMATE
APVD	APPROVED
ARCH, A	ARCHITECTURAL
ARV	AIR RELEASE VALVE
ASTM	AMERICAN SOCIETY FOR TESTING AND MATERIALS
AUTO	AUTOMATIC
AUX	AUXILIARY
AV	AIR/VACUUM ASSEMBLY
AVE	AVENUE
AWG	AMERICAN WIRE GAGE
AWWA	AMERICAN WATER WORKS ASSOCIATION
B	BORING
BC	BEGIN CURVE, BACK OF CURB
BF	BLIND FLANGE; BOTTOM FACE
BFD	BUTTERFLY VALVE DAMPER
BFP	BACKFLOW PREVENTER
BFV	BUTTERFLY VALVE
BLDG	BUILDING
BLM	BUREAU OF LAND MANAGEMENT
BM	BENCH MARK, BEAM
BO	BLOW OFF
BOO	BOTTOM OF OPENING
BOT	BOTTOM
BPS	BOOSTER PUMP STATION
BRG	BEARING
BV	BALL VALVE
BVC	BEGINNING OF VERTICAL CURVE
BYP	BYPASS
C to C, CC	CENTER TO CENTER
C	CHANNEL (BEAM)
CAA/ARV	COMBINATION AIR ADMISSION/AIR RELEASE VALVE
CARV	COMBINATION AIR RELEASE VALVE
CATH	CATHODIC PROTECTION
CATV	CABLE TELEVISION
CB	CATCH BASIN
CCP	CONCRETE CYLINDER PIPE
CCS	CENTRAL CONTROL SYSTEM
CFM	CUBIC FEET PER MINUTE
CFS	CUBIC FEET PER SECOND
CHEM	CHEMICAL
CI	CAST IRON
CIGC	CAST IRON GROOVED COUPLING
CIMJ	CAST IRON MECHANICAL JOINT
CIP	CAST IRON PIPE
CIRJ	CAST IRON RESTRAINED JOINT
CISP	CAST IRON SOIL PIPE
CJ	CONSTRUCTION JOINT, CONTRACTION JOINT
CLDIP	CEMENT-LINED DUCTILE IRON PIPE
CLG	CEILING
CLR	CLEAR, CLEARANCE
CLSM	CONTROLLED LOW STRENGTH MATERIAL
CL	CENTERLINE
CML, CSP	CONCRETE MORTAR LINED AND COATED STEEL PIPE
CMLSP	CEMENT MORTAR LINED STEEL PIPE
CMP	CORRUGATED METAL PIPE
CMU	CONCRETE MASONRY UNIT
CO	CLEANOUT
COL	COLUMN
COM	COMMUNICATION
COMB	COMBINED
CONC	CONCRETE
CONN	CONNECTION
CONT	CONTINUOUS, CONTINUATION
COORD	COORDINATE
COP.	COPPER
CPLG	COUPLING
CTD	CENTERED
CTR	CENTER
CU FT	CUBIC FOOT
CU IN	CUBIC INCH
CU YD	CUBIC YARD
CULV	CULVERT
CV	CHECK VALVE
°C	CELSIUS
DC	DOUBLE CONTAINMENT
d	PENNY
DBA	DEFORMED BAR ANCHOR
DR	DRAIN
DBL	DOUBLE
DEC	DECANT
DET	DETAIL
DF	DOUGLAS FIR/LARCH
DI	DROP INLET, DUCTILE IRON
DIA	DIAMETER
DIAG	DIAGONAL
DIL	DILUTE
DIM	DIMENSION
DIMJ	DUCTILE IRON MECHANICAL JOINT
DIP	DUCTILE IRON PIPE
DIPPL	DUCTILE IRON PIPE POLYETHYLENE LINED

DIR	DIRECTION
DIST	DISTANCE
DN	DOWN
do	DITTO
DWG	DRAWING
E	EAST, ELECTRIC, ELECTRICAL
EA	EACH
EC	END CURVE
ECC	ECCENTRIC
EDB	ELECTRICAL DUCT BANK
EF	EACH FACE, EXHAUST FAN
EFL	EFFLUENT
EJ	EXPANSION JOINT
EL	ELEVATION
ELB, ELL	ELBOW
ELC	ELECTRICAL LOAD CENTER
ELEC	ELECTRIC, ELECTRICAL
ENGR	ENGINEER
EO	EMERGENCY OVERFLOW
EOP	EDGE OF PAVEMENT
EPDS	ENTRY POINT TO DISTRIBUTION SYSTEM
EQL SP	EQUALLY SPACED
EQPT	EQUIPMENT
ERW	EFFLUENT REUSE WATER
ESA	ENVIRONMENTALLY SENSITIVE AREA
EVC	END OF VERTICAL CURVE
EW	EACH WAY
EWEF	EACH WAY, EACH FACE
EXC	EXCAVATE
EXP	EXPOSED, EXPANSION
EXP JT	EXPANSION JOINT
EXST	EXISTING
FB	FLAT BAR
FC	FLEXIBLE COUPLING
FCA	FLANGED COUPLING ADAPTER
FCO	FLOOR CLEAN OUT
FD	FLOOR DRAIN
FDA	FLOOR DRAIN WITH INTEGRAL TRAP
FDN	FOUNDATION
FES	FLARED END SECTION
FEXT	FIRE EXTINGUISHER
FF	FINISH FLOOR
FG	FINISH GRADE
FH	FIRE HYDRANT
FIG	FIGURE
FL	FLOOR, FLOW LINE
FLG	FLANGE
FLH	FLAT HEAD
FLL	FLOW LINE
FLTR	FILTER
FM	FLOW METER
FNSH	FINISH
FOC	FACE OF CONCRETE
FRP	FIBERGLASS REINFORCED PLASTIC
FT	FOOT OR FEET
FTG	FOOTING
FWD	FORWARD
°F	DEGREE FAHRENHEIT
G	GAS
GA	GAGE
GAL	GALLON
GALV	GALVANIZED
GB	GRADE BREAK
GC	GROOVED COUPLING
GCO	GRADE CLEAN OUT
GCF	GROOVED COUPLING FITTING
GE	GROOVED END
GL	GLASS
GPD	GALLONS PER DAY
GPH	GALLONS PER HOUR
GPM	GALLONS PER MINUTE
GRTG	GRATING
GSP	GALVANIZED STEEL PIPE
GV	GATE VALVE
GVL	GRAVEL
HD	HUB DRAIN
HDPE	HIGH DENSITY POLYETHLENE PIPE
HDR	HEADER
HDW	HARDWARE
HGT	HEIGHT
HM	HOLLOW METAL
HORIZ	HORIZONTAL
HP	HORSEPOWER
HR	HANDRAIL
HSS	HOLLOW STRUCTURE STEEL
HV	HOSE VALVE
HWE	HIGH WATER ELEVATION
I&C	INSTRUMENTATION & CONTROL
ID	INSIDE DIAMETER
IF	INSIDE FACE
IN	INCH
INFL	INFLUENT
INSTM	INSTRUMENTATION
INSUL	INSULATE, INSULATION
INV	INVERT
JT	JOINT
KIP	THOUSAND POUNDS
KW	KILOWATT

L	LEFT, ANGLE, LENGTH
LAB	LABORATORY
LAT'L	LATERAL
LB	POUNDS
LB/CU FT	POUNDS PER CUBIC FOOT
LF	LINEAR FEET
LG	LONG
LONG	LONGITUDINAL
LP	LOW POINT
LR	LONG RADIUS
MAX	MAXIMUM
MCC	MOTOR CONTROL CENTER
MCJ	MASONRY CONTROL JOINT
MECH	MECHANICAL
MFR	MANUFACTURER
MGD	MILLION GALLONS PER DAY
MH	MANHOLE
MIN	MINIMUM, MINUTE
MISC	MISCELLANEOUS
MJ	MECHANICAL JOINT
MPH	MILES PER HOUR
MSNRY	MASONRY
MSP	MILL STEEL PIPE, MANUAL OF STANDARD PRACTICE
MTL	MATERIAL
MWS	MAXIMUM WATER SURFACE
N	NORTH
NIC	NOT IN CONTRACT
NO	NUMBER, NUMBERING
NPT	NATIONAL PIPE THREAD
NTS	NOT TO SCALE
OC	ON CENTER
OD	OUTSIDE DIAMETER, OVERFLOW DRAIN
OF	OUTSIDE FACE, OVERFLOW
OFR	OVERFLOW RETURN
OG	ORIGINAL GROUND
OH	OVERHEAD
OMRF	ORDINARY MOMENT RESISTING FRAME
O TO O	OUT TO OUT
OPNG	OPENING
OZ	OUNCE
PC	POINT OF CURVE
PE	PLAIN END, POLYETHYLENE AND PERMANENT EASEMENT
PENT	PENETRATION
PI	POINT OF INTERSECTION
PJF	PREMOLDED JOINT FILLER
PL	PLATE, PROPERTY LINE
PLYWD	PLYWOOD
POB	POINT OF BEGINNING
POE	POINT OF ENTRY
PP, P&P	PLAN AND PROFILE
PPM	PARTS PER MILLION
PRC	POINT OF REVERSE CURVE
PRCST	PRECAST
PREFAB	PREFABRICATED
PRESS	PRESSURE
PRC	POINT OF REVERSE CURVE
PRI	PRIMARY
PROP	PROPERTY
PSF	POUNDS PER SQUARE FOOT
PS	PUMP STATION
PSI	POUNDS PER SQUARE INCH
PSIG	POUNDS PER SQUARE INCH, GAUGE
PT	POINT OF TANGENCY
PV	PLUG VALVE
PVC	POLYVINYL CHLORIDE PLASTIC
PVCGS	PVC GRAVITY SEWER TYPE
PVCW	PVC WATER DISTRIBUTION SERVICE TYPE
PVMT	PAVEMENT
PVT	PRIVATE
PW	POTABLE WATER
R, RAD	RADIUS
RC	REINFORCED CONCRETE
RCP	REINFORCED CONCRETE PIPE
RD	ROAD, ROOF DRAIN
RDCR	REDUCER
REF	REFER OR REFERENCE
REINF	REINFORCED, REINFORCING OR REINFORCE
REQD	REQUIRED
RJ	RESTRAINED JOINT
RLS	RUBBER LINED STEEL
RM	ROOM
RMJ	RESTRAINED MECHANICAL JOINT
RO	ROUGH OPENING
R/R	REMOVE AND REPLACE
RST	REINFORCING STEEL
RTN	RETURN
RV	ROOF VENT
RW	RAW WATER
R/W	RIGHT-OF-WAY
S	I-BEAM, SOUTH, SLOPE
SA	SAMPLE
SAT	SUSPENDED ACOUSTIC TILE
SC	SCUM
SCFH	STANDARD CUBIC FEET PER HOUR
SCFM	STANDARD CUBIC FEET PER MINUTE
SCH	SCHEDULE
SD	STORM DRAIN
SEC	SECONDARY
SECT	SECTION

SH	SHEET
SIM	SIMILAR
SLD	SLUDGE
SLP	SLOPE
SOLN	SOLUTION
SP	SPACE OR SPACES
SPD	SUMP PUMP DRAIN
SPEC	SPECIFICATIONS
SPLY	SUPPLY
SQ	SQUARE
SQ FT	SQUARE FOOT
SQ IN	SQUARE INCH
SS	SANITARY SEWER
SSH	SAFETY SHOWER
SST	STAINLESS STEEL
STA	STATION
STD	STANDARD
STIF	STIFFENER
STL	STEEL, STEEL PIPE
STLS	STEEL PIPE (SPECIAL)
STR	STRAIGHT
STRL	STRUCTURAL
STRUCT	STRUCTURE
SUBFL	SUBFLOOR
SUSP	SUSPEND
SYMM	SYMMETRICAL
T	TANGENT, TELEPHONE LINE
TBG	TUBING
T&B	TOP AND BOTTOM
TCE	TEMPORARY CONSTRUCTION EASEMENT
TDH	TOTAL DYNAMIC HEAD
TECH	TECHNICAL
TEL	TELEPHONE
TEMP	TEMPORARY, TEMPERATURE
TF	TOP FACE
T&G	TONGUE AND GROOVE
THD	THREAD
THK	THICK
TP	TURNING POINT, TEST PIT
TRANS	TRANSITION
TRANSV	TRANSVERSE
TS	TUBE STEEL
TOC	TOP OF CURB, TOP OF CONCRETE
TOF	TOP OF FOOTING
TOS	TOP OF STEEL
TOW	TOP OF WALL
TT	THRUST TIE
TYP	TYPICAL
t, T	THICKNESS
UBC	UNIFORM BUILDING CODE
UD	UNDERDRAIN
UG	UNDERGROUND
UH	UNIT HEATER
UNK	UNKNOWN
V	VENT, VOLT, VALVE
VAC	VACUUM
VAR	VENT ACID RESISTANT
VC	VERTICAL CURVE
VERT	VERTICAL
VPI	VERTICAL POINT OF INTERSECTION
VPS	VENEER PLASTER SYSTEM
VTR	VENT THRU ROOF
W/	WITH
W	WIDE FLANGE (BEAM), WEST, WATER
WC	WATER CLOSET
WD	WOOD
WH	WATER HEATER
WM	WATER METER
WR	WATER RESISTANT
WS	WATER SURFACE, WATER STOP
WSE	WATER SURFACE ELEVATION
WST	WEATHERING STEEL
WSP	WELDED STEEL PIPE
WT	WATER TIGHT
WTR	WATER
WW	WASHWATER
WWF	WELDED WIRE FABRIC
YD	YARD

NOTES:

1. CONTACT THE ENGINEER FOR ABBREVIATIONS NOT LISTED.
2. THIS IS A STANDARD LEGEND SHEET, THEREFORE, SOME SYMBOLS OR ABBREVIATIONS MAY APPEAR ON THIS SHEET AND MAY NOT BE UTILIZED ON THIS PROJECT.

NO.	REVISION	REV BY	CKD BY	DATE
1				-
				-
				-

SURPRISE ARIZONA

CITY OF SURPRISE
SPA 1 WRF CAPACITY
EXP FACILITY
RERATING

WATERWORKS ENGINEERS

GENERAL

ABBREVIATIONS

CHECKED JHM
DRAWN MC
DESIGN DB

30% SUBMITTAL

NOT FOR CONSTRUCTION

DATE
AUGUST 2022
PROJECT NUMBER
20-018
DRAWING NUMBER
G-00-004
SHEET NO. 4 OF

REUSE OF DOCUMENTS: THIS DOCUMENT, AND THE IDEAS AND DESIGN INCORPORATED HEREIN, AS AN INSTRUMENT OF PROFESSIONAL SEVICE, IS THE PROPERTY OF WATER WORKS ENGINEERS, LLC. AND IS NOT TO BE USED, IN WHOLE OR PART, FOR ANY OTHER PROJECT WITHOUT THE WRITTEN AUTHORIZATION OE WATER WORKS ENGINEERS,LLC.

FILE PATH: BIM 360://20-018 SPA 1 WRF Capacity Exp Facility Rerating/2018D-M-Blower Building.rvt

DATE AND TIME: 7/22/2022 11:07:52 AM

DISCIPLINE

LETTER	DISCIPLINE
G	GENERAL
D	DEMOLITION
C	CIVIL YARD
A	ARCHITECTURAL
S	STRUCTURAL
M	MECHANICAL
H	HEATING, VENTILATION AND COOLING
P	PLUMBING
E	ELECTRICAL
N	INSTRUMENTATION

DRAWING NUMBERING

NUMBER SERIES	DRAWING TYPE
000	GENERAL - NOTES, LEGENDS, ABBREVIATIONS, AND DIAGRAMS
100	PLANS
200	SECTIONS
300	DETAILS
400	ELEVATIONS OR ISOMETRICS
500	SCHEMATICS
600	SCHEDULES
700	NOT USED
800	NOT USED
900	MISCELLANEOUS

DRAWING NUMBER

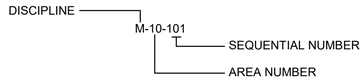

SECTION

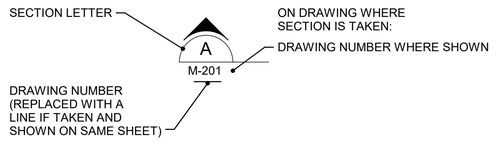

DETAIL

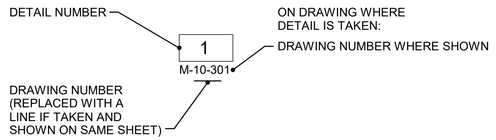

STANDARD DETAIL

NOTES:

1. STANDARD DETAIL CALLOUTS ARE SHOWN TO INDICATE DETAIL REQUIRED AT SPECIFIC LOCATIONS. DETAILS ARE NOT CALLED OUT AT ALL LOCATIONS.
   WHERE A STANDARD DETAIL CALLOUT IS NOT SHOWN, THE CONTRACTOR SHALL USE THE STANDARD DETAIL MOST APPLICABLE AND CONSISTENT WITH OTHER WORK UNDER THIS CONTRACT.

LINE TYPE APPEARANCE

BLACK	NEW 'ON' DISCIPLINE
LIGHT OR MEDIUM GRAY OR SCREENED	EXISTING 'ON' OR 'OFF' DISCIPLINE
DARK GRAY	NEW 'OFF' DISCIPLINE
BLACK	NEW 'ON' DISCIPLINE

GENERAL SYMBOLOGY

PIPING DESIGNATION

DOUBLE LINE

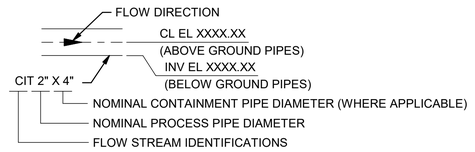

SINGLE LINE

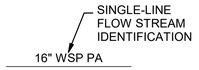

NO.	REVISION	REV BY	CKD BY	DATE
-	-	-	-	-

CITY OF SURPRISE
SPA 1 WRF CAPACITY
EXP FACILITY
RERATING

WATER WORKS ENGINEERS

GENERAL

STANDARD DESIGNATIONS

CHECKED JHM
DRAWN MC
DESIGN DB

30% SUBMITTAL

NOT FOR CONSTRUCTION

DATE: AUGUST 2022
PROJECT NUMBER 20-018
DRAWING NUMBER G-00-005
SHEET NO. 5 OF

REUSE OF DOCUMENTS: THIS DOCUMENT, AND THE IDEAS AND DESIGN INCORPORATED HEREIN, AS AN INSTRUMENT OF PROFESSIONAL SEVICE, IS THE PROPERTY OF WATER WORKS ENGINEERS, LLC. AND IS NOT TO BE USED, IN WHOLE OR PART, FOR ANY OTHER PROJECT WITHOUT THE WRITTEN AUTHORIZATION OE WATER WORKS ENGINEERS,LLC.

FILE PATH: BIM 360://20-018 SPA 1 WRF Capacity Exp Facility Rerating/2018D-M-Blower Building.rvt

DATE AND TIME: 7/22/2022 11:07:53 AM

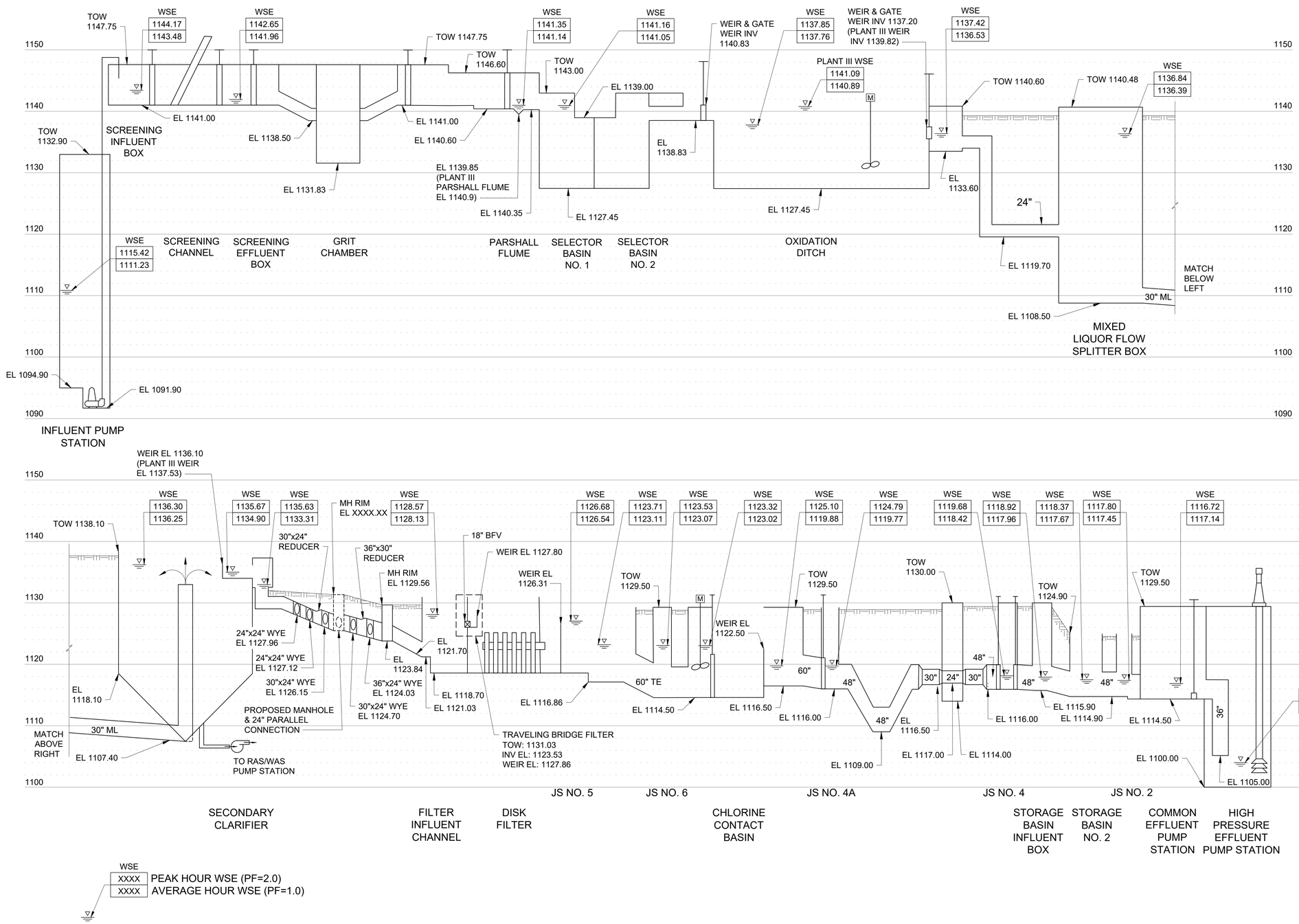

NO.	REVISION	REV BY	CKD BY	DATE
-	-	-	-	-

SURPRISE ARIZONA

CITY OF SURPRISE
SPA 1 WRF CAPACITY EXP
FACILITY RERATING

WATERWORKS ENGINEERS

GENERAL

HYDRAULIC PROFILE

CHECKED JHM
DRAWN NR
DESIGN MB

30% SUBMITTAL

NOT FOR CONSTRUCTION

DATE
AUGUST 2022

PROJECT NUMBER
20-018

DRAWING NUMBER
G-00-006

SHEET NO. -

REUSE OF DOCUMENTS: THIS DOCUMENT, AND THE IDEAS AND DESIGN INCORPORATED HEREIN, AS AN INSTRUMENT OF PROFESSIONAL SEVICE, IS THE PROPERTY OF WATER WORKS ENGINEERS, LLC. AND IS NOT TO BE USED, IN WHOLE OR PART, FOR ANY OTHER PROJECT WITHOUT THE WRITTEN AUTHORIZATION OE WATER WORKS ENGINEERS,LLC.

FILE PATH: File Path

DATE AND TIME: 10/11/2013 3:33:16 PM

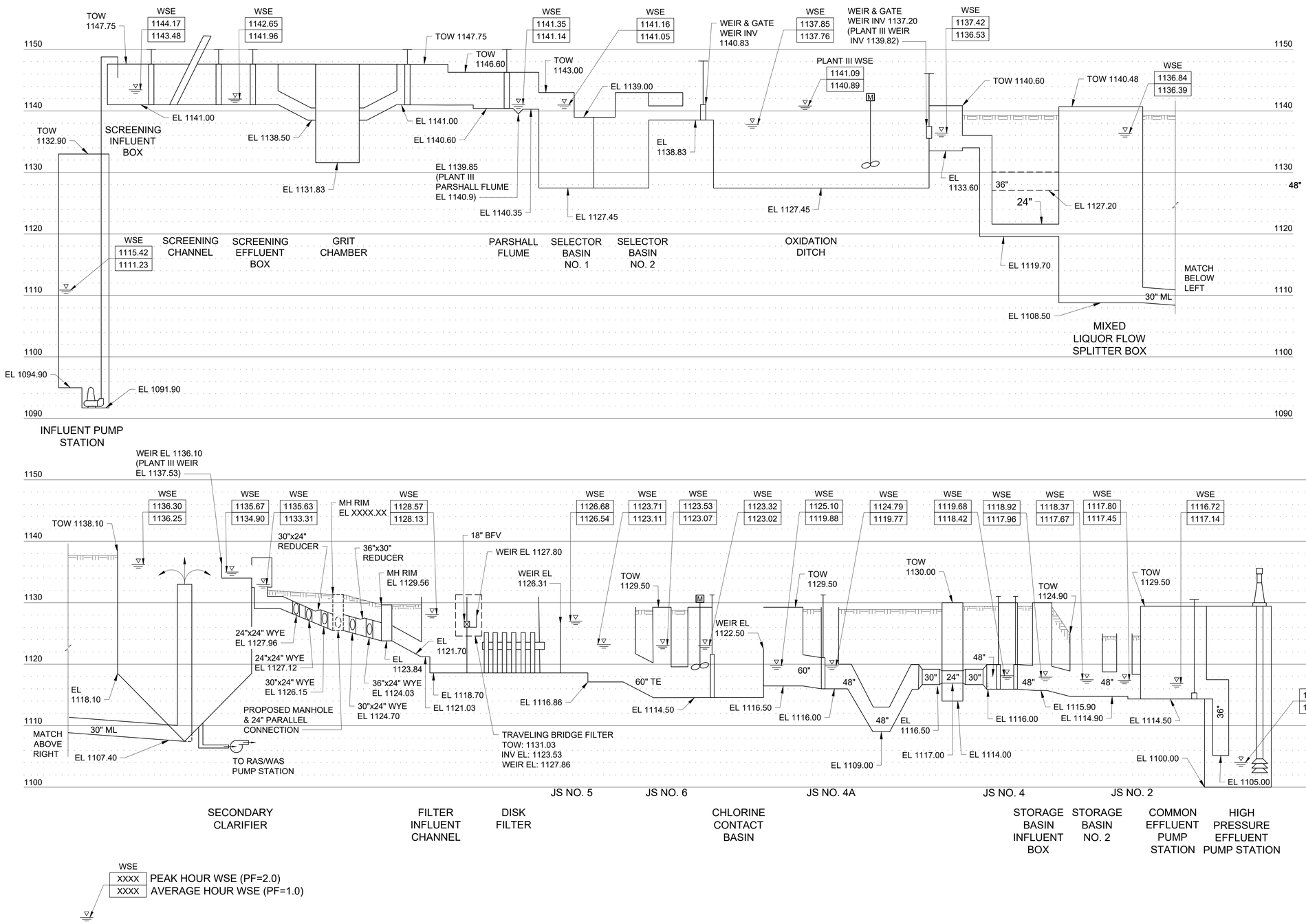

NO.	REVISION	REV BY	CKD BY	DATE
-	-	-	-	-

SURPRISE ARIZONA

CITY OF SURPRISE
SPA 1 WRF CAPACITY EXP
FACILITY RERATING

WATERWORKS ENGINEERS

GENERAL

HYDRAULIC PROFILE 2

CHECKED JHM
DRAWN NR
DESIGN MB

30% SUBMITTAL

NOT FOR CONSTRUCTION

DATE
AUGUST 2022

PROJECT NUMBER
20-018

DRAWING NUMBER
G-00-007

SHEET NO. -

REUSE OF DOCUMENTS: THIS DOCUMENT, AND THE IDEAS AND DESIGN INCORPORATED HEREIN, AS AN INSTRUMENT OF PROFESSIONAL SEVICE, IS THE PROPERTY OF WATER WORKS ENGINEERS, LLC. AND IS NOT TO BE USED, IN WHOLE OR PART, FOR ANY OTHER PROJECT WITHOUT THE WRITTEN AUTHORIZATION OE WATER WORKS ENGINEERS,LLC.

FILE PATH: File Path

DATE AND TIME: 10/11/2013 3:33:16 PM

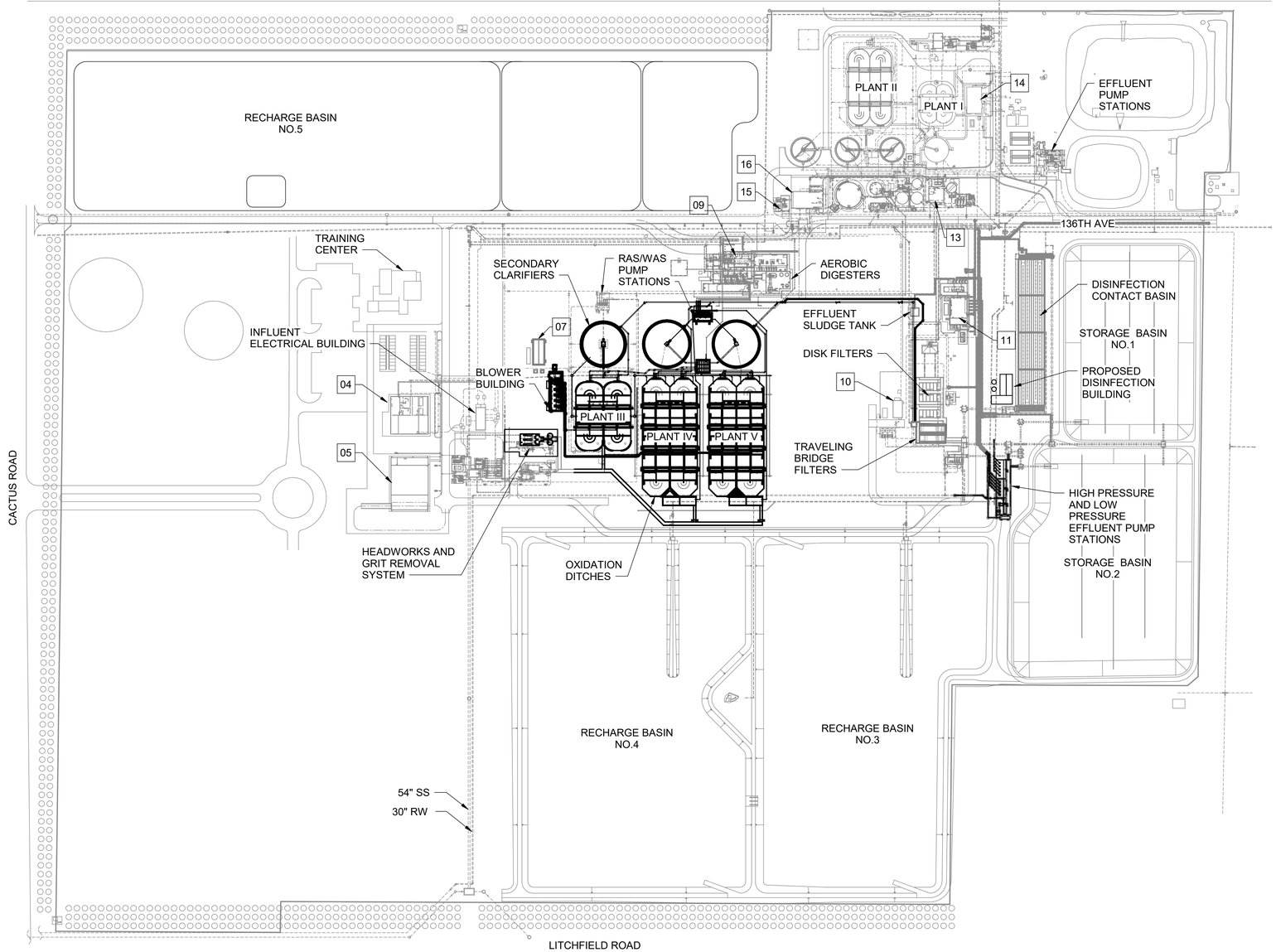

PLAN
1" = 160'-0"

NORTH

BUILDING ##

04	OPERATIONS BUILDING
05	MAINTENANCE BUILDING
07	OXIDATION ELECTRICAL BUILDING
09	THICKENING BUILDING
10	EFFLUENT ELECTRICAL BUILDING
11	DISINFECTION BUILDING
13	PLANTS I AND II THICKENING BUILDING
14	PLANTS I AND II ADMIN BUILDING
15	PLANTS IV AND V DEWATERING BUILDING
16	DEWATERING BUILDING

160 0 160 320 FEET
SCALE 1"=160'

30% SUBMITTAL

NOT FOR CONSTRUCTION

NO.	REVISION	REV BY	CKD BY	DATE
1	-	-	-	-

SURPRISE
ARIZONA

CITY OF SURPRISE
SPA 1 WRF CAPACITY
EXP FACILITY
RERATING

WATER WORKS ENGINEERS

GENERAL

SPA1 WRF
MASTER SITE PLAN

CHECKED Checker
DRAWN Author
DESIGN Designer

DATE
AUGUST 2022

PROJECT NUMBER
20-018

DRAWING NUMBER
G-00-008

SHEET NO. 8 OF 31

REUSE OF DOCUMENTS: THIS DOCUMENT, AND THE IDEAS AND DESIGN INCORPORATED HEREIN, AS AN INSTRUMENT OF PROFESSIONAL SEVICE, IS THE PROPERTY OF WATER WORKS ENGINEERS, LLC. AND IS NOT TO BE USED, IN WHOLE OR PART, FOR ANY OTHER PROJECT WITHOUT THE WRITTEN AUTHORIZATION OE WATER WORKS ENGINEERS,LLC.

FILE PATH: BIM 360://20-018 SPA 1 WRF Capacity Exp Facility Rerating/2018D-M-Blower Building.rvt

DATE AND TIME: 8/11/2022 4:43:05 PM

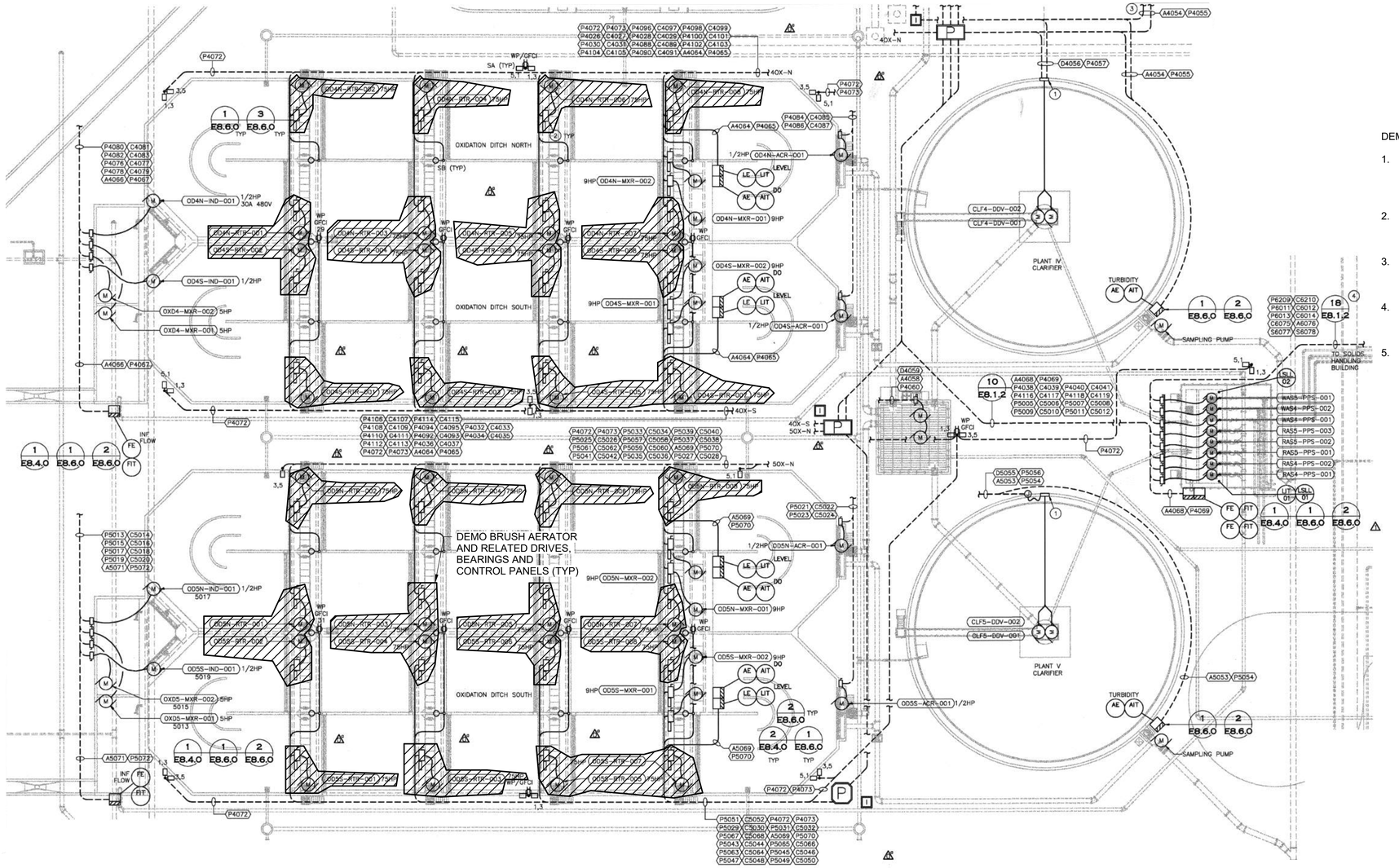

PLAN
NTS

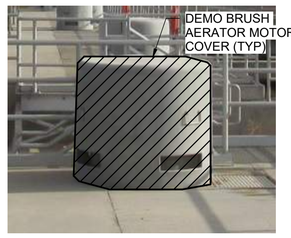

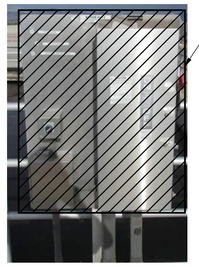

ISOMETRIC
NTS

DEMOLITION NOTES:

1. DEMOLITION OF PLANT IV SHALL OCCUR FIRST. AFTER INSTALLATION AND STARTUP OF PLANT IV, DEMOLITION OF PLANT V SHALL COMMENCE.
2. CONTRACTOR SHALL INSPECT AND PATCH EXISTING FLOOR AND WALLS OF OXIDATION DITCHES.
3. PROVIDE COVER PLATES FOR PENETRATIONS WHERE BRUSH AERATOR EQUIPMENT WAS REMOVED.
4. PROTECT IN PLACE EXISTING MIXERS AND STRUCTURAL COMPONENTS OF OXIDATION DITCHES.
5. ANCHORS NOT COMPLETELY REMOVED SHALL BE GRIND SMOOTH TO FINISH FLOOR. GROUT FILL ALL OTHER VOIDS FROM REMOVAL OF ANCHORS.

NO.	REVISION	REV BY	CKD BY	DATE
-	-	-	-	-

SURPRISE
ARIZONA

CITY OF SURPRISE
SPA 1 WRF CAPACITY
EXP FACILITY
RERATING

WATERWORKS ENGINEERS

30% SUBMITTAL

NOT FOR CONSTRUCTION

DEMOLITION
PLANTS IV & V OXIDATION DITCHES
DEMOLITION PLAN

DESIGN DB | DRAWN MC | CHECKED JHM

DATE
AUGUST 2022

PROJECT NUMBER
20-018

DRAWING NUMBER
D-00-100

SHEET NO. 9 OF

REUSE OF DOCUMENTS: THIS DOCUMENT, AND THE IDEAS AND DESIGN INCORPORATED HEREIN, AS AN INSTRUMENT OF PROFESSIONAL SEVICE, IS THE PROPERTY OF WATER WORKS ENGINEERS, LLC. AND IS NOT TO BE USED, IN WHOLE OR PART, FOR ANY OTHER PROJECT WITHOUT THE WRITTEN AUTHORIZATION OE WATER WORKS ENGINEERS,LLC.

FILE PATH: BIM 360://20-018 SPA 1 WRF Capacity Exp Facility Rerating/2018D-M-Blower Building.rvt

DATE AND TIME: 8/11/2022 5:15:18 PM

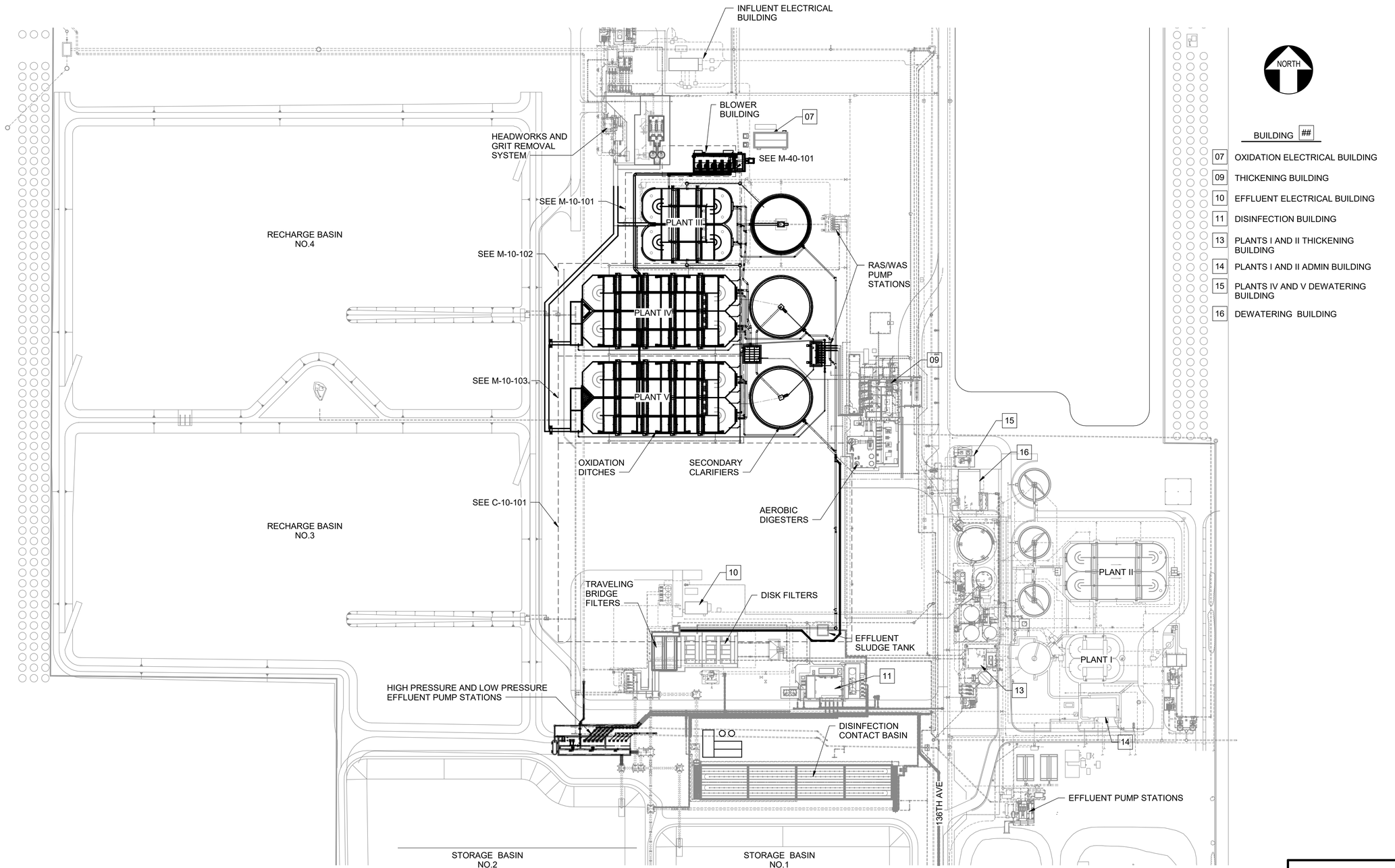

PLAN
1" = 100'-0"

NO.	REVISION	REV BY	CKD BY	DATE
1	-	-	-	-

SURPRISE
ARIZONA

CITY OF SURPRISE
SPA 1 WRF CAPACITY
EXP FACILITY
RERATING

WATER WORKS ENGINEERS

CIVIL

OVERALL SITE PLAN

CHECKED JHM
DRAWN MC
DESIGN DB

30% SUBMITTAL

NOT FOR CONSTRUCTION

DATE
AUGUST 2022
PROJECT NUMBER
20-018
DRAWING NUMBER
C-00-101
SHEET NO. 10 OF 31

REUSE OF DOCUMENTS: THIS DOCUMENT, AND THE IDEAS AND DESIGN INCORPORATED HEREIN, AS AN INSTRUMENT OF PROFESSIONAL SEVICE, IS THE PROPERTY OF WATER WORKS ENGINEERS, LLC. AND IS NOT TO BE USED, IN WHOLE OR PART, FOR ANY OTHER PROJECT WITHOUT THE WRITTEN AUTHORIZATION OE WATER WORKS ENGINEERS,LLC

FILE PATH: BIM 360://20-018 SPA 1 WRF Capacity Exp Facility Rerating/2018D-M-Blower Building.rvt

DATE AND TIME: 8/11/2022 5:14:25 PM

NORTH

MATCH LINE ON DRAWING M-10-103

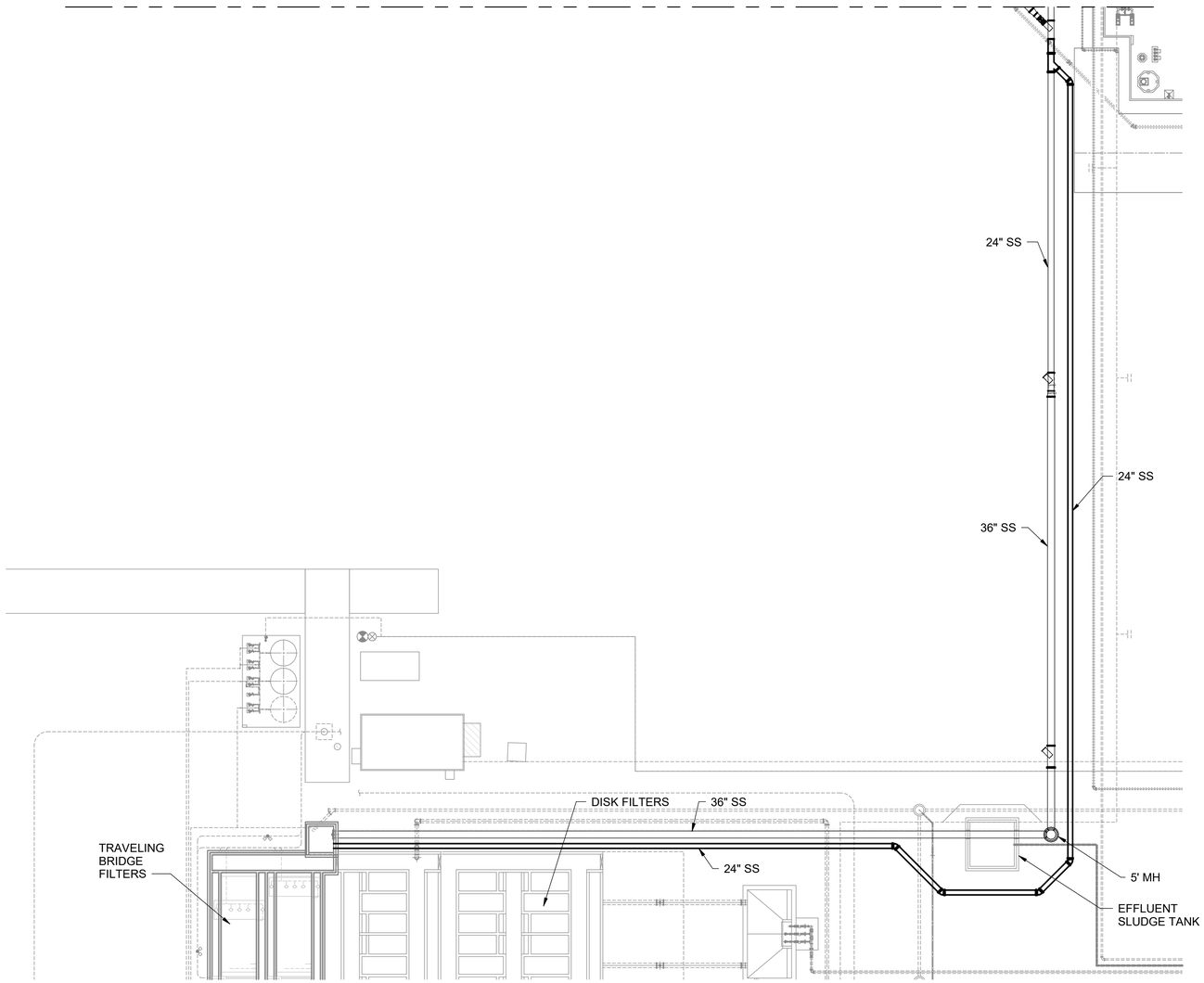

PLAN
1" = 30'-0"

30 0 30 60 FEET
SCALE 1"=30'

30% SUBMITTAL

NOT FOR CONSTRUCTION

NO.	REVISION	REV BY	CKD BY	DATE
-	-	-	-	-

SURPRISE
ARIZONA

CITY OF SURPRISE
SPA 1 WRF CAPACITY
EXP FACILITY
RERATING

WATERWORKS ENGINEERS

CIVIL

YARD PIPING

CHECKED JHM
DRAWN MC
DESIGN DB

DATE
AUGUST 2022
PROJECT NUMBER
20-018
DRAWING NUMBER
C-10-101
SHEET NO. 11 OF 31

REUSE OF DOCUMENTS: THIS DOCUMENT, AND THE IDEAS AND DESIGN INCORPORATED HEREIN, AS AN INSTRUMENT OF PROFESSIONAL SEVICE, IS THE PROPERTY OF WATER WORKS ENGINEERS, LLC. AND IS NOT TO BE USED, IN WHOLE OR PART, FOR ANY OTHER PROJECT WITHOUT THE WRITTEN AUTHORIZATION OE WATER WORKS ENGINEERS,LLC.

FILE PATH: BIM 360://20-018 SPA 1 WRF Capacity Exp Facility Rerating/2018D-M-Blower Building.rvt

DATE AND TIME: 8/11/2022 4:22:14 PM

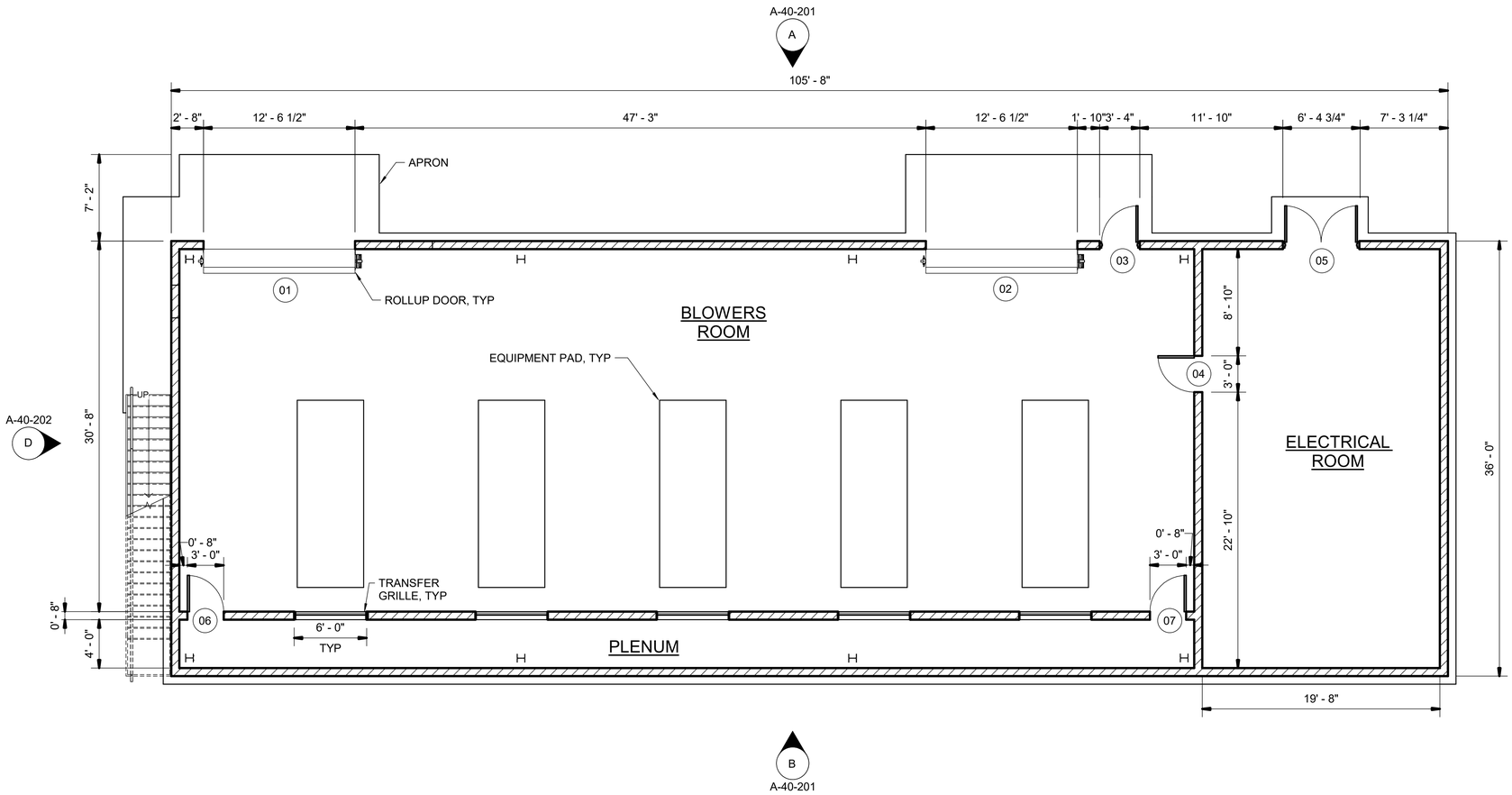

PLAN
3/16" = 1'-0"

NORTH

NO.	REVISION	REV BY	CKD BY	DATE
-	-	-	-	-

SURPRISE
ARIZONA

CITY OF SURPRISE
SPA1 WRF CAPACITY
EXP FACILITY
RERATING

WATERWORKS ENGINEERS

ARCHITECTURAL

BLOWER BUILDING

CHECKED Checker
DRAWN Author
DESIGN DB

4 0 4 8 FEET
SCALE 3/16"=1'-0"

30% SUBMITTAL

NOT FOR CONSTRUCTION

DATE
AUGUST 2022
PROJECT NUMBER
20-018
DRAWING NUMBER
A-40-101
SHEET NO. 12 OF

REUSE OF DOCUMENTS: THIS DOCUMENT, AND THE IDEAS AND DESIGN INCORPORATED HEREIN, AS AN INSTRUMENT OF PROFESSIONAL SEVICE, IS THE PROPERTY OF WATER WORKS ENGINEERS, LLC. AND IS NOT TO BE USED, IN WHOLE OR PART, FOR ANY OTHER PROJECT WITHOUT THE WRITTEN AUTHORIZATION OE WATER WORKS ENGINEERS,LLC.

FILE PATH: BIM 360://20-018 SPA 1 WRF Capacity Exp Facility Rerating/2018D-S-Blower Building.rvt

DATE AND TIME: 7/22/2022 11:16:31 AM

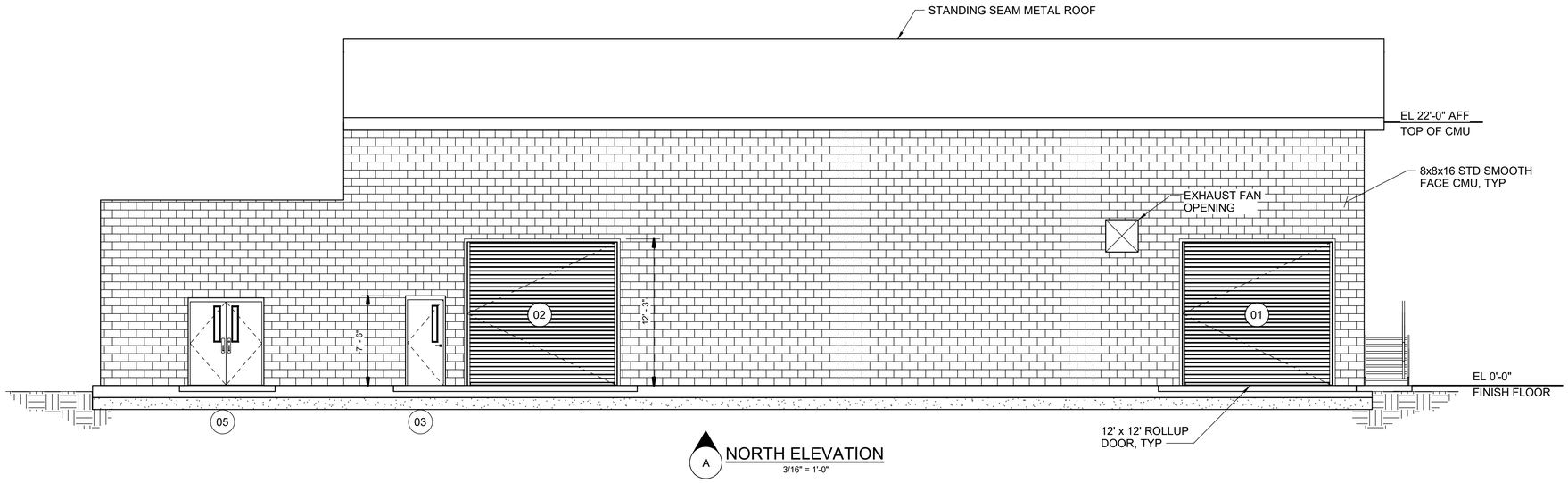

A NORTH ELEVATION
3/16" = 1'-0"

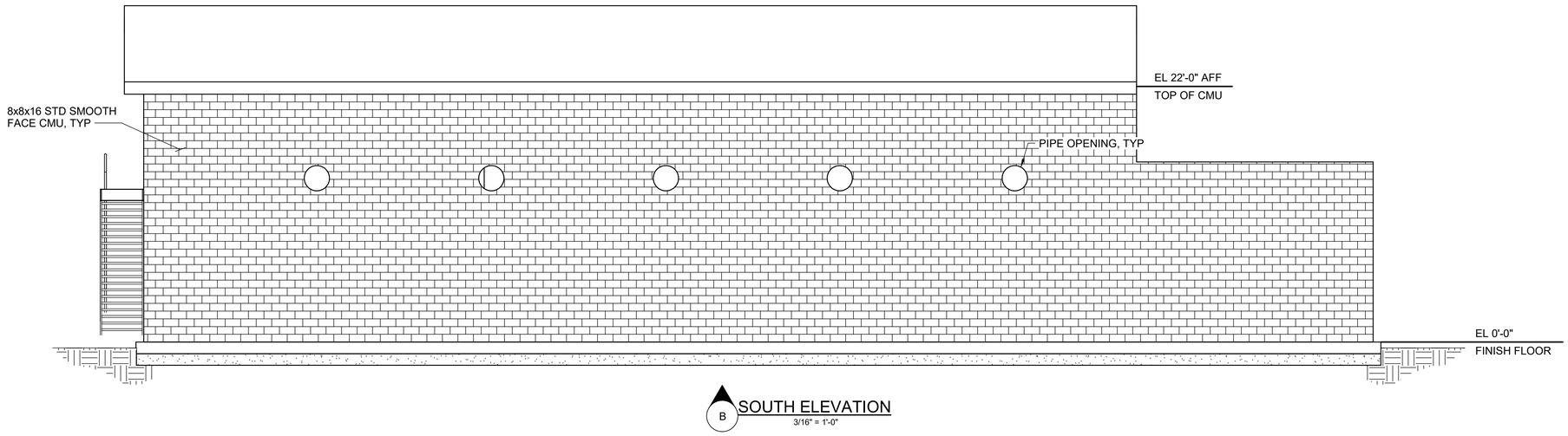

B SOUTH ELEVATION
3/16" = 1'-0"

4 0 4 8 FEET
SCALE 3/16"=1'-0"

30% SUBMITTAL

NOT FOR CONSTRUCTION

NO.	REVISION	REV BY	CKD BY	DATE
-	-	-	-	-

SURPRISE ARIZONA

CITY OF SURPRISE
SPA1 WRF CAPACITY
EXP FACILITY
RERATING

WATERWORKS ENGINEERS

ARCHITECTURAL
BLOWER BUILDING
NORTH & SOUTH

CHECKED JHM
DRAWN Author
DESIGN DB

DATE
AUGUST 2022

PROJECT NUMBER
20-018

DRAWING NUMBER
A-40-201

SHEET NO. 13 OF

REUSE OF DOCUMENTS: THIS DOCUMENT, AND THE IDEAS AND DESIGN INCORPORATED HEREIN, AS AN INSTRUMENT OF PROFESSIONAL SEVICE, IS THE PROPERTY OF WATER WORKS ENGINEERS, LLC. AND IS NOT TO BE USED, IN WHOLE OR PART, FOR ANY OTHER PROJECT WITHOUT THE WRITTEN AUTHORIZATION OE WATER WORKS ENGINEERS,LLC.

FILE PATH: BIM 360://20-018 SPA 1 WRF Capacity Exp Facility Rerating/2018D-S-Blower Building.rvt

DATE AND TIME: 7/22/2022 11:16:32 AM

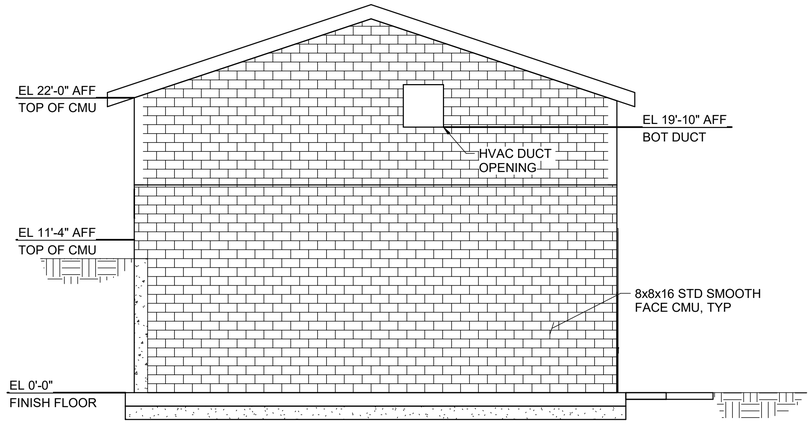

C EAST ELEVATION
3/16" = 1'-0"

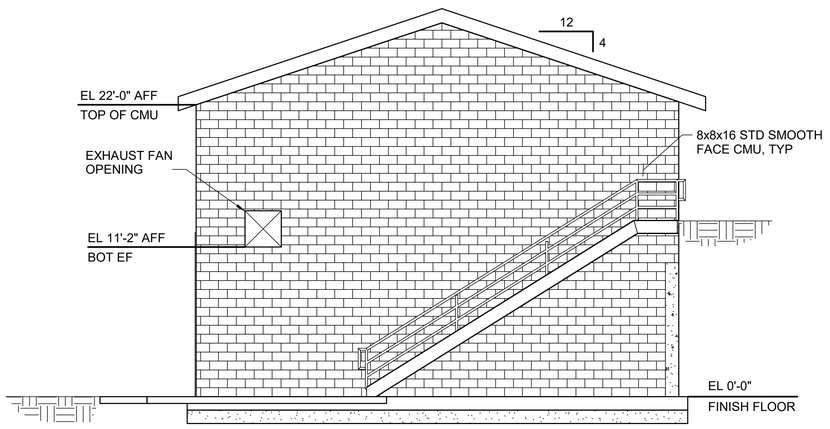

D WEST ELEVATION
3/16" = 1'-0"

4 0 4 8 FEET
SCALE 3/16"=1'-0"

30% SUBMITTAL

NOT FOR CONSTRUCTION

NO.	REVISION	REV BY	CKD BY	DATE
-	-	-	-	-

SURPRISE
ARIZONA

CITY OF SURPRISE
SPA1 WRF CAPACITY
EXP FACILITY
RERATING

WATERWORKS ENGINEERS

ARCHITECTURAL
BLOWER BUILDING
EAST & WEST

CHECKED JHM
DRAWN MC
DESIGN DB

DATE
AUGUST 2022
PROJECT NUMBER
20-018
DRAWING NUMBER
A-40-202
SHEET NO. 14 OF

REUSE OF DOCUMENTS: THIS DOCUMENT, AND THE IDEAS AND DESIGN INCORPORATED HEREIN, AS AN INSTRUMENT OF PROFESSIONAL SEVICE, IS THE PROPERTY OF WATER WORKS ENGINEERS, LLC. AND IS NOT TO BE USED, IN WHOLE OR PART, FOR ANY OTHER PROJECT WITHOUT THE WRITTEN AUTHORIZATION OE WATER WORKS ENGINEERS,LLC.

FILE PATH: BIM 360://20-018 SPA 1 WRF Capacity Exp Facility Rerating/2018D-S-Blower Building.rvt

DATE AND TIME: 7/22/2022 11:16:33 AM

DESIGN CRITERIA:

1. APPLICABLE CODE: 2018 INTERNATIONAL BUILDING CODE (IBC).

2. ROOF LOAD:
   - ROOF LIVE LOAD 20 psf

3. WIND LOAD:
   - RISK CATEGORY IV
   - BASIC WIND SPEED (ASCE 7-16) 115 mph
   - EXPOSURE CATEGORY B
   - DESIGN METHOD DIRECTIONAL PROCEDURE

4. SEISMIC LOAD:
   - RISK CATEGORY IV
   - IMPORTANCE FACTOR I_e 1.5
   - S_s: 0.193 S_{DS}: 0.206
   - S_1: 0.075 S_{D1}: 0.119
   - SITE CLASS D
   - SEISMIC DESIGN CATEGORY B

GENERAL INFORMATION:

1. ALL CONSTRUCTION SHALL CONFORM TO THE LATEST EDITION OF THE BUILDING CODE.

2. DESIGN DETAILS ARE INTENDED TO BE TYPICAL AND SHALL APPLY TO ALL SIMILAR SITUATIONS OCCURRING THROUGHOUT THE PROJECT, WHETHER OR NOT THEY ARE KEYED IN EACH LOCATION. CONSULT THE ENGINEER FOR REVIEW PRIOR TO CONSTRUCTION.

3. VERIFY ALL OPENING DIMENSIONS IN WALLS, SLABS, AND DECKS WITH THE ARCHITECTURAL, MECHANICAL, HVAC AND ELECTRICAL DRAWINGS.

4. FOR NUMBER, TYPE, SIZE, ARRANGEMENT, AND/OR LOCATION OF EQUIPMENT PADS AND OPENINGS SEE ARCHITECTURAL, MECHANICAL, ELECTRICAL, HVAC AND PLUMBING DRAWINGS. COORDINATE ALL OPENINGS AND EQUIPMENT PADS WITH OTHER DISCIPLINES AND EQUIPMENT SUPPLIERS PRIOR TO PLACING SLABS, WALLS, AND FOUNDATIONS.

5. NO STRUCTURAL MEMBER SHALL BE CUT FOR PIPES, DUCTS, ETC UNLESS SPECIFICALLY DETAILED OR APPROVED IN WRITING BY THE ENGINEER.

FOUNDATIONS:

1. FOUNDATIONS HAVE BEEN DESIGNED PER THE MINIMUM CODE ALLOWABLE VALUES:
   - ALLOWABLE BEARING, DEAD + LIVE LOADS 1500 psf
   - MINIMUM FOOTING EMBEDMENT 12 INCHES
   - SLIDING FRICTION COEFFICIENT 0.25

2. NO BACKFILL SHALL BE PLACED BEHIND CANTILEVERED, FREE TOP WALLS UNTIL THE CONCRETE HAS ATTAINED 100% OF ITS SPECIFIED COMPRESSIVE STRENGTH.

3. NO BACKFILL SHALL BE PLACED BEHIND WALLS THAT ARE CONNECTED TO ELEVATED FLOOR OR ROOF SLABS OR DECKS UNTIL THE FLOOR OR ROOF SLAB HAS ATTAINED 100% OF ITS SPECIFIED COMPRESSIVE STRENGTH AND ALL ROOF AND FLOOR DECKING IS IN PLACE AND WELDED, SCREWED, OR NAILED AS APPROPRIATE.

4. GRADE TO DRAIN AWAY FROM STRUCTURES A MINIMUM GRADE OF 5% FOR A MINIMUM OF 10'-0" FROM STRUCTURE PERIMETER.

5. THE CONTRACTOR SHALL PROVIDE THE ENGINEER AT LEAST 48 BUSINESS HOURS NOTICE FOLLOWING EXCAVATION FOR FOUNDATIONS AND PRIOR TO THE PLACEMENT OF FORMWORK, REINFORCING STEEL AND CONCRETE.

FORMWORK, SHORING AND BRACING:

1. THE STRUCTURES SHOWN ON THE DRAWINGS HAVE BEEN DESIGNED FOR STABILITY UNDER FINAL CONDITIONS ONLY. THE DESIGN SHOWN DOES NOT INCLUDE THE NECESSARY COMPONENTS OR EQUIPMENT FOR THE STABILITY OF THE STRUCTURE DURING CONSTRUCTION. THE CONTACTOR IS RESPONSIBLE FOR ALL WORK RELATING TO CONSTRUCTION ERECTION METHODS, BRACING, SHORING, RIGGING, GUYS SCAFFOLDING, FORMWORK, AND OTHER WORK AIDS REQUIRED TO SAFELY PERFORM THE WORK SHOWN. CONSTRUCTION OF SHORING AND BRACING OF FORMWORK SHALL BE IN ACCORDANCE WITH ACI 347 "GUIDE TO FORMWORK FOR CONCRETE".

CONCRETE:

1. STRUCTURAL CONCRETE SHALL HAVE A MINIMUM COMPRESSIVE STRENGTH OF 4,000 PSI AT 28 DAYS AND A SLUMP AS SPECIFIED IN SECTION 03300 - CAST-IN-PLACE CONCRETE.

2. THE CONTRACTOR SHALL SUBMIT THE CONCRETE MIX DESIGNS TO THE ENGINEER FOR REVIEW AND APPROVAL PRIOR TO USE.

3. HORIZONTAL CONSTRUCTION JOINTS SHALL BE PREPARED TO EXPOSE CLEAN, SOLIDLY EMBEDDED AGGREGATE OVER THE ENTIRE JOINT INTERFACE.

4. PLACEMENT OF PIPES, CONDUITS OR OTHER EMBEDDED ITEMS IN THE CONCRETE SHALL BE IN ACCORDANCE WITH THESE DRAWINGS OR SHALL BE APPROVED BY THE ENGINEER.

5. NO ALUMINUM OR ANY OTHER MATERIAL INJURIOUS TO CONCRETE SHALL BE EMBEDDED IN THE CONCRETE.

6. CONCRETE SHALL BE MIXED AND DELIVERED IN ACCORDANCE WITH ASTM C94.

7. THE REQUIREMENTS FOR CONCRETE MIXES, PLACING, TESTING AND CURING ARE CONTAINED IN THE PROJECT SPECIFICATIONS.

8. PORTLAND CEMENT SHALL CONFORM TO ASTM C150 TYPE II, AGGREGATE SHALL CONFORM TO ASTM C33.

9. CONTINUOUS WATERSTOP, AS SPECIFIED, SHALL BE INSTALLED IN ALL EXPANSION, CONTRACTION, CONTROL AND CONSTRUCTION JOINTS IN WALLS AND SLABS OF CONTAINMENT STRUCTURES, WATER HOLDING BASINS, CHANNELS, AND BELOW GRADE STRUCTURES, EXCEPT WHERE SPECIFICALLY NOTED OTHERWISE.

10. THE CONCRETE JOINTS IN SLABS AND WALLS, AS SHOWN, ARE MINIMUM REQUIREMENTS. CONTRACTOR MAY SUBMIT ALTERNATE CONSTRUCTION JOINT LAYOUT DRAWINGS, SUBJECT TO SPECIFIED REQUIREMENTS, TO THE ENGINEER FOR REVIEW AND APPROVAL PRIOR TO CONSTRUCTION.

11. THE CONTRACTOR SHALL PROVIDE THE ENGINEER AT LEAST 48 BUSINESS HOURS NOTICE PRIOR TO THE PLACEMENT OF CONCRETE TO ALLOW SUFFICIENT TIME FOR INSPECTIONS AND SCHEDULING OF TESTING SERVICES.

CONCRETE REINFORCING:

1. CLEARANCE FOR REINFORCEMENT BARS, UNLESS SHOWN OTHERWISE, SHALL BE: CAST AGAINST EARTH = 3", SURFACES OF PRIMARY AND SECONDARY LIQUID CONTAINING STRUCTURES = 2", ALL OTHER CONCRETE SURFACES: #5 BAR OR SMALLER = 1 1/2", #6 BAR OR LARGER = 2".

2. REFER TO WALL CORNER AND WALL INTERSECTION REINFORCING DETAIL 3303. WALL CORNER REINFORCING SIZES AND SPACINGS SHALL BE AS SHOWN ON THE DRAWINGS AND REFERENCED TO THIS DETAIL. TYPICAL HORIZONTAL WALL REINFORCING SHALL LAP WITH THE CORNER HORIZONTAL REINFORCING.

3. PROVIDE A MINIMUM OF TWO VERTICAL WALL BARS WITH MATCHING DOWELS AT WALL ENDS, CORNERS, AND INTERSECTIONS WITH SIZE TO MATCH TYPICAL VERTICAL REINFORCING STEEL AS SHOWN. VERTICAL WALL BARS SHALL BE LAPPED WITH DOWELS FROM BASE SLABS AND EXTENDED INTO THE TOP FACE OF ROOF SLABS AND LAPPED WITH TOP SLAB REINFORCEMENT.

4. ALL BENDS, UNLESS OTHERWISE SHOWN, SHALL BE 90 DEGREE ACI 318 STANDARD HOOKS.

5. ALL REINFORCING BENDS AND LAPS, UNLESS OTHERWISE NOTED, SHALL SATISFY THE FOLLOWING MINIMUM REQUIREMENTS:

CONCRETE DESIGN STRENGTH = 4,000 PSI #		GRADE 60 REINFORCED STEEL						
BAR SIZE		#4	#5	#6	#7	#8	#9	#10
LAP SPLICE LENGTH								
SPACING <6"	TOP BAR *	2'-8"	3'-4"	4'-0"	5'-10"	6'-8"	8'-6"	10'-10"
	OTHER BAR	2'-1"	2'-7"	3'-1"	4'-6"	5'-2"	6'-7"	8'-4"
SPACING ≥6"	TOP BAR *	1'-8"	2'-0"	2'-5"	3'-6"	4'-0"	5'-0"	6'-2"
	OTHER BAR	1'-4"	1'-7"	1'-10"	2'-9"	3'-1"	3'-10"	4'-9"

* TOP BARS SHALL BE DEFINED AS ANY HORIZONTAL BARS PLACED SUCH THAT MORE THAN 12" OF CONCRETE IS CAST IN THE MEMBER BELOW THE BAR IN ANY SINGLE POUR. HORIZONTAL WALL BARS ARE CONSIDERED TOP BARS.

\# WHERE 3,000 PSI CONCRETE IS USED, INCREASE ABOVE LENGTHS BY 16%.

MASONRY:

1. SOLID GROUT ALL CELLS UNLESS INDICATED OTHERWISE.

2. MORTAR SHALL CONFORM TO ASTM C270, TYPE S, HYDRATED AND SHALL HAVE A MINIMUM 28 DAY COMPRESSIVE STRENGTH OF 1,800 PSI.

3. GROUT SHALL CONFORM TO ASTM C476 AND SHALL HAVE A MINIMUM 28 DAY COMPRESSIVE STRENGTH OF 2,000 PSI CONTAINING NO MASONRY CEMENT.

4. CONCRETE BLOCK UNITS SHALL BE MEDIUM WEIGHT AND CONFORM TO ASTM C90 AND SHALL HAVE A MINIMUM 28 DAY COMPRESSIVE STRENGTH OF 1,900 PSI. LINEAR SHRINKAGE SHALL NOT EXCEED 0.065 PERCENT.

5. PLACE COURSES IN RUNNING BOND PATTERN, UNLESS SPECIFICALLY INDICATED OTHERWISE.

6. REINFORCING STEEL FOR MASONRY SHALL CONFORM TO ASTM A615, GRADE 60 FOR DEFORMED BARS. LAP VERTICAL REINFORCING 48 BAR DIAMETERS. LAP VERTICAL REINFORCING IN CANTILEVER WALLS 72 BAR DIAMETERS. LAP HORIZONTAL REINFORCING 48 BAR DIAMETERS. STAGGER ADJACENT LAP SPLICES BY 24 INCHES, WHEN SEPARATED BY 3 INCHES OR LESS. REFERENCE STANDARD DETAIL 4002 - REINFORCED CMU WALL.

7. HORIZONTAL REINFORCING BARS SHALL BE CONTINUOUS AROUND WALL CORNERS AND THROUGH WALL INTERSECTIONS AND HOOKED AT WALL ENDS AS SHOWN IN THE DETAILS.

8. VERTICAL REINFORCING SHALL BE PLACED AT CORNERS, EACH SIDE OF OPENINGS, END WALLS (INCLUDING EACH SIDE OF CONTROL JOINTS), AT A MAXIMUM SPACING INDICATED IN THE DRAWINGS, AND CONTINUOUS FROM FOUNDATION TO TOP OF WALL.

9. CMU REINFORCING AT WALL INTERSECTIONS AND CORNERS SHALL BE AS INDICATED IN STANDARD DETAIL 4001 - CMU WALL CORNERS, UNLESS INDICATED OTHERWISE.

10. CMU REINFORCING AT ALL WALL ENDS, JAMBS AND DOOR OPENINGS, WINDOW LINTELS, LOUVERS AND PENETRATIONS SHALL BE INDICATED IN STANDARD DETAIL 4004 - CMU OPENINGS GREATER THAN 3'-0" OR STANDARD DETAIL 4003 - CMU OPENINGS LESS THAN 3'-0", UNLESS INDICATED OTHERWISE.

11. CMU WALL CONTROL JOINTS SHALL BE LOCATED WHERE SHOWN ON THE DRAWINGS AND SHALL RUN CONTINUOUS FROM THE TOP OF FOUNDATION TO TOP OF WALL OR PARAPET. ALL HORIZONTAL NON-STRUCTURAL BARS SHALL BE TERMINATED IN A STANDARD HOOK EACH SIDE OF JOINT. STRUCTURAL BARS SHALL BE CONTINUOUS THROUGH CONTROL JOINTS.

ROUGH CARPENTRY:

1. DIMENSIONS ARE TYPICALLY SHOWN TO FACE OF STUD FOR EXTERIOR WALLS, CENTERLINE OF STUD AT INTERIOR WALLS AND TO CENTERLINE OF OPENINGS.

2. STRUCTURAL FRAMINGS SHALL BE DOUGLAS FIR (DF) OF THE GRADES INDICATED OR BETTER (WWPA GRADING RULES) WITH 19% MAXIMUM MOISTURE CONTENT:
   BEAMS AND STRINGERS:
   - 4x NO. 1
   - 6x NO. 1
   - JOISTS, RAFTERS & LEDGERS, 2x AND 4x NO. 1
   - POSTS AND TIMBERS NO. 1
   - STUDS, SILL & PLATES: 2x4 STUD
   - 2x6 NO. 1
   - 2x8 AND LARGER NO. 1
   - MISC. FRAMING LUMBER NOT NOTED NO. 2

   GLU-LAMINATED BEAMS (DF):
   - SIMPLE SPAN 24F-V4
   - CONTINUOUS 24F-V8

3. SILLS ON CONCRETE SLAB ON GRADE SHALL BE APPROVED PRESSURE TREATED DF. EACH PIECE SHALL BEAR THE AWPA STAMP. CUTS AND BORED HOLES OF TREATED DF SHALL BE TREATED WITH COPPER GREEN.

4. FASTENERS FOR PRESERVATIVE-TREATED AND FIRE RETARDANT-TREATED WOOD SHALL BE OF HOT DIPPED ZINC-COATED GALVANIZED STEEL, OR STAINLESS STEEL. THE COATING WEIGHTS FOR ZINC-COATED FASTENERS SHALL BE IN ACCORDANCE WITH ASTM A153. HARDWARE SHALL BE COATED PER SIMPSON STRONG TIE 'CORROSION INFORMATION'.

5. WOOD SILLS FOR BEARING SHEATHED WALLS OR JOISTS SUPPORT BEARING ON MASONRY OR CONCRETE SHALL BE BOLTED WITH 5/8" Ø X 1'-0" BOLTS WITH 8" EMBEDMENT AT 4'-0" MAXIMUM SPACING, UNLESS OTHERWISE SHOWN, AND WITHIN 9" MAX, 5" MIN, OF END OF EACH PIECE. USE 5/8" Ø X 1'-6" BOLTS @ 6" CURBS.

6. WOOD STRUCTURAL MEMBERS SHALL NOT BE DRILLED OR NOTCHED EXCEPT AS SHOWN OR AS APPROVED BY THE ENGINEER.

7. FRAMING HARDWARE NOTED IS SIMPSON STRONG-TIE AND SHALL BE INSTALLED WITH CONNECTORS SPECIFIED FOR EACH SPECIFIC DEVICE BY THE MANUFACTURER'S CURRENT CATALOG. EQUIVALENT DEVICES APPROVED BY THE ENGINEER MAY BE SUBSTITUTED. SINKERS SHALL NOT BE USED.

8. WALL TOP PLATES SHALL HAVE JOINTS AT A STUD CENTERLINE. END JOINTS IN DOUBLE TOP PLATES SHALL BE OFFSET AT LEAST 4'-0".

9. BOLT HOLES IN WOOD AND/OR STEEL SHALL BE 1/16" LARGER THAN BOLTS. STANDARD CUT WASHERS SHALL BE PROVIDED UNDER THE HEADS AND NUTS OF ALL BOLTS BEARING ON WOOD. 3" X 3"X ¼" PLATE WASHERS SHALL BE USED UNDER ALL ANCHOR BOLTS.

10. ALL NUTS SHALL BE TIGHTENED WHEN PLACED AND RETIGHTENED PRIOR TO APPLICATION OF FINISH OR AT COMPLETION OF JOB.

11. BLOCKING 2X WIDTH OF STUD, SHALL BE PROVIDED AT FLOOR, CEILING AND ROOF LINES AND SO THAT UNBRACED LENGTH OF STUD DOES NOT EXCEED 10'-0".

12. ALL JOISTS AND RAFTERS SHALL HAVE FULL DEPTH SOLID BLOCKING (2X MIN) OR CONTINUOUS RIM JOIST AT ALL SUPPORTS.

13. EXCEPT WHERE NOTED OTHERWISE, STUD WALLS SHALL BE 2X6 @ 16" OC MAXIMUM SPACING.

14. LAG BOLTS AND WOOD SCREWS SHALL BE SCREWED, NOT DRIVEN, INTO PLACE. LEAD HOLES SHALL BE PREBORED PER NDS CHAPTER 12.

15. GLU-LAMINATED BEAMS SHALL BE FABRICATED WITH CAMBER AS SHOWN ON PLANS AND SHALL BE INSTALLED CROWN SIDE UP. CONTRACTOR SHALL PROVIDE THE ENGINEER WITH AITC CERTIFICATES FOR ALL GLU-LAMINATED BEAMS PRIOR TO INSTALLATION.

30% SUBMITTAL

NOT FOR CONSTRUCTION

NO.	REVISION	REV BY	CKD BY	DATE
-	-	-	-	-

SURPRISE ARIZONA

CITY OF SURPRISE
SPA 1 WRF CAPACITY
EXP FACILITY
RERATING

WATERWORKS ENGINEERS

STRUCTURAL

GENERAL NOTES 1

DESIGN DB | DRAWN MC | CHECKED JHM

DATE AUGUST 2022

PROJECT NUMBER 20-018

DRAWING NUMBER S-00-001

SHEET NO. 15 OF

REUSE OF DOCUMENTS: THIS DOCUMENT, AND THE IDEAS AND DESIGN INCORPORATED HEREIN, AS AN INSTRUMENT OF PROFESSIONAL SEVICE, IS THE PROPERTY OF WATER WORKS ENGINEERS, LLC. AND IS NOT TO BE USED, IN WHOLE OR PART, FOR ANY OTHER PROJECT WITHOUT THE WRITTEN AUTHORIZATION OE WATER WORKS ENGINEERS,LLC.

FILE PATH: BIM 360://20-018 SPA 1 WRF Capacity Exp Facility Rerating/2018D-M-Blower Building.rvt

DATE AND TIME: 7/22/2022 11:08:27 AM

16. CONTRACTOR SHALL FURNISH SHOP DRAWINGS OF ALL GLU-LAMINATED BEAMS FOR ENGINEERS REVIEW PRIOR TO FABRICATION.

WOOD NAILING:

1. NAILS SHALL BE "COMMON" WIRE NAILS, UNLESS OTHERWISE SPECIFIED. NAILS SHALL BE PREDRILLED, IF REQUIRED, TO AVOID SPLITTING THE MEMBER. NAILS SHALL BE THE FOLLOWING SIZES:
   - 10d COMMON = 0.148" Ø x 3"
   - 16d COMMON = 0.162" Ø x 3 1/2"
2. THE EDGE DISTANCE FOR NAILING IN MEMBERS WHERE PLYWOOD PANELS ARE TO ABUT SHALL BE 3/4" FOR 3X OR WIDER AND 3/8" FOR 2X NOMINAL MEMBERS.
3. FASTENERS FOR PRESERVATIVE-TREATED AND FIRE RETARDANT-TREATED WOOD SHALL BE OF HOT DIPPED ZINC-COATING. FASTENERS SHALL BE IN ACCORDANCE WITH ASTM A153.
4. NAILS IN STRUCTURAL WOOD PANELS SHALL BE DRIVEN SO THAT THEIR HEADS ARE FLUSH WITH THE PANEL SURFACE.
5. USE OF MACHINE NAILING IS SUBJECT TO A SATISFACTORY JOB SITE DEMONSTRATION AND ENGINEER'S APPROVAL. APPROVAL IS SUBJECT TO SATISFACTORY PERFORMANCE. IF NAIL HEADS PENETRATE THE FACE PLY MORE THAN WOULD BE NORMAL FOR A HAND HAMMER, OR IF MINIMUM ALLOWABLE EDGE DISTANCES ARE NOT MAINTAINED, THE PERFORMANCE WILL BE DEEMED UNSATISFACTORY.
6. SHEATHING PANELS SHALL BUTT AT CENTERLINE OF A SINGLE SUPPORTING MEMBER WITH EDGE NAILING FROM EACH PANEL INTO THAT MEMBER.
7. ALL TOP PLATES, SILLS AND STUDS SHALL HAVE EDGE NAILING AT THE CENTERLINE OF MEMBER.
8. PIECES OF WALL, ROOF OR FLOOR SHEATHING SHALL BE NO LESS THAN 12" IN LEAST DIMENSION. PIECES LESS THAN 24" SHALL HAVE 3X4 FLAT MIN BLKG @ UNSUPPORTED PANEL EDGES.
9. PLYWOOD FLOOR SHEATHING NOT NOTED AS T&G SHALL HAVE 2X BLOCKING AT UNSUPPORTED PANEL EDGES UNLESS FLOOR IS TO HAVE 1/4" MINIMUM THICKNESS UNDERLAYMENT.
10. UNLESS NOTED ON DRAWINGS, FASTENING SHALL BE AS SPECIFIED BELOW:

JOISTS OR RAFTERS TO SIDES OF STUDS:	
EIGHT (8) INCH JOISTS OR LESS	3-16d
FOR EACH ADDITIONAL FOUR (4) INCHES IN DEPTH	1-16d
JOISTS OR RAFTERS AT ALL BEARINGS:	
TOE NAIL EACH SIDE	3-10d
CEILING JOISTS:	
LAPS OVER PARTITIONS FACE NAIL	3-16d
TO PARALLEL RAFTERS FACE NAIL	3-16d
BLOCKING BETWEEN JOISTS, RAFTERS OR TRUSSES:	
TO JOIST, RAFTER OR TRUSS EACH END	2-16d EN OR 4-10d TN
BLOCKING BETWEEN STUDS:	
EACH SIDE TOE NAILS	2-10d
OR END NAILS	2-16d
BRIDGING TO JOIST, TOE NAIL END EACH	2-8d
SILL PLATE TO JOIST OR BLOCKING, FACE NAIL	16d @16" OC
TOP PLATE TO STUD, END NAIL	2-16d
STUD TO SILL PLATE	3-16d EN or 4-8d TN
DOUBLED STUDS OR JOISTS, FACE NAIL	16d @12" OC
DOUBLE TOP PLATES, FACE NAIL	16d @16" OC
BUILT UP CORNER STUDS	16d @12" OC

ADHESIVE ANCHORS:

1. THE ADHESIVE ANCHOR SYSTEM USED FOR POST-INSTALLED ANCHORAGE TO CONCRETE SHALL CONFORM TO THE REQUIREMENTS OF THE MOST RECENTLY PUBLISHED ACI 355.4, ACCEPTANCE CRITERIA FOR QUALIFICATION OF POST-INSTALLED ADHESIVE ANCHORS IN CONCRETE AND COMMENTARY. THE ANCHOR SYSTEM SHALL BE ONE OF THE FOLLOWING:
   - HILTI HIT-HY 200.
   - SIMPSON SET-3G.
2. ADHESIVE ANCHORS SHALL BE SUPPLIED AS AN ENTIRE SYSTEM INCLUDING, BUT NOT LIMITED TO, THE NEW ADHESIVE CARTRIDGE, A CLEAN MIXING NOZZLE, EXTENSION TUBE, A DISPENSING GUN, AND ALL MANUFACTURER RECOMMENDED SUPPLIES FOR PROPERLY CLEANING THE DRILLED HOLE.
3. ALL-THREAD ROD TO BE USED IN ADHESIVE ANCHOR ASSEMBLIES SHALL CONFORM TO ASTM A36, A193 (GR B7), A307, OR F1554. STAINLESS STEEL ANCHOR RODS SHALL BE TYPE 316. NUTS, WASHERS, AND OTHER HARDWARE USED WITH AN ALL-THREAD SHALL HAVE A MATERIAL OR ALLOY DESIGNATION THAT MATCHES THE ALL-THREAD MATERIAL / ALLOY.
4. REINFORCING BARS SHALL BE ASTM A615 OR A706.
5. CONCRETE SHALL HAVE A MINIMUM COMPRESSIVE STRENGTH OF 2,500 PSI AT THE TIME OF ADHESIVE ANCHOR INSTALLATION. CONCRETE SHALL HAVE A MINIMUM AGE OF 21 DAYS AT THE TIME OF ADHESIVE ANCHOR INSTALLATION.
6. CONCRETE TEMPERATURE AT THE TIME OF ADHESIVE ANCHOR INSTALLATION SHALL BE WITHIN THE ALLOWABLE TEMPERATURE RANGE SPECIFIED IN THE MANUFACTURER'S PRINTED INSTALLATION INSTRUCTIONS AND ICC REPORT.
7. EMBEDMENT DEPTH AND ANCHOR PROJECTION FROM THE CONCRETE SURFACE SHALL BE AS SHOWN ON THE DRAWINGS FOR THE PARTICULAR ANCHOR OR GROUP OF ANCHORS BEING INSTALLED. ABSENT ANY INFORMATION, THE MINIMUM EMBEDMENT DEPTH SHALL BE 12d WHERE "d" IS THE ANCHOR DIAMETER.
8. ADHESIVE ANCHORS SHALL BE INSTALLED BY QUALIFIED PERSONNEL TRAINED TO INSTALL ADHESIVE ANCHORS IN ACCORDANCE WITH THE SPECIFICATIONS. POST-INSTALLED ADHESIVE ANCHORS SHALL BE INSTALLED IN ACCORDANCE WITH THE MANUFACTURER'S PRINTED INSTALLATION INSTRUCTIONS.
9. INSTALLATION OF ADHESIVE ANCHORS HORIZONTALLY OR UPWARDLY INCLINED TO SUPPORT SUSTAINED TENSION LOADS SHALL BE PERFORMED BY PERSONNEL CERTIFIED BY ACI/CRSI ADHESIVE ANCHOR INSTALLER CERTIFICATION PROGRAM. THESE ANCHORS ARE DESIGNATED WITH A (CERT) AFTER THE ANCHOR CALL-OUT.
10. THE INSTALLER'S QUALIFICATIONS SHALL BE SUBMITTED AND APPROVED IN ACCORDANCE WITH SECTION 05051 OF THE SPECIFICATIONS.
11. WHEN DRILLING HOLES IN EXISTING CONCRETE, USE CARE AND CAUTION TO AVOID CUTTING OR DAMAGING THE EXISTING REINFORCING BARS. MAINTAIN A REASONABLE CLEARANCE BETWEEN REINFORCEMENT AND THE DRILLED-IN ANCHOR.
12. SPECIAL INSPECTION IS REQUIRED PER IBC SECTION 1705 AND THE REQUIREMENTS OF THE ICC REPORT. THE SPECIAL INSPECTOR MUST BE PERIODICALLY ON THE JOBSITE DURING ANCHOR INSTALLATION TO VERIFY ANCHOR TYPE, ANCHOR DIMENSIONS, HOLE CLEANLINESS, EMBEDMENT DEPTH, CONCRETE TYPE, DRILL BIT DIAMETER, HOLE DEPTH, EDGE DISTANCE, ANCHOR SPACING, AND CONCRETE THICKNESS.
13. ADHESIVE ANCHORS INSTALLED IN HORIZONTAL OR UPWARDLY INCLINED ORIENTATIONS TO RESIST SUSTAINED TENSION LOADS SHALL BE CONTINUOUSLY INSPECTED DURING INSTALLATION BY AN INSPECTOR SPECIALLY APPROVED FOR THAT PURPOSE BY THE BUILDING OFFICIAL.

DEFERRED SUBMITTALS:

1. PER 2018 IBC 107.3.4.1 THE FOLLOWING ITEMS, DRAWINGS AND CALCULATIONS, SHALL BE STAMPED BY AN ENGINEER REGISTERED IN THE STATE OF THE PROJECT. ITEMS SHALL BE SUBMITTED TO THE REGISTERED DESIGN PROFESSIONAL IN RESPONSIBLE CHARGE FOR REVIEW AND APPROVAL. FOLLOWING APPROVAL BY THE REGISTERED DESIGN PROFESSIONAL IN RESPONSIBLE CHARGE, THE CONTRACTOR SHALL SUBMIT THE ITEMS TO THE BUILDING OFFICIAL WITH A NOTATION INDICATING THAT THE DEFERRED SUBMITTAL DOCUMENTS HAVE BEEN REVIEWED AND FOUND TO BE IN GENERAL CONFORMANCE TO THE DESIGN OF THE STRUCTURE. THE CONTRACTOR SHALL NOT START FABRICATION OR ERECTION PRIOR TO REVIEW AND APPROVAL BY THE BUILDING OFFICIAL. THE CONTRACTOR SHALL INCLUDE IN HIS BID ALL TIME AND EFFORT REQUIRED TO OBTAIN A BUILDING OFFICIAL REVIEW/PERMIT FOR THE FOLLOWING PREFABRICATED STRUCTURAL COMPONENTS:
   - WOOD TRUSSES
   - MASONRY CONSTRUCTION

STATEMENT OF SPECIAL INSPECTIONS:

1. SPECIAL INSPECTION IS IN ADDITION TO THE INSPECTIONS REQUIRED BY SECTION 110 OF THE IBC. THE OWNER OR CONTRACTOR SHALL EMPLOY A SPECIAL INSPECTOR DURING CONSTRUCTION ON THE TYPES OF WORK INDICATED BELOW. REFERENCE THE PROJECT SPECIFICATIONS FOR DETERMINATION OF WHO IS RESPONSIBLE TO PAY FOR SPECIAL INSPECTIONS SERVICES AND ASSOCIATED TESTS.
2. SPECIAL INSPECTIONS SHALL BE PERFORMED BY AN INDEPENDENT QUALIFIED PERSON WHO IS ACCEPTABLE TO THE ENGINEER AND BUILDING DEPARTMENT. THE INSPECTORS FOR EACH SYSTEM AND MATERIAL WILL BE ICC CERTIFIED OR OTHERWISE APPROVED BY THE BUILDING OFFICIAL. THE SPECIAL INSPECTOR SHALL OBSERVE THE INDICATED WORK FOR COMPLIANCE WITH THE APPROVED CONTRACT DOCUMENTS AND SUBMIT RECORDS OF INSPECTION.
3. INSPECTION RECORDS AND TESTING REPORTS SHALL BE SUBMITTED TO THE ENGINEER, OWNER, AND BUILDING OFFICIAL WITHIN ONE WEEK OF INSPECTION OR WITHIN ONE WEEK OF TEST COMPLETION.
4. AT THE CONCLUSION OF CONSTRUCTION, A FINAL REPORT DOCUMENTING REQUIRED SPECIAL INSPECTIONS AND CORRECTION OF DISCREPANCIES SHALL BE SUBMITTED.
5. PERIODIC SPECIAL INSPECTION IS DEFINED AS SPECIAL INSPECTION BY THE SPECIAL INSPECTOR WHO IS INTERMITTENTLY PRESENT WHERE THE WORK TO BE INSPECTED HAS BEEN OR IS BEING PERFORMED.
6. SPECIAL INSPECTION IS REQUIRED PER CHAPTER 17 OF THE IBC FOR THE FOLLOWING ITEMS:
   - SOILS (BY CONTRACTOR PER SPECIFICATION SECTION 02300)
   - CONCRETE CONSTRUCTION

REQUIRED VERIFICATION AND SPECIAL INSPECTION OF SOILS

	VERIFICATION AND INSPECTION	CONTINUOUS	PERIODIC	REFERENCED STANDARD	2018 IBC REFERENCE
1.	VERIFY MATERIALS BELOW SHALLOW FOUNDATIONS ARE ADEQUATE TO ACHIEVE THE DESIGN BEARING CAPACITY	-	X	SECTION 02300 - EARTHWORK	1705.6, 1804
2.	VERIFY EXCAVATIONS ARE EXTENDED TO PROPER DEPTH AND HAVE REACHED PROPER MATERIAL	-	X	SECTION 02300 - EARTHWORK	1705.6
3.	PERFORM CLASSIFICATION AND TESTING OF COMPACTED FILL MATERIALS	-	X	SECTION 02300 - EARTHWORK	1705.6
4.	VERIFY USE OF PROPER MATERIALS, DENSITIES AND LIFT THICKNESSES DURING PLACEMENT AND COMPACTION OF COMPACTED FILL	X	-	SECTION 02300 - EARTHWORK	1705.6
5.	PRIOR TO PLACEMENT OF COMPACTED FILL, INSPECT SUBGRADE AND VERIFY THAT SITE HAS BEEN PREPARED PROPERLY	-	X	SECTION 02300 - EARTHWORK	1705.6

REQUIRED SPECIAL INSPECTION OF CONCRETE CONSTRUCTION

	VERIFICATION AND INSPECTION	CONTINUOUS	PERIODIC	REFERENCED STANDARD	2018 IBC REFERENCE
1.	INSPECT REINFORCEMENT, INCLUDING PRESTRESSING TENDIONS, AND VERIFY PLACEMENT	-	X	ACI 318: Ch. 20, 25.2, 25.3, 26.6.1-26.6.3	1908.4
2.a.	VERIFY WELDABILITY OF REINFORCING BARS OTHER THAN ASTM A706	-	X	AWS D1.4, ACI 318: 26.6.4	-
2.b.	INSPECT SINGLE-PASS FILLET WELDS, MAXIMUM 5/16"	-	X	AWS D1.4, ACI 318: 26.6.4	-
2.c.	INSPECT ALL OTHER REINFORCING BAR WELDS	X		AWS D1.4, ACI 318: 26.6.4	-
3.	INSPECTION OF ANCHORS CAST IN CONCRETE	-	X	ACI 318: 17.8.2	-
4.a.	INSPECTION OF ADHESIVE ANCHORS INSTALLED IN HORIZONTALLY OR UPWARDLY INCLINED ORIENTATIONS TO RESIST SUSTAINED TENSION LOADS	X	-	ACI 318: 17.8.2.4	-
4.b.	INSPECTION OF MECHANICAL ANCHORS AND ADHESIVE ANCHORS NOT DEFINED IN 4.a.	-	X	ACI 318: 17.8.2	-
5.	VERIFYING USE OF REQUIRED DESIGN MIX	-	X	ACI 318: Ch. 19, 26.4.3, 26.4.4	1904.1, 1904.2, 1908.2, 1908.3
6.	PRIOR TO CONCRETE PLACEMENT, FABRICATE SPECIMENS FOR STRENGTH TESTS, PERFORM SLUMP AND AIR CONTENT TESTS, AND DETERMINE THE TEMPERATURE OF THE CONCRETE.	X	-	ASTM: C172, C31 ACI318: 26.5, 26.12	1908.10
7.	INSPECT CONCRETE AND SHOTCRETE PLACEMENT FOR PROPER APPLICATION TECHNIQUES	X	-	ACI 318: 26.5	1908.6, 1908.7, 1908.8
8.	VERIFY MAINTENANCE OF SPECIFIED CURING TEMPERATURE AND TECHNIQUES	-	X	ACI 318: 26.5.3-26.5.5	1908.9
9.	INSPECT PRESTRESSED CONCRETE FOR:	X	-	ACI 318: 26.10	-

30% SUBMITTAL

NOT FOR CONSTRUCTION

NO.	REVISION	REV BY	CKD BY	DATE
-	-	-	-	-

SURPRISE ARIZONA

CITY OF SURPRISE
SPA 1 WRF CAPACITY
EXP FACILITY
RERATING

WATERWORKS ENGINEERS

STRUCTURAL

GENERAL NOTES 2

CHECKED JHM

DRAWN MC

DESIGN DB

DATE: AUGUST 2022

PROJECT NUMBER 20-018

DRAWING NUMBER S-00-002

SHEET NO. 16 OF

REUSE OF DOCUMENTS: THIS DOCUMENT, AND THE IDEAS AND DESIGN INCORPORATED HEREIN, AS AN INSTRUMENT OF PROFESSIONAL SEVICE, IS THE PROPERTY OF WATER WORKS ENGINEERS, LLC. AND IS NOT TO BE USED, IN WHOLE OR PART, FOR ANY OTHER PROJECT WITHOUT THE WRITTEN AUTHORIZATION OE WATER WORKS ENGINEERS,LLC.

	A. APPLICATION OF PRESTRESSING FORCES B. GROUTING OF BONDED PRESTRESSING TENDONS				
10.	INSPECT ERECTION OF PRECAST CONCRETE MEMBERS	-	X	ACI 318: 26.9	-
11.	VERIFY IN-SITU CONCRETE STRENGTH, PRIOR TO STRESSING OF TENDONS IN POST-TENSIONED CONCRETE AND PRIOR TO REMOVAL OF SHORES AND FORMS FROM BEAMS AND STRUCTURAL SLABS	-	X	ACI 318: 26.11.2	-
12.	INSPECTION FORMWORK FOR SHAPE, LOCATION AND DIMENSIONS OF THE CONCRETE MEMBER BEING FORMED	-	X	ACI 318: 26.11.1.2(b)	-

REQUIRED VERIFICATION FOR MASONRY CONSTRUCTION			
MINIMUM VERIFICATION	REQUIRED FOR QUALITY ASSURANCE (a) & (b)		REFERENCE FOR CRITERIA
	LEVEL 2	LEVEL 3	TMS 602
PRIOR TO CONSTRUCTION, VERIFICATION OF COMPLIANCE OF SUBMITTALS	R	R	ART. 1.5
PRIOR TO CONSTRUCTION, VERIFICATION OF F'_m	R	R	ART 1.4 B
DURING CONSTRUCTION, VERIFICATION OF SLUMP FLOW AND VISUAL STABILITY INDEX (VSI) WHEN SELF-CONSOLIDATING GROUT IS DELIVERED TO THE PROJECT SITE	R	R	ART. 1.5 & 1.6.3
DURING CONSTRUCTION, VERIFICATION OF F'_m FOR EVERY 5,000 SQ. FT	NR	R	ART 1.4 B
DURING CONSTRUCTION, VERIFICATION OF PROPORTIONS OF MATERIALS AS DELIVERED TO THE PROJECT SITE FOR PREMIXED OR PREBLENDED MORTAR AND GROUT OTHER THAN SELF-CONSOLIDATING GROUT	NR	R	ART 1.4 B

(a) R = REQUIRED, NR = NOT REQUIRED
(b) LEVEL 2 IS REQUIRED FOR RISK CATEGORY II & III. LEVEL 3 IS REQUIRED FOR RISK CATEGORY IV.

REQUIRED SPECIAL INSPECTION FOR MASONRY CONSTRUCTION				
INSPECTION TASK	FREQUENCY (a) & (b)		REFERENCE FOR CRITERIA	
	Level 2	Level 3	TMS 402	TMS 602
1. AS MASONRY CONSTRUCTION BEGINS, VERIFY THAT THE FOLLOWING ARE IN COMPLIANCE:				
a. PROPORTIONS OF SITE-PREPARED MORTAR	P	P		Art. 2.1, 2.6 A, & 2.6 C
b. GRADE, TYPE AND SIZE OF REINFORCEMENT, CONNECTORS, AND ANCHOR BOLTS	P	P		Art 3.4 & 3.6 A
c. SAMPLE PANEL CONSTRUCTION	P	C		Art. 1.6 D
2. PRIOR TO GROUTING, VERIFY THAT THE FOLLOWING ARE IN COMPLIANCE:				
a. GROUT SPACE	P	C		Art. 3.2 D & 3.2 F
b. PLACEMENT OF REINFORCEMENT, CONNECTORS, AND ANCHOR BOLTS	P	C	Sec. 6.1, 6.3.1, 6.3.6, & 6.3.7	Art. 3.2 E & 3.4
c. PROPORTIONS OF SITE-PREPARED GROUT	P	P		Art. 2.6 B & 2.4 G.1.b
3. VERIFY COMPLIANCE OF THE FOLLOWING DURING CONSTRUCTION:				
a. MATERIALS AND PROCEDURES WITH THE APPROVED SUBMITTALS	P	P		Art. 1.5
b. PLACEMENT OF MASONRY UNITS AND MORTAR JOINT CONSTRUCTION	P	P		Art. 3.3 B
c. SIZE AND LOCATION OF STRUCTURAL MEMBERS	P	P		Art. 3.3 F
d. TYPE, SIZE, AND LOCATION OF ANCHORS, INCLUDING OTHER DETAILS OF ANCHORAGE OF MASONRY TO STRUCTURAL MEMBERS, FRAMES, OR OTHER CONSTRUCTION	P	C	Sec. 1.2.1(e), 6.2.1, & 6.3.1	
e. WELDING OF REINFORCEMENT	C	C	Sec. 6.1.6.2	
f. PREPARATION, CONSTRUCTION, AND PROTECTION OF MASONRY DURING COLD WEATHER (TEMPERATURE BELOW 40°F) OR HOT WEATHER (TEMPERATURE ABOVE 90°F)	P	P		Art. 1.8 C & 1.8 D
g. PLACEMENT OF GROUT IS IN COMPLIANCE	C	C		Art. 3.5 & 3.6 C
4. OBSERVE PREPARATION OF GROUT SPECIMENS, MORTAR SPECIMENS, AND/OR PRISMS	P	C		Art. 1.4 B.2.a.3, 1.4 B.2.b.3, 1.4 B.2.c.3,
				1.4 B.3 & 1.4 B.4

(a) P = PERIODIC, C = CONTINUOUS
(b) LEVEL 2 IS REQUIRED FOR RISK CATEGORY II & III. LEVEL 3 IS REQUIRED FOR RISK CATEGORY IV.

NO.	REVISION	REV BY	CKD BY	DATE
-	-	-	-	-

SURPRISE
ARIZONA

CITY OF SURPRISE
SPA 1 WRF CAPACITY
EXP FACILITY
RERATING

WATER WORKS ENGINEERS

STRUCTURAL

GENERAL NOTES 3

DESIGN DB | DRAWN MC | CHECKED JHM

30% SUBMITTAL

NOT FOR CONSTRUCTION

DATE
AUGUST 2022

PROJECT NUMBER
20-018

DRAWING NUMBER
S-00-003

SHEET NO. 17 OF

REUSE OF DOCUMENTS: THIS DOCUMENT, AND THE IDEAS AND DESIGN INCORPORATED HEREIN, AS AN INSTRUMENT OF PROFESSIONAL SEVICE, IS THE PROPERTY OF WATER WORKS ENGINEERS, LLC. AND IS NOT TO BE USED, IN WHOLE OR PART, FOR ANY OTHER PROJECT WITHOUT THE WRITTEN AUTHORIZATION OE WATER WORKS ENGINEERS,LLC.

FILE PATH: BIM 360://20-018 SPA 1 WRF Capacity Exp Facility Rerating/2018D-M-Blower Building.rvt

DATE AND TIME: 7/22/2022 11:08:30 AM

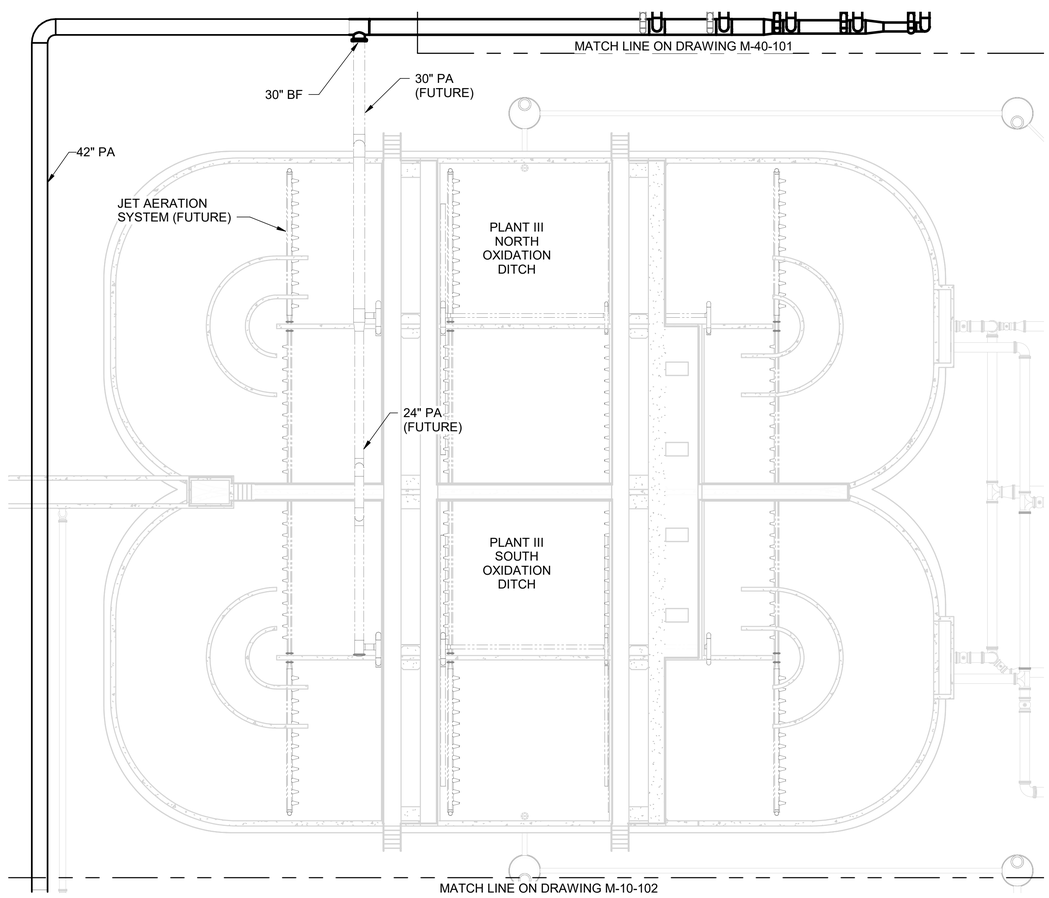

PLAN
1/16" = 1'-0"

NORTH

16 0 16 32 FEET
SCALE 1/16"=1'-0"

30% SUBMITTAL

NOT FOR CONSTRUCTION

NO.	REVISION	REV BY	CKD BY	DATE
-	-	-	-	-

SURPRISE
ARIZONA

CITY OF SURPRISE
SPA 1 WRF CAPACITY
EXP FACILITY
RERATING

WATERWORKS ENGINEERS

MECHANICAL
PLANT III OXIDATION
DITCH AERATION SYSTEM
PLAN

DESIGN DB
DRAWN MC
CHECKED JHM

DATE
AUGUST 2022
PROJECT NUMBER
20-018
DRAWING NUMBER
M-10-101
SHEET NO. 18 OF

REUSE OF DOCUMENTS: THIS DOCUMENT, AND THE IDEAS AND DESIGN INCORPORATED HEREIN, AS AN INSTRUMENT OF PROFESSIONAL SEVICE, IS THE PROPERTY OF WATER WORKS ENGINEERS, LLC. AND IS NOT TO BE USED, IN WHOLE OR PART, FOR ANY OTHER PROJECT WITHOUT THE WRITTEN AUTHORIZATION OE WATER WORKS ENGINEERS,LLC.

FILE PATH: BIM 360://20-018 SPA 1 WRF Capacity Exp Facility Rerating/2018D-M-Blower Building.rvt

DATE AND TIME: 7/22/2022 11:07:59 AM

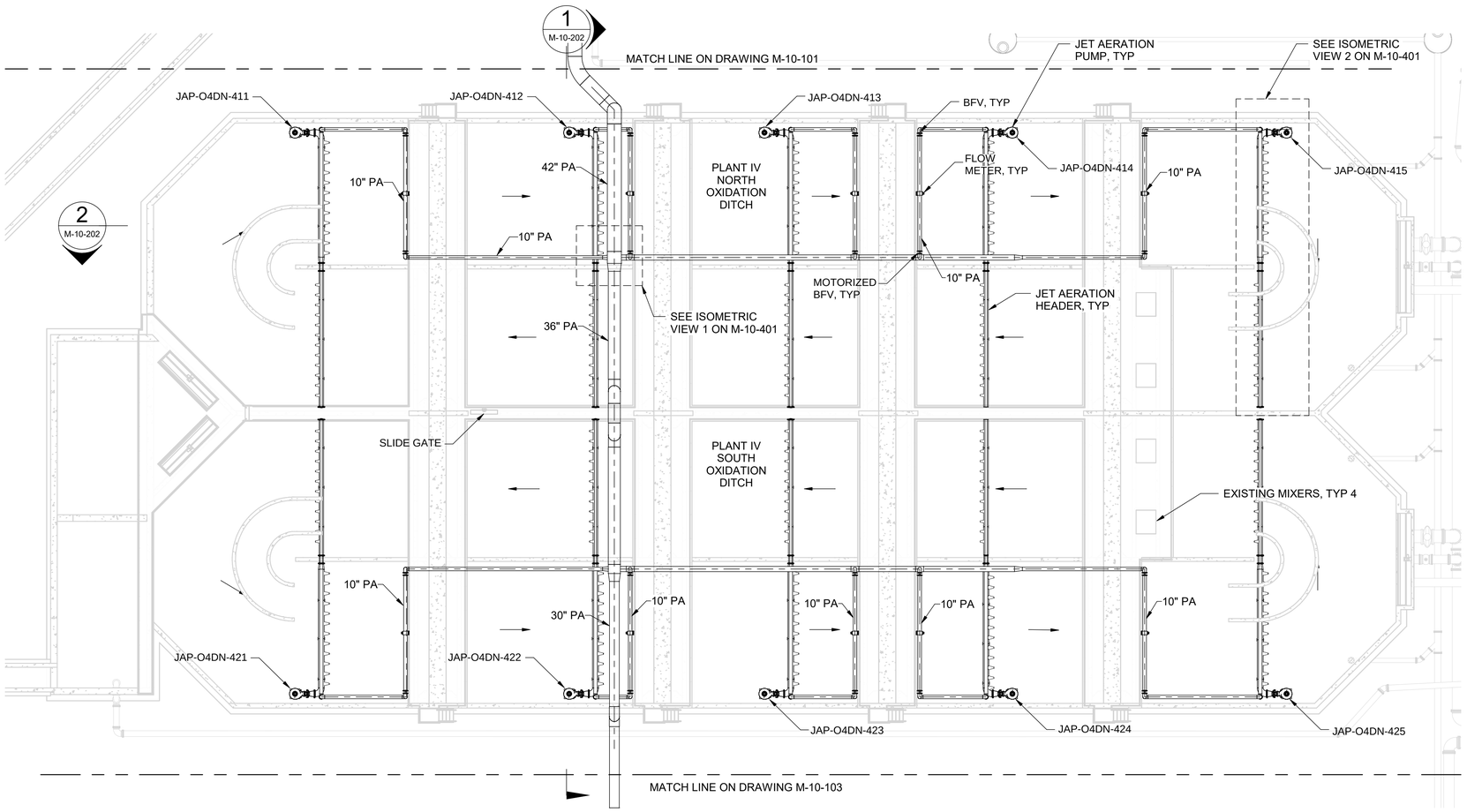

PLAN
1/16" = 1'-0"

16 0 6 32 FEET
SCALE 1/16"=1'-0"

30% SUBMITTAL

NOT FOR CONSTRUCTION

NO.	REVISION	REV BY	CKD BY	DATE
-	-	-	-	-

SURPRISE
ARIZONA

CITY OF SURPRISE
SPA 1 WRF CAPACITY
EXP FACILITY
RERATING

WATERWORKS ENGINEERS

MECHANICAL
PLANT IV OXIDATION DITCH AERATION SYSTEM PLAN

CHECKED JHM
DRAWN MC
DESIGN DB

DATE
AUGUST 2022
PROJECT NUMBER
20-018
DRAWING NUMBER
M-10-102
SHEET NO. 19 OF

REUSE OF DOCUMENTS: THIS DOCUMENT, AND THE IDEAS AND DESIGN INCORPORATED HEREIN, AS AN INSTRUMENT OF PROFESSIONAL SEVICE, IS THE PROPERTY OF WATER WORKS ENGINEERS, LLC. AND IS NOT TO BE USED, IN WHOLE OR PART, FOR ANY OTHER PROJECT WITHOUT THE WRITTEN AUTHORIZATION OE WATER WORKS ENGINEERS,LLC.

FILE PATH: BIM 360://20-018 SPA 1 WRF Capacity Exp Facility Rerating/2018D-M-Blower Building.rvt

DATE AND TIME: 8/11/2022 5:09:38 PM

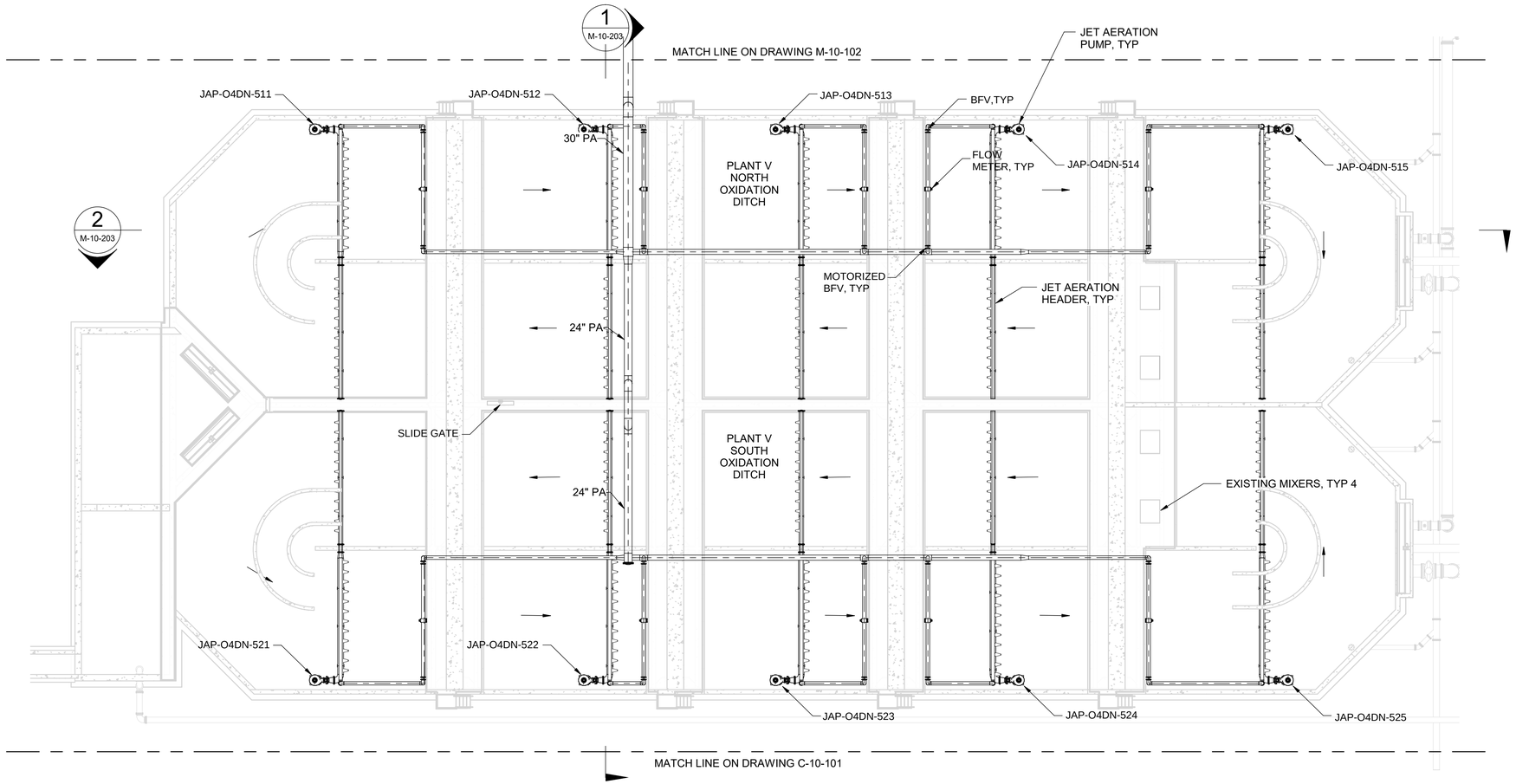

PLAN
1/16" = 1'-0"

16 0 6 32 FEET
SCALE 1/16"=1'-0"

NORTH

NO.	REVISION	REV BY	CKD BY	DATE
-	-	-	-	-

SURPRISE
ARIZONA

CITY OF SURPRISE
SPA 1 WRF CAPACITY
EXP FACILITY
RERATING

WATERWORKS ENGINEERS

30% SUBMITTAL

NOT FOR CONSTRUCTION

MECHANICAL
PLANT V OXIDATION DITCH AERATION SYSTEM PLAN

CHECKED JHM
DRAWN MC
DESIGN DB

DATE
AUGUST 2022
PROJECT NUMBER
20-018
DRAWING NUMBER
M-10-103
SHEET NO. 20 OF

REUSE OF DOCUMENTS: THIS DOCUMENT, AND THE IDEAS AND DESIGN INCORPORATED HEREIN, AS AN INSTRUMENT OF PROFESSIONAL SEVICE, IS THE PROPERTY OF WATER WORKS ENGINEERS, LLC. AND IS NOT TO BE USED, IN WHOLE OR PART, FOR ANY OTHER PROJECT WITHOUT THE WRITTEN AUTHORIZATION OE WATER WORKS ENGINEERS,LLC.

FILE PATH: BIM 360://20-018 SPA 1 WRF Capacity Exp Facility Rerating/2018D-M-Blower Building.rvt

DATE AND TIME: 7/22/2022 11:08:06 AM

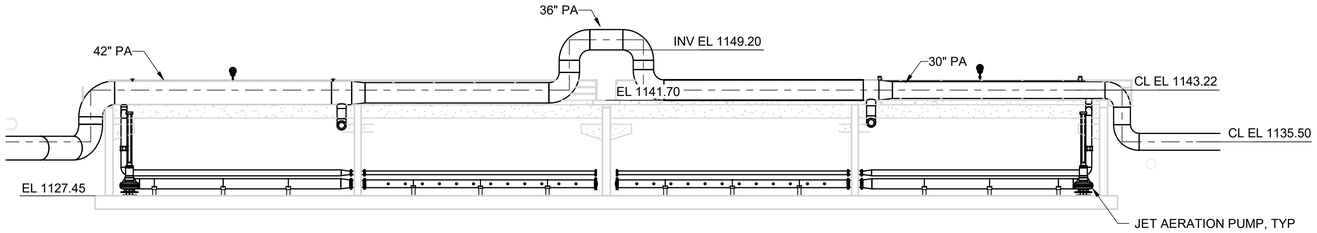

1 SECTION
M-10-102 3/32" = 1'-0"

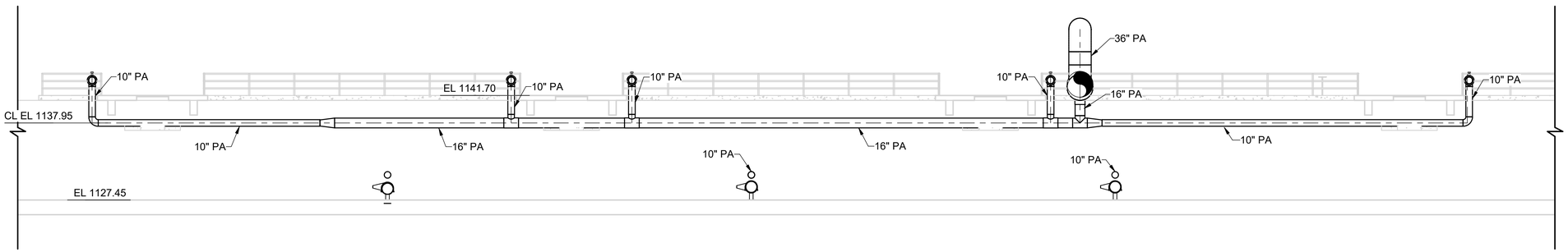

2 SECTION
M-10-102 1/8" = 1'-0"

8 0 8 16 FEET
SCALE 3/32"=1'-0"

8 0 8 16 FEET
SCALE 1/8"=1'-0"

30% SUBMITTAL

NOT FOR CONSTRUCTION

NO.	REVISION	REV BY	CKD BY	DATE
-	-	-	-	-

SURPRISE
ARIZONA

CITY OF SURPRISE
SPA 1 WRF CAPACITY
EXP FACILITY
RERATING

WATERWORKS ENGINEERS

MECHANICAL
PLANT IV OXIDATION
DITCH AERATION SYSTEM
SECTIONS

CHECKED JHM
DRAWN MC
DESIGN DB

DATE: AUGUST 2022
PROJECT NUMBER 20-018
DRAWING NUMBER M-10-202
SHEET NO. 21 OF

REUSE OF DOCUMENTS: THIS DOCUMENT, AND THE IDEAS AND DESIGN INCORPORATED HEREIN, AS AN INSTRUMENT OF PROFESSIONAL SEVICE, IS THE PROPERTY OF WATER WORKS ENGINEERS, LLC. AND IS NOT TO BE USED, IN WHOLE OR PART, FOR ANY OTHER PROJECT WITHOUT THE WRITTEN AUTHORIZATION OE WATER WORKS ENGINEERS,LLC.

FILE PATH: BIM 360://20-018 SPA 1 WRF Capacity Exp Facility Rerating/2018D-M-Blower Building.rvt

DATE AND TIME: 7/22/2022 11:08:08 AM

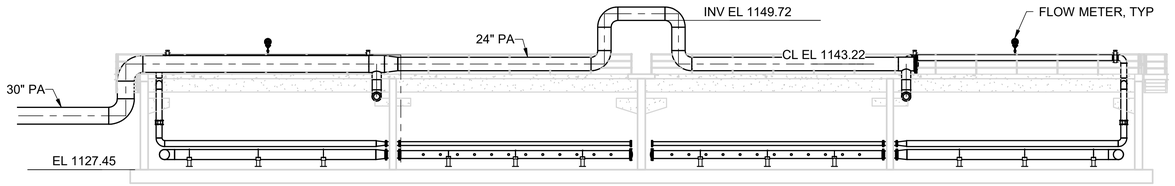

1 SECTION
M-10-103 3/32" = 1'-0"

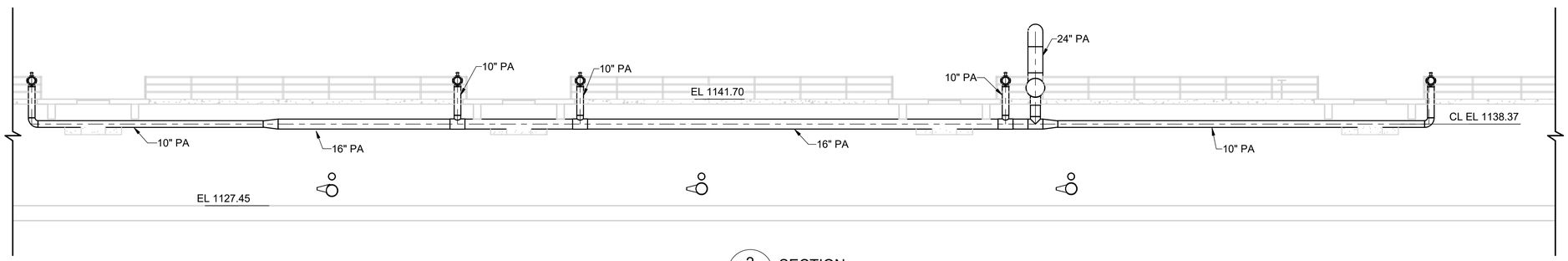

2 SECTION
M-10-103 1/8" = 1'-0"

8 0 8 16 FEET
SCALE 3/32"=1'-0"

8 0 8 16 FEET
SCALE 1/8"=1'-0"

30% SUBMITTAL

NOT FOR CONSTRUCTION

NO.	REVISION	REV BY	CKD BY	DATE
-	-	-	-	-

SURPRISE
ARIZONA

CITY OF SURPRISE
SPA 1 WRF CAPACITY
EXP FACILITY
RERATING

WATERWORKS ENGINEERS

MECHANICAL
PLANT V OXIDATION
DITCH AERATION SYSTEM
SECTIONS

CHECKED JHM
DRAWN MC
DESIGN DB

DATE: AUGUST 2022
PROJECT NUMBER 20-018
DRAWING NUMBER M-10-203
SHEET NO. 22 OF

REUSE OF DOCUMENTS: THIS DOCUMENT, AND THE IDEAS AND DESIGN INCORPORATED HEREIN, AS AN INSTRUMENT OF PROFESSIONAL SEVICE, IS THE PROPERTY OF WATER WORKS ENGINEERS, LLC. AND IS NOT TO BE USED, IN WHOLE OR PART, FOR ANY OTHER PROJECT WITHOUT THE WRITTEN AUTHORIZATION OE WATER WORKS ENGINEERS,LLC.

FILE PATH: BIM 360://20-018 SPA 1 WRF Capacity Exp Facility Rerating/2018D-M-Blower Building.rvt

DATE AND TIME: 7/22/2022 11:08:10 AM

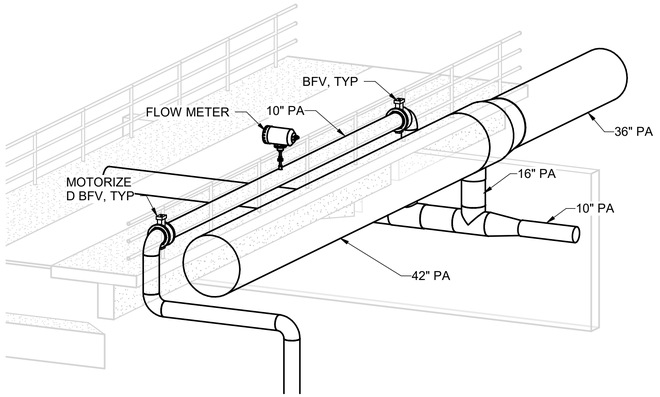

1 ISOMETRIC
NTS

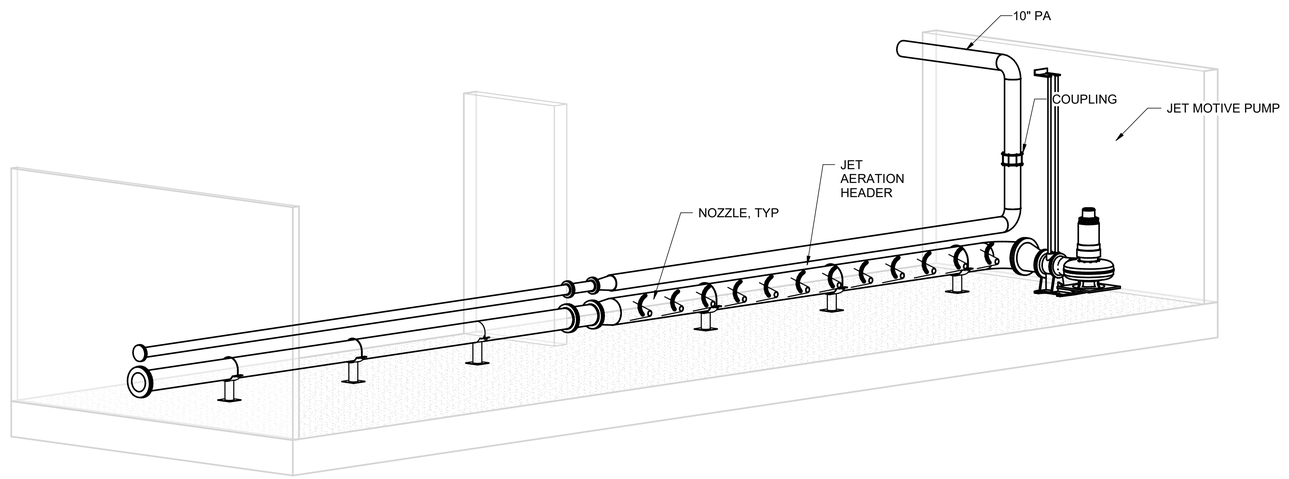

2 ISOMETRIC
NTS

NO.	REVISION	REV BY	CKD BY	DATE
-	-	-	-	-

SURPRISE
ARIZONA

CITY OF SURPRISE
SPA 1 WRF CAPACITY
EXP FACILITY
RERATING

WATERWORKS ENGINEERS

MECHANICAL
OXIDATION DITCHES
ISOMETRIC VIEWS

CHECKED JHM
DRAWN MC
DESIGN DB

30% SUBMITTAL

NOT FOR CONSTRUCTION

DATE
AUGUST 2022
PROJECT NUMBER
20-018
DRAWING NUMBER
M-10-401
SHEET NO. 23 OF

REUSE OF DOCUMENTS: THIS DOCUMENT, AND THE IDEAS AND DESIGN INCORPORATED HEREIN, AS AN INSTRUMENT OF PROFESSIONAL SEVICE, IS THE PROPERTY OF WATER WORKS ENGINEERS, LLC. AND IS NOT TO BE USED, IN WHOLE OR PART, FOR ANY OTHER PROJECT WITHOUT THE WRITTEN AUTHORIZATION OE WATER WORKS ENGINEERS,LLC.

FILE PATH: BIM 360://20-018 SPA 1 WRF Capacity Exp Facility Rerating/2018D-M-Blower Building.rvt

DATE AND TIME: 7/22/2022 11:08:12 AM

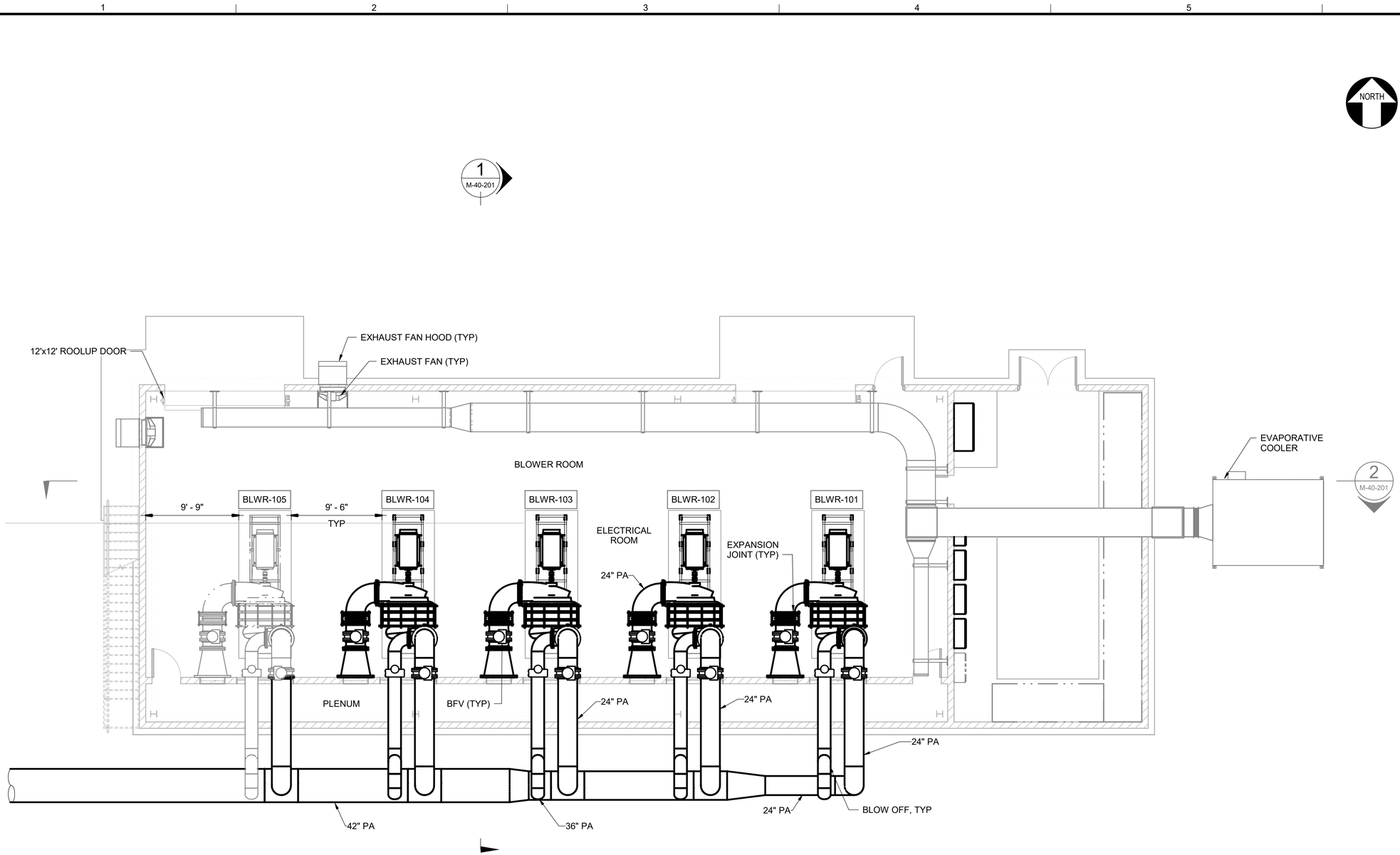

PLAN
3/16" = 1'-0"

4 0 4 8 FEET
SCALE 3/16"=1'-0"

30% SUBMITTAL

NOT FOR CONSTRUCTION

NO.	REVISION	REV BY	CKD BY	DATE
-	-	-	-	-

SURPRISE ARIZONA

CITY OF SURPRISE
SPA 1 WRF CAPACITY EXP FACILITY RERATING

WATERWORKS ENGINEERS

MECHANICAL
BLOWER BUILDING PLAN

CHECKED JHM
DRAWN MC
DESIGN DB

DATE
AUGUST 2022
PROJECT NUMBER
20-018
DRAWING NUMBER
M-40-101
SHEET NO. 24 OF

REUSE OF DOCUMENTS: THIS DOCUMENT, AND THE IDEAS AND DESIGN INCORPORATED HEREIN, AS AN INSTRUMENT OF PROFESSIONAL SEVICE, IS THE PROPERTY OF WATER WORKS ENGINEERS, LLC. AND IS NOT TO BE USED, IN WHOLE OR PART, FOR ANY OTHER PROJECT WITHOUT THE WRITTEN AUTHORIZATION OE WATER WORKS ENGINEERS,LLC.

FILE PATH: BIM 360://20-018 SPA 1 WRF Capacity Exp Facility Rerating/2018D-M-Blower Building.rvt

DATE AND TIME: 8/11/2022 4:25:37 PM

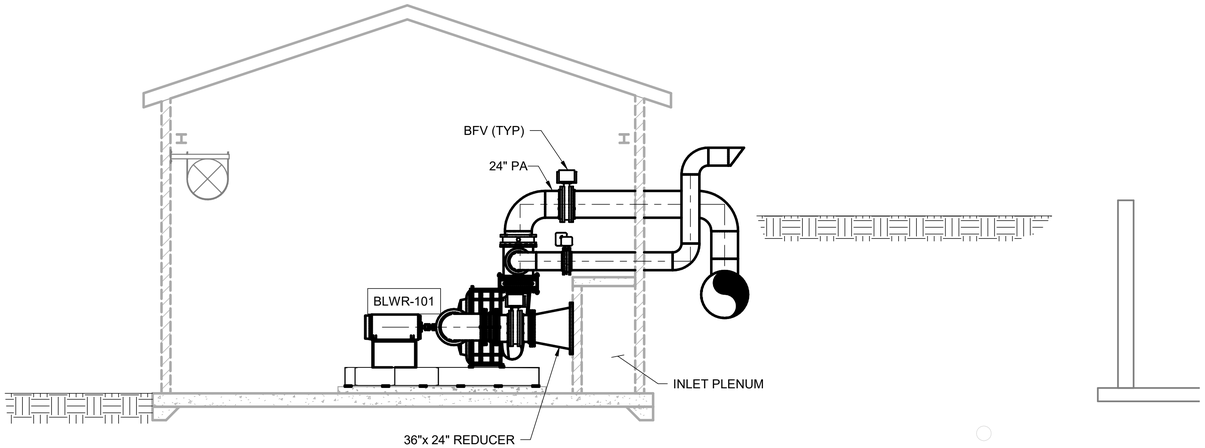

1 SECTION
M-40-101 3/16" = 1'-0"

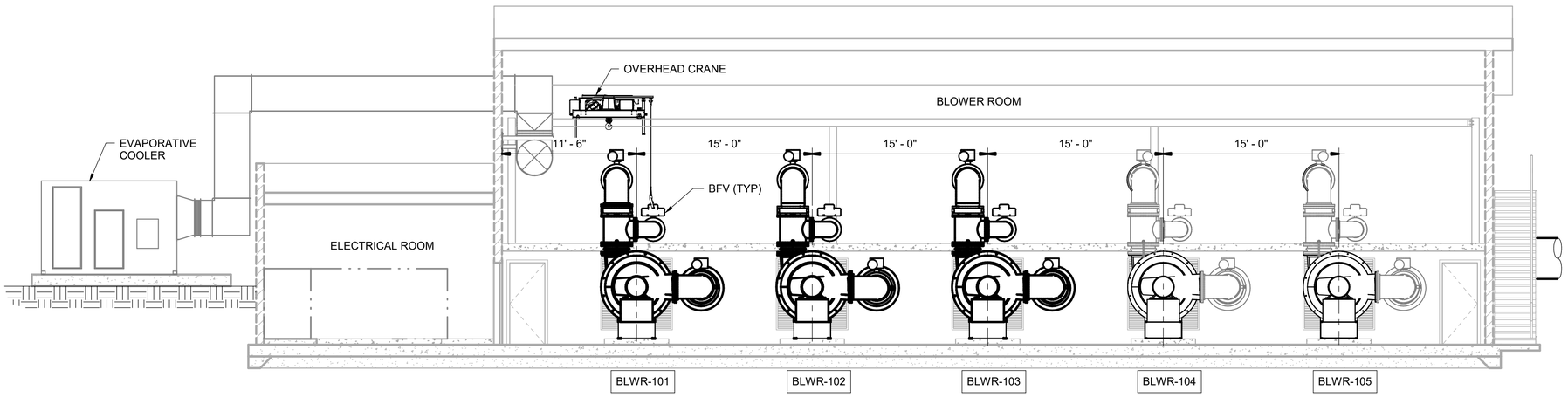

2 SECTION
H-40-101 3/16" = 1'-0"

4 0 4 8 FEET
SCALE 3/16"=1'-0"

NO.	REVISION	REV BY	CKD BY	DATE
-	-	-	-	-

SURPRISE ARIZONA

CITY OF SURPRISE
SPA 1 WRF CAPACITY EXP FACILITY RERATING

WATERWORKS ENGINEERS

MECHANICAL
BLOWER BUILDING SECTIONS

DESIGN DB | DRAWN MC | CHECKED JHM

30% SUBMITTAL

NOT FOR CONSTRUCTION

DATE: AUGUST 2022
PROJECT NUMBER: 20-018
DRAWING NUMBER: M-40-201
SHEET NO. 25 OF

REUSE OF DOCUMENTS: THIS DOCUMENT, AND THE IDEAS AND DESIGN INCORPORATED HEREIN, AS AN INSTRUMENT OF PROFESSIONAL SEVICE, IS THE PROPERTY OF WATER WORKS ENGINEERS, LLC. AND IS NOT TO BE USED, IN WHOLE OR PART, FOR ANY OTHER PROJECT WITHOUT THE WRITTEN AUTHORIZATION OE WATER WORKS ENGINEERS,LLC.

FILE PATH: BIM 360://20-018 SPA 1 WRF Capacity Exp Facility Rerating/2018D-M-Blower Building.rvt

DATE AND TIME: 7/22/2022 11:08:19 AM

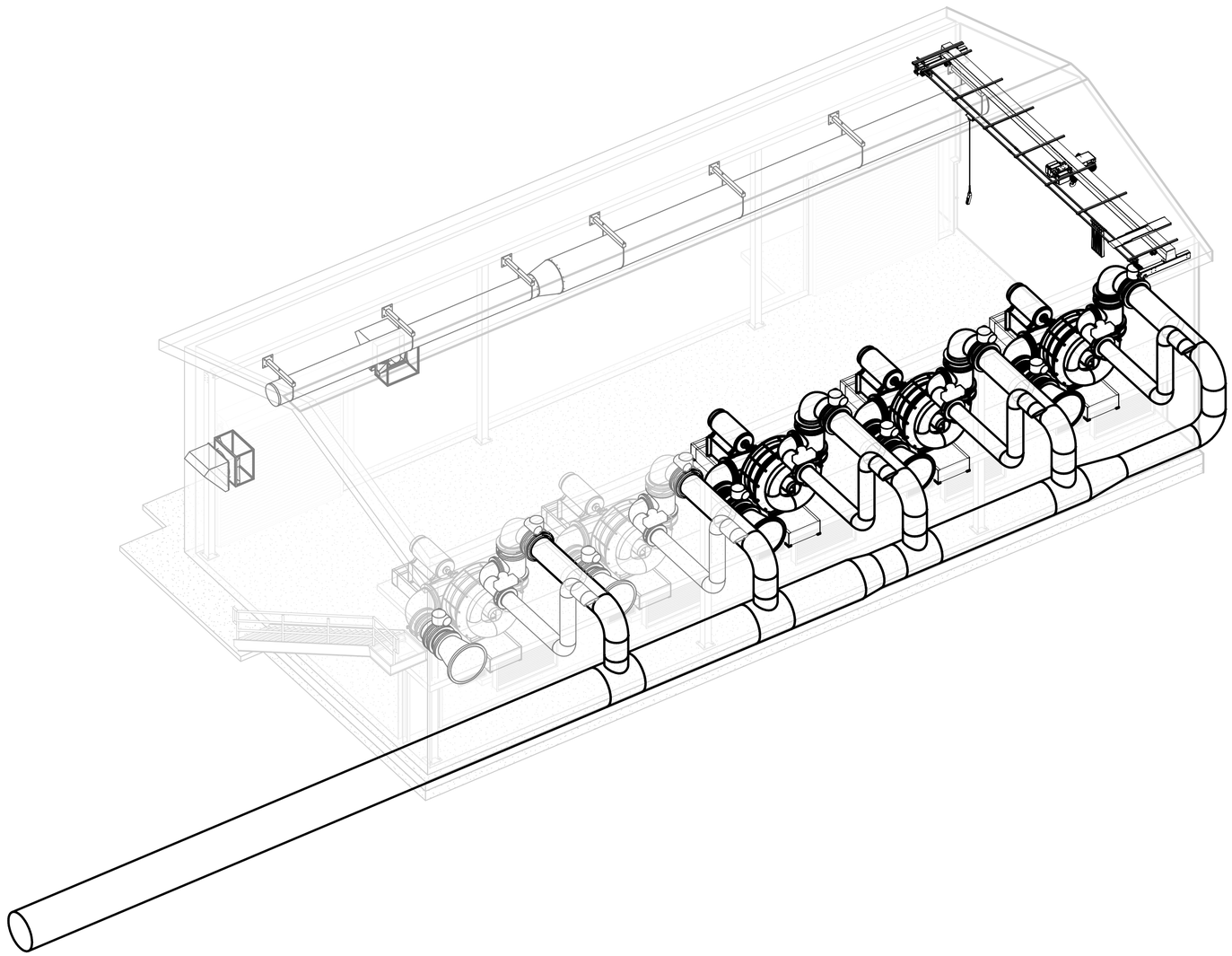

NORTH

ISOMETRIC
NTS

NO.	REVISION	REV BY	CKD BY	DATE
-	-	-	-	-

SURPRISE
ARIZONA

CITY OF SURPRISE
SPA 1 WRF CAPACITY
EXP FACILITY
RERATING

WATER WORKS ENGINEERS

MECHANICAL
BLOWER BUILDING
ISOMETRIC VIEW

CHECKED JHM
DRAWN MC
DESIGN DB

30% SUBMITTAL

NOT FOR CONSTRUCTION

DATE
AUGUST 2022
PROJECT NUMBER
20-018
DRAWING NUMBER
M-40-401
SHEET NO. 26 OF

REUSE OF DOCUMENTS: THIS DOCUMENT, AND THE IDEAS AND DESIGN INCORPORATED HEREIN, AS AN INSTRUMENT OF PROFESSIONAL SEVICE, IS THE PROPERTY OF WATER WORKS ENGINEERS, LLC. AND IS NOT TO BE USED, IN WHOLE OR PART, FOR ANY OTHER PROJECT WITHOUT THE WRITTEN AUTHORIZATION OE WATER WORKS ENGINEERS,LLC.

FILE PATH: BIM 360://20-018 SPA 1 WRF Capacity Exp Facility Rerating/2018D-M-Blower Building.rvt

DATE AND TIME: 7/22/2022 11:08:25 AM

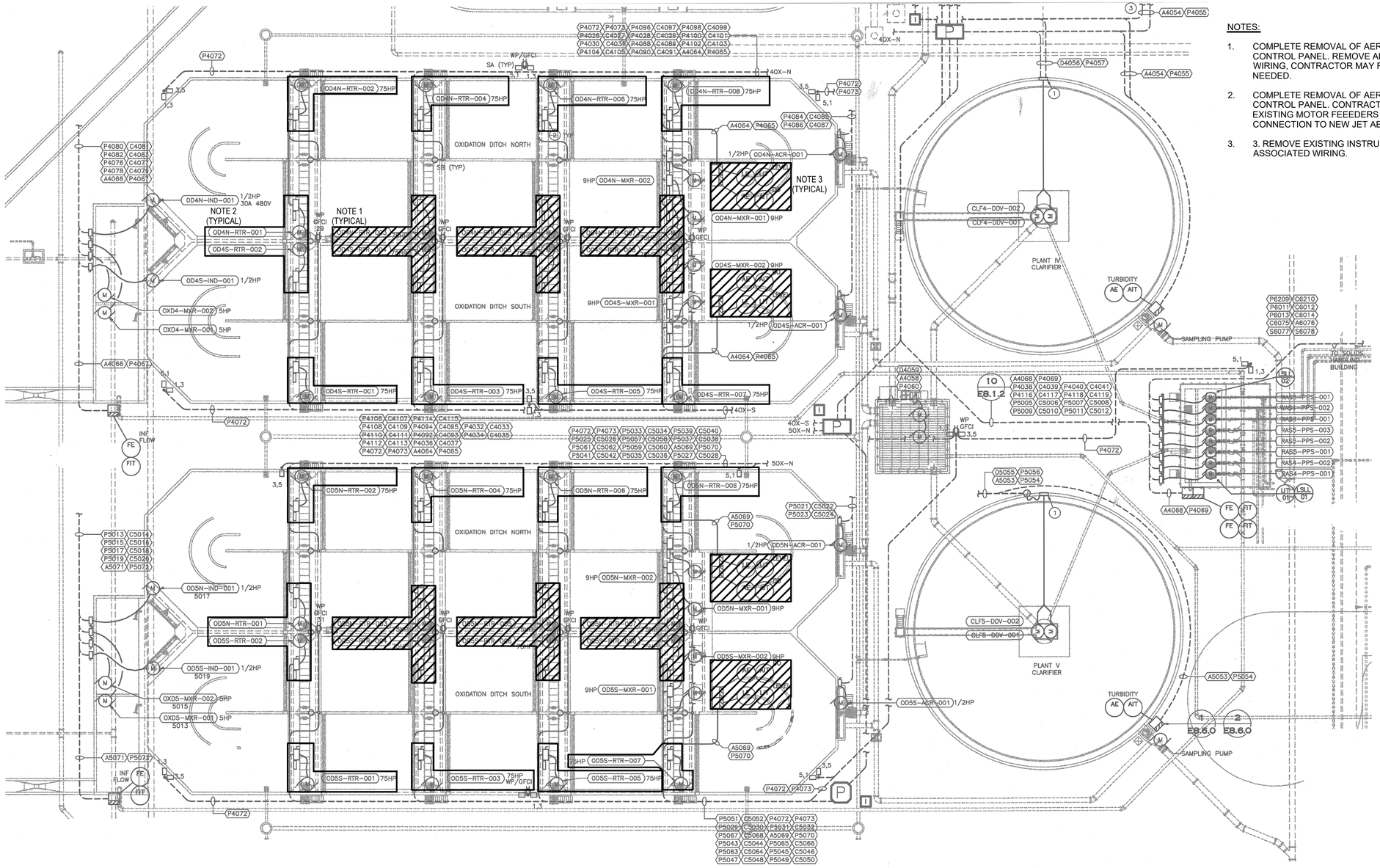

NOTES:

1. COMPLETE REMOVAL OF AERATOR MOTOR AND CONTROL PANEL. REMOVE ALL ASSOCIATED WIRING, CONTRACTOR MAY RETAIN CONDUIT IF NEEDED.
2. COMPLETE REMOVAL OF AERATOR MOTOR AND CONTROL PANEL. CONTRACTOR TO RE-USE EXISTING MOTOR FEEEDERS AND CONDUIT FOR CONNECTION TO NEW JET AERATION MOTOR.
3. 3. REMOVE EXISTING INSTRUMENTS AND ASSOCIATED WIRING.

1 ELECTRICAL POWER PLAN - CLARIFIER AND OXIDATION DITCH

SCALE: 1" = 20'-0"

NO.	REVISION	REV BY	CKD BY	DATE
-	-	-	-	-

SURPRISE ARIZONA

CITY OF SURPRISE
SPA1 WRF CAPACITY EXP
FACILITY RERATING

WATER WORKS ENGINEERS

ELECTRICAL

CLARIFIER AND OXIDATION DITCH
PLANT IV AND V
POWER PLAN

CHECKED BGY
DRAWN CAY
DESIGN ER

30% SUBMITTAL

NOT FOR CONSTRUCTION

DATE
JULY 2022

PROJECT NUMBER
20-018

DRAWING NUMBER
ED-00-100

SHEET NO. ###

REUSE OF DOCUMENTS: THIS DOCUMENT, AND THE IDEAS AND DESIGN INCORPORATED HEREIN, AS AN INSTRUMENT OF PROFESSIONAL SEVICE, IS THE PROPERTY OF WATER WORKS ENGINEERS, LLC. AND IS NOT TO BE USED, IN WHOLE OR PART, FOR ANY OTHER PROJECT WITHOUT THE WRITTEN AUTHORIZATION OE WATER WORKS ENGINEERS,LLC.

FILE PATH: File Path

DATE AND TIME: 10/11/2013 3:33:16 PM

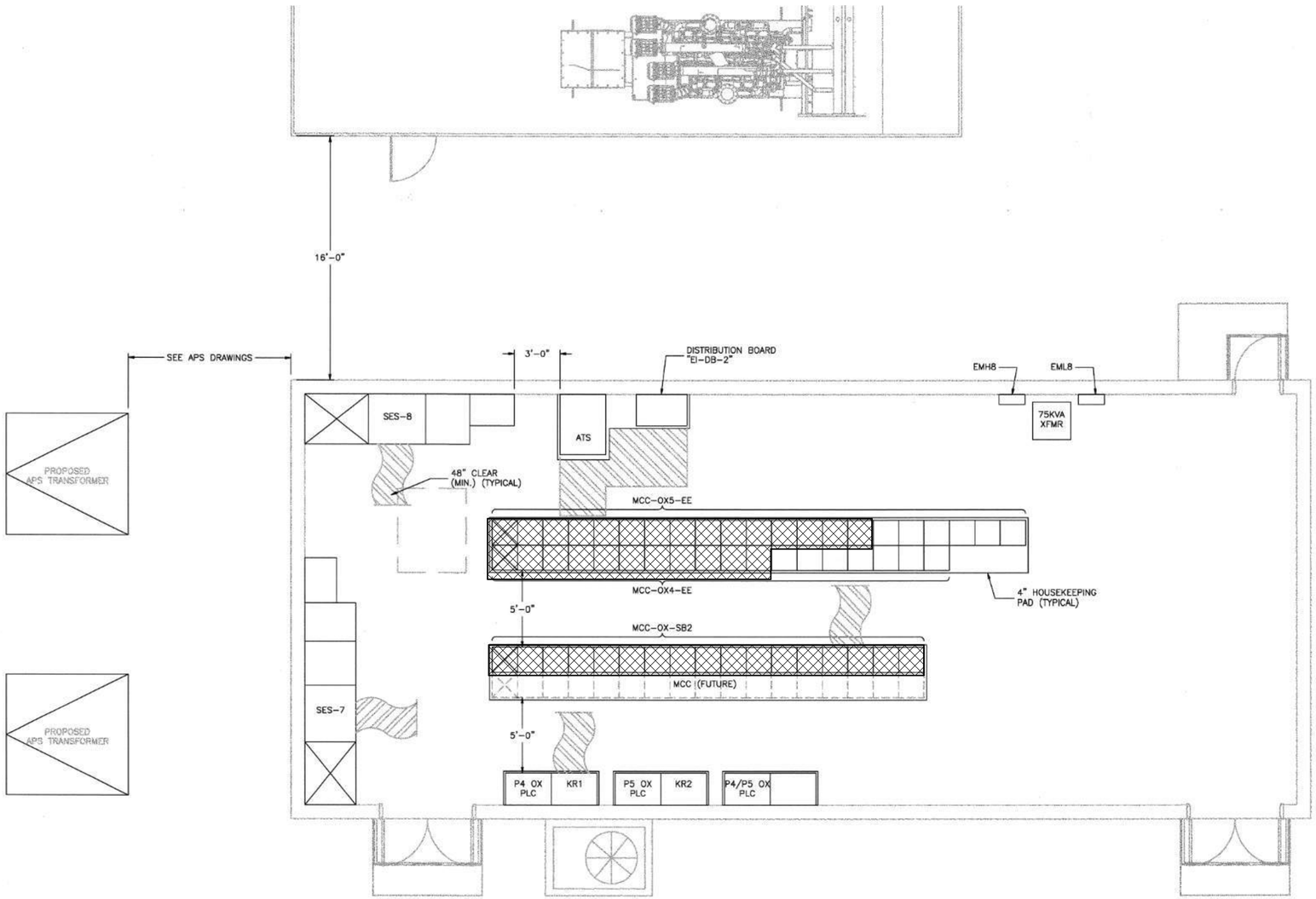

1 OXIDATION BUILDING EQUIPMENT PLAN

SCALE: 1/4" = 1'-0"

4 0 4 8 FEET

SCALE 1/4"=1'-0"

NO.	REVISION	REV BY	CKD BY	DATE
-	-	-	-	-

SURPRISE ARIZONA

CITY OF SURPRISE
SPA 1 WRF CAPACITY
EXP FACILITY
RERATING

WATER WORKS ENGINEERS

30% SUBMITTAL

NOT FOR CONSTRUCTION

DEMOLITION
PLANTS IV & V
ELECTRICAL ROOM
DEMOLITION PLAN

DESIGN DB | DRAWN MC | CHECKED JHM

DATE
JULY 2022

PROJECT NUMBER
20-018

DRAWING NUMBER
ED-00-101

SHEET NO. 27 OF

REUSE OF DOCUMENTS: THIS DOCUMENT, AND THE IDEAS AND DESIGN INCORPORATED HEREIN, AS AN INSTRUMENT OF PROFESSIONAL SEVICE, IS THE PROPERTY OF WATER WORKS ENGINEERS, LLC. AND IS NOT TO BE USED, IN WHOLE OR PART, FOR ANY OTHER PROJECT WITHOUT THE WRITTEN AUTHORIZATION OE WATER WORKS ENGINEERS,LLC.

FILE PATH: BIM 360://20-018 SPA 1 WRF Capacity Exp Facility Rerating/2018D-M-Blower Building.rvt

DATE AND TIME: 7/26/2022 3:59:40 PM

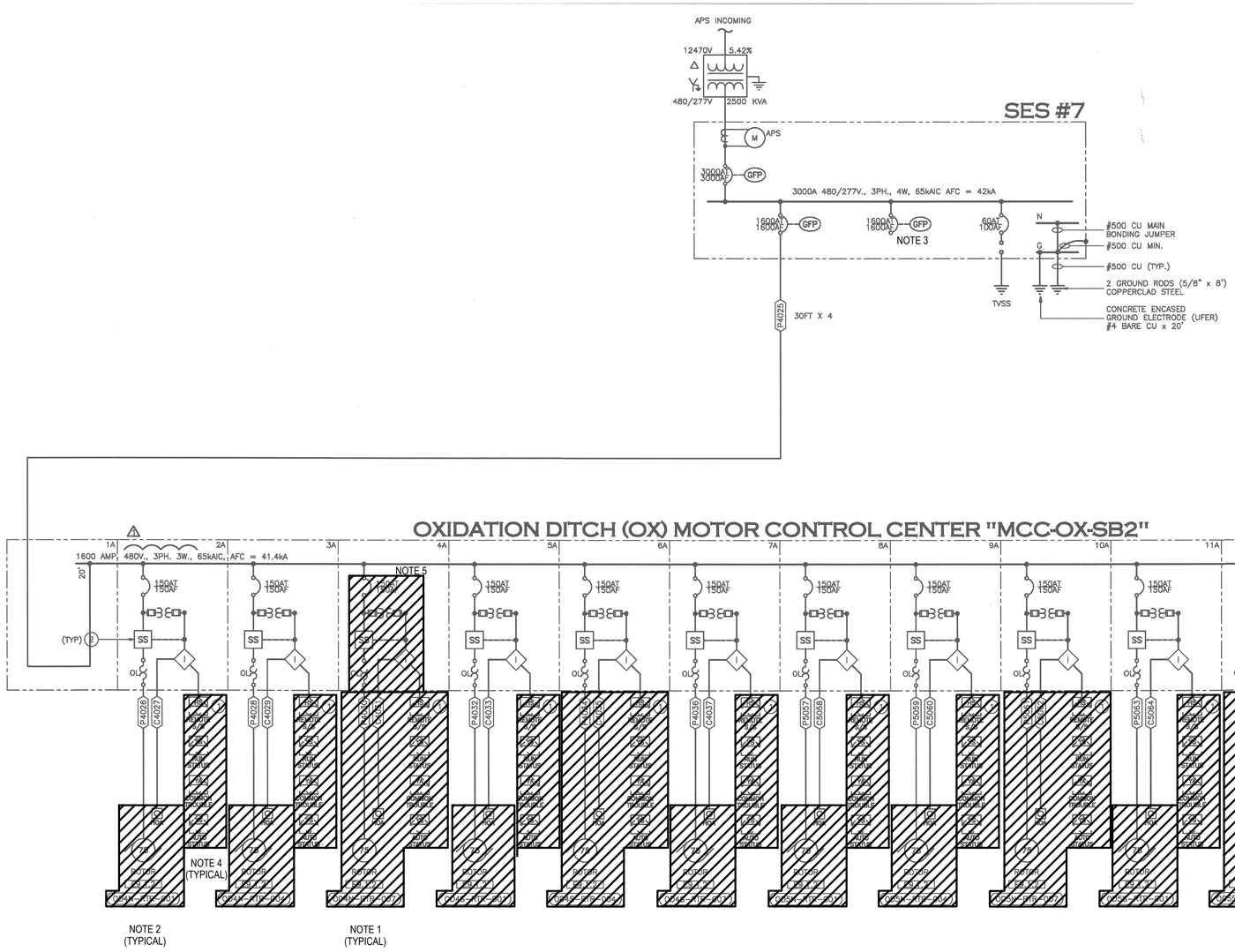

1 EXISTING MCC-OX-SB2 ONE-LINE DIAGRAM - DEMO

- SCALE: NONE

GENERAL NOTE:

ALL EXISTING EQUIPMENT, FEEDERS, AND GROUNDING SYSTEM SHOWN ON THIS ONE-LINE ARE TO REMAIN EXISTING UNLESS NOTED OTHERWISE.

NOTES:

1. REMOVE 75HP, 460V, 3PH MOTOR AND ALL ASSOCIATED POWER AND CONTROL WIRING BACK TO MCC BUCKET AND LABEL BUCKET AT MCC "SPARE". CONTRACTOR MAY RETAIN EXISTING CONDUIT IF NEEDED.
2. REMOVE 75HP, 460V, 3PH MOTOR AND LOCAL CONTROL STATION. CONTRACTOR TO RETAIN EXISTING UNDERGROUND CONDUIT AS NEEDED. REFER TO MODIFIED ONE-LINE DIAGRAM FOR NEW WORK.
3. REFER TO MODIFIED ONE-LINE DIAGRAM FOR NEW WORK.
4. REMOVE ANALOG AND DIGITAL SIGNALS FROM MCC BUCKET TO PLC CABINET. RETAIN EXISTING CONDUIT FOR NEW SIGNALS. REFER TO MODIFIED ONE-LINE DIAGRAM FOR NEW WORK.
5. REMOVE BREAKER, SOFT STARTER, POTENTIAL TRANSFORMER, AND OVERLOAD IN THIS BUCKET. REFER TO MODIFIED ONE-LINE DIAGRAM FOR NEW WORK.

NO.	REVISION	REV BY	CKD BY	DATE
-	-	-	-	-

SURPRISE ARIZONA

CITY OF SURPRISE
SPA 1 WRF CAPACITY EXP
FACILITY RERATING

WATER WORKS ENGINEERS

ELECTRICAL

EXISTING MCC-OX-SB2 ONE-LINE DIAGRAM - DEMOLITION

CHECKED	DRAWN	DESIGN
BGY	CAY	ER

30% SUBMITTAL

NOT FOR CONSTRUCTION

DATE: JULY 2022
PROJECT NUMBER: 20-018
DRAWING NUMBER: ED-00-102
SHEET NO. ###

REUSE OF DOCUMENTS: THIS DOCUMENT, AND THE IDEAS AND DESIGN INCORPORATED HEREIN, AS AN INSTRUMENT OF PROFESSIONAL SEVICE, IS THE PROPERTY OF WATER WORKS ENGINEERS, LLC. AND IS NOT TO BE USED, IN WHOLE OR PART, FOR ANY OTHER PROJECT WITHOUT THE WRITTEN AUTHORIZATION OE WATER WORKS ENGINEERS,LLC.

FILE PATH:C:\USERS\EDGARR\ACCDOCS\WATER WORKS ENGINEERS\20-018 SPA 1 WRF CAPACITY EXP FACILITY RERATING\PROJECT FILES\DRAWINGS\2018D-ED-00-102.DWG

DATE AND TIME: 8/12/2022 3:22:10 PM

GENERAL NOTE:

ALL EXISTING EQUIPMENT, FEEDERS, AND GROUNDING SYSTEM SHOWN ON THIS ONE-LINE ARE TO REMAIN EXISTING UNLESS NOTED OTHERWISE.

NOTES:

1. REMOVE 75HP, 460V, 3PH MOTOR AND ALL ASSOCIATED POWER AND CONTROL WIRING BACK TO MCC BUCKET AND LABEL BUCKET AT MCC "SPARE". CONTRACTOR MAY RETAIN EXISTING CONDUIT IF NEEDED.
2. REMOVE 75HP, 460V, 3PH MOTOR AND LOCAL CONTROL STATION. CONTRACTOR TO RETAIN EXISTING UNDERGROUND CONDUIT AS NEEDED. REFER TO MODIFIED ONE-LINE DIAGRAM FOR NEW WORK.
3. REMOVE ANALOG AND DIGITAL SIGNALS FROM MCC BUCKET TO PLC CABINET. RETAIN EXISTING CONDUIT FOR NEW SIGNALS. REFER TO MODIFIED ONE-LINE DIAGRAM FOR NEW WORK.
4. REMOVE BREAKER, SOFT STARTER, POTENTIAL TRANSFORMER, AND OVERLOAD IN THIS BUCKET. REFER TO MODIFIED ONE-LINE DIAGRAM FOR NEW WORK.

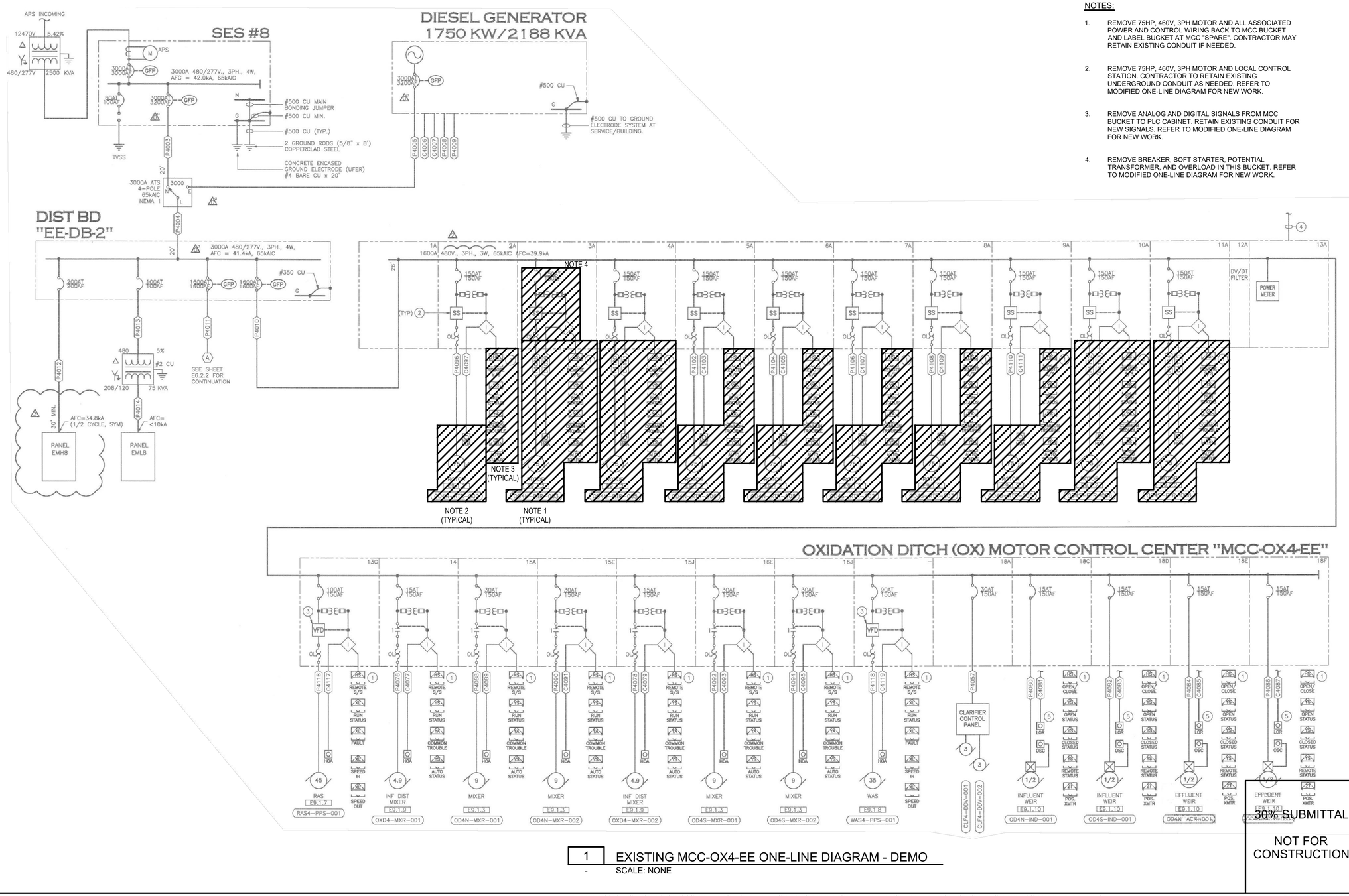

1 EXISTING MCC-OX4-EE ONE-LINE DIAGRAM - DEMO

- SCALE: NONE

NO.	REVISION	REV BY	CKD BY	DATE
-	-	-	-	-

SURPRISE ARIZONA

CITY OF SURPRISE
SPA 1 WRF CAPACITY EXP
FACILITY RERATING

WATER WORKS ENGINEERS

ELECTRICAL

EXISTING MCC-OX4-EE ONE-LINE DIAGRAM - DEMOLITION

CHECKED BGY

DRAWN CAY

DESIGN ER

30% SUBMITTAL

NOT FOR CONSTRUCTION

DATE
JULY 2022

PROJECT NUMBER
20-018

DRAWING NUMBER
ED-00-103

SHEET NO. ###

REUSE OF DOCUMENTS: THIS DOCUMENT, AND THE IDEAS AND DESIGN INCORPORATED HEREIN, AS AN INSTRUMENT OF PROFESSIONAL SEVICE, IS THE PROPERTY OF WATER WORKS ENGINEERS, LLC. AND IS NOT TO BE USED, IN WHOLE OR PART, FOR ANY OTHER PROJECT WITHOUT THE WRITTEN AUTHORIZATION OE WATER WORKS ENGINEERS,LLC.

FILE PATH:C:\USERS\EDGARR\ACCDOCS\WATER WORKS ENGINEERS\20-018 SPA 1 WRF CAPACITY EXP FACILITY RERATING\PROJECT FILES\DRAWINGS\2018D-ED-00-103.DWG

DATE AND TIME: 8/12/2022 3:22:10 PM

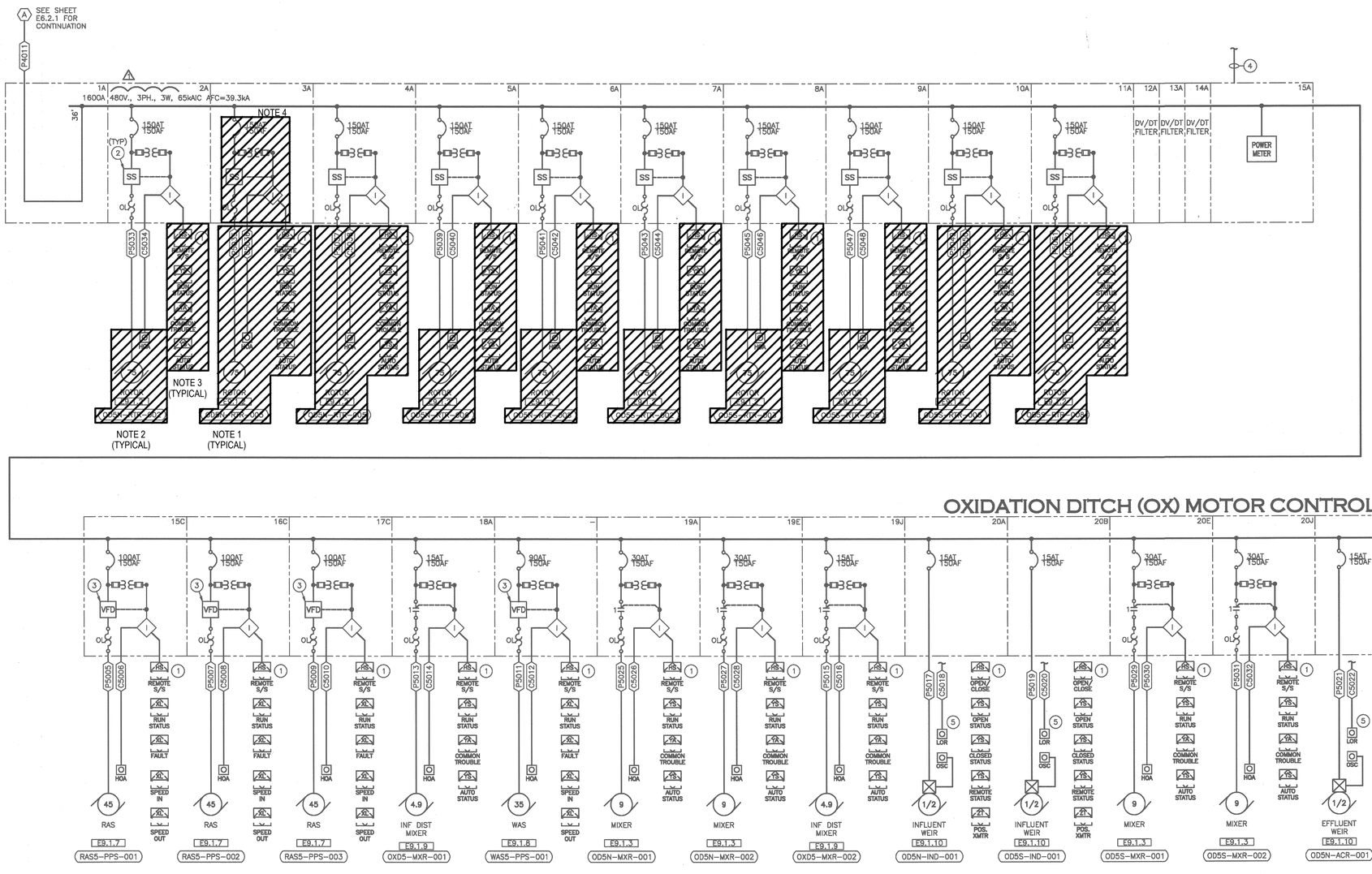

1 EXISTING MCC-OX5-EE ONE-LINE DIAGRAM - DEMO

- SCALE: NONE

GENERAL NOTE:

ALL EXISTING EQUIPMENT, FEEDERS, AND GROUNDING SYSTEM SHOWN ON THIS ONE-LINE ARE TO REMAIN EXISTING UNLESS NOTED OTHERWISE.

NOTES:

1. REMOVE 75HP, 460V, 3PH MOTOR AND ALL ASSOCIATED POWER AND CONTROL WIRING BACK TO MCC BUCKET AND LABEL BUCKET AT MCC "SPARE". CONTRACTOR MAY RETAIN EXISTING CONDUIT IF NEEDED.
2. REMOVE 75HP, 460V, 3PH MOTOR AND LOCAL CONTROL STATION. CONTRACTOR TO RETAIN EXISTING UNDERGROUND CONDUIT AS NEEDED. REFER TO MODIFIED ONE-LINE DIAGRAM FOR NEW WORK.
3. REMOVE ANALOG AND DIGITAL SIGNALS FROM MCC BUCKET TO PLC CABINET. RETAIN EXISTING CONDUIT FOR NEW SIGNALS. REFER TO MODIFIED ONE-LINE DIAGRAM FOR NEW WORK.
4. REMOVE BREAKER, SOFT STARTER, POTENTIAL TRANSFORMER, AND OVERLOAD IN THIS BUCKET. REFER TO MODIFIED ONE-LINE DIAGRAM FOR NEW WORK.

NO.	REVISION	REV BY	CKD BY	DATE
-	-	-	-	-

SURPRISE ARIZONA

CITY OF SURPRISE
SPA 1 WRF CAPACITY EXP
FACILITY RERATING

WATERWORKS ENGINEERS

ELECTRICAL

EXISTING MCC-OX5-EE ONE-LINE DIAGRAM - DEMOLITION

CHECKED BGY
DRAWN CAY
DESIGN ER

30% SUBMITTAL

NOT FOR CONSTRUCTION

DATE
JULY 2022
PROJECT NUMBER
20-018
DRAWING NUMBER
ED-00-104
SHEET NO. ###

REUSE OF DOCUMENTS: THIS DOCUMENT, AND THE IDEAS AND DESIGN INCORPORATED HEREIN, AS AN INSTRUMENT OF PROFESSIONAL SEVICE, IS THE PROPERTY OF WATER WORKS ENGINEERS, LLC. AND IS NOT TO BE USED, IN WHOLE OR PART, FOR ANY OTHER PROJECT WITHOUT THE WRITTEN AUTHORIZATION OE WATER WORKS ENGINEERS,LLC.

FILE PATH:C:\USERS\EDGARR\ACCDOCS\WATER WORKS ENGINEERS\20-018 SPA 1 WRF CAPACITY EXP FACILITY RERATING\PROJECT FILES\DRAWINGS\2018D-ED-00-104.DWG

DATE AND TIME: 8/12/2022 3:22:10 PM

DESC		RUN			CONDUIT		POWER CONDUCTORS		INSTR./CONTROL CONDUCTORS		OTHER CONDUCTORS		NOTES
CONDUIT NO.	WIRE NO.	FROM	VIA	TO	QTY/ SIZE	L (FT)	QTY	SIZE / TYPE	QTY	SIZE / TYPE	GND	SPARE	
C 4001		SES7		OX4 PLC (DATA)	1"					COMM			
C 4002		SES8		OX4 PLC (DATA)	1"					COMM			
P 4003		SES8		ATS	(5) 4"		4	#500			#350		
P 4004		ATS		EE-DB-2	(5) 4"		4	#500			#350		
P 4005		GENERATOR		ATS	(5) 4"		4	#500			#350		
C 4006		GENERATOR		ATS	1"				12	#14			
C 4007		GENERATOR		ANNUNICATOR	1"					VERIFY			
P 4008		PANEL EMLB		GENERATOR BLOCK HEATER	1"		2	#10			#10		
P 4009		PANEL EMLB		GENERATOR BATT CHARGER	1"		2	#12			#12		
P 4010		EE-DB-2		MCC-OX4-EE	(4) 4"		3	#500			#250		
P 4011		EE-DB-2		MCC-OX5-EE	(4) 4"		3	#500			#250		
P 4012		EE-DB-2		PANEL EMHB	2"		4	#3/0			#6		
C 4013		EE-DB-2		75 KVA XFMR	1-1/2"		3	#1			#8		
P 4014		75 KVA XFMR		PANEL EMLB	2-1/2"		4	#4/0			#2		
C 4015		INF BLDG		ADMIN BLDG (SCADA)	(2) 2"					VERIFY			
C 4016		INF BLDG		ADMIN BLDG (FIRE ALARM)	1-1/2"					TBD			
S 4017		INF BLDG		ADMIN BLDG (SPARE)	(2) 1"								
F 4018		INF BLDG		MAINT BLDG (FIRE)	1"					TBD			
C 4019		INF BLDG		MAINT BLDG (TEL/DATA)	2"					PULLROPE			
S 4020		INF BLDG		MAINT BLDG (SPARE)	(2) 2"					PULLROPE			
D 4021		MCC-OX4-EE		OX4 PLC	(2) 2"				68	#14			CONDUIT FILL SHALL BE VERIFIED WITH FINAL I/O COUNT
A 4022		MCC-OX4-EE		OX4 PLC	2"				8	#18 TSP			CONDUIT FILL SHALL BE VERIFIED WITH FINAL I/O COUNT
D 4023		MCC-OX5-EE		OX4 PLC	2"				60	#14			CONDUIT FILL SHALL BE VERIFIED WITH FINAL I/O COUNT
A 4024		MCC-OX-SB2		OX4 PLC	2"				4	#18 TSP			CONDUIT FILL SHALL BE VERIFIED WITH FINAL I/O COUNT
P 4025		SES7		MCC-OX-SB2	(4) 4"		3	#500			#250		
P 4026		MCC-OX-SB2		OD4N-RTR-001	2"	960	3	#3/0			#6		
C 4027		MCC-OX-SB2		LOCAL CONTROL STATION	1"				1	9/C#14			
P 4028		MCC-OX-SB2		OD4N-RTR-004	2"	850	3	#3/0			#6		
C 4029		MCC-OX-SB2		LOCAL CONTROL STATION	1"				1	9/C#14			
P 4030		MCC-OX-SB2		OD4S-RTR-001	2"	1080	3	#3/0			#6		
C 4031		MCC-OX-SB2		LOCAL CONTROL STATION	1"				1	9/C#14			
P 4032		MCC-OX-SB2		OD4S-RTR-001	2"	1080	3	#3/0			#6		
C 4033		MCC-OX-SB2		LOCAL CONTROL STATION	1"				1	9/C#14			
P 4034		MCC-OX-SB2		OD4S-RTR-007	1-1/2	820	3	#1/0			#6		
C 4035		MCC-OX-SB2		LOCAL CONTROL STATION	1"				1	9/C#14			
P 4036		MCC-OX-SB2		OD4S-RTR-007	1-1/2	820	3	#1/0			#6		
C 4037		MCC-OX-SB2		LOCAL CONTROL STATION	1"				1	9/C#14			
P 4038		MCC-OX-SB2		WAS4-PPS-002	1-1/2"	780	3	#2			#8		
C 4039		MCC-OX-SB2		LOCAL CONTROL STATION	1"				1	9/C#14			
P 4040		MCC-OX-SB2		WAS4-PPS-002	1-1/2"	780	3	#4			#6		
C 4041		MCC-OX-SB2		MANHOLE	1"				1	9/C#14			
P 4042		E1-DB-1		MAINT BLDG DISC	4"	300	4	#500			#1		COIL NEUTRAL EACH END (3 WIRE SERVICE)
S 4043		INF BLDG		MANHOLE	2"			PULL ROPE					
S 4044		INF BLDG		MANHOLE	2"			PULL ROPE					
S 4045		INF BLDG		MANHOLE	2"			PULL ROPE					
S 4046		INF BLDG		MANHOLE	2"			PULL ROPE					
S 4047		INF BLDG		MANHOLE	2"			PULL ROPE					
S 4048		INF BLDG		MANHOLE	2"			PULL ROPE					
S 4049		INF BLDG		MANHOLE	2"			PULL ROPE					
S 4050		INF BLDG		MANHOLE	2"			PULL ROPE					
F 4051		MAINT BLDG		ADMIN BLDG (FIRE)	1"			PULL ROPE					
C 4052		MAINT BLDG		ADMIN BLDG (TEL/DAT)	2"			PULL ROPE					
S 4053		MAINT BLDG		ADMIN BLDG	2"			PULL ROPE					
A 4054		OX4 PLC		P3/4 TURBIDITY METERS-SIGNAL	1"				2	#18 TSP			
P 4055		PANEL EMLB		P3/4 TURBIDITY SAMPLE PUMPS/METERS	1"	505	4	#8			#8		
D 4056		OX4-PLC		P3/4 CLARIFIER CONTROL PANEL	1"				1	9/C#12			
P 4057		MCC-OX4-EE		P3/4 CLARIFIER CONTROL PANEL	1"	600	3	#10			#10		
A 4058		OX4-PLC		COAG FEED SYSTEM LCP	1"					2#18 TSP			COIL EACH END FOR FUTURE
D 4059		OX4-PLC		COAG FEED SYSTEM LCP	1"					4#14			
P 4060		PANEL EMLB		COAG FEED SYSTEM LCP	1"		3	#10			#10		
S 4061		MAINT BLDG		ADMIN BLDG	2"			PULL ROPE					
4062													
4063													
A 4064		MCC-OX4-EE		P4 OX DITCH N/S - DO/LEVEL	1"				4	#18 TSP			
P 4065		PANEL EMLB		P4 OX DITCH N/S - DO/LEVEL	1"		2	#12			#12		
A 4066		MCC-OX4-EE		P4 INFLUENT FLOW	1"				1	#18 TSP			
P 4067		PANEL EMLB		P4 INFLUENT FLOW	1"		2	#12			#12		
A 4068		OX4 PLC		RAS FLOW	1"				4	#18 TSP			
P 4069		PANEL EMLB		RAS FLOW	1"		2	#12			#12		
4070													
4071													
P 4072		PANEL EMHB		AREA LIGHTING	1"	1110	4	#8			#8		
P 4073		PANEL EMLB		AREA GEN RECEPTS (GFCI)	1"		3	#8			#8		
4074													
4075													
P 4076		MCC-OX4-EE		OXD4-MXR-001	1"	1100	3	#10			#8		
C 4077		MCC-OX5-EE		LOCAL CONTROL STATION	1"				1	9/C#14			
P 4078		MCC-OX4-EE		OXD4-MXR-002	1"	1090	3	#10			#8		
C 4079		MCC-OX5-EE		LOCAL CONTROL STATION	1"				1	9/C#14			
P 4080		MCC-OX4-EE		OD4N-IND-001	1"	1040	3	#10			#10		
C 4081		OX4-PLC		LOCAL CONTROL STATION	1"				1	9/C#14			
P 4082		MCC-OX4-EE		OD4S-IND-001	1"	1080	3	#10			#10		
C 4083		OX4-PLC		LOCAL CONTROL STATION	1"				1	9/C#14			
P 4084		MCC-OX4-EE		OD4N-ACR-001	1"	680	3	#10			#10		
C 4085		OX4-PLC		LOCAL CONTROL STATION	1"				1	9/C#14			
P 4086		MCC-OX4-EE		OD4S-ACR-001	1"	750	3	#10			#10		
C 4087		MCC-OX4-EE		LOCAL CONTROL STATION	1"				1	9/C#14			
P 4088		MCC-OX4-EE		OD4N-MXR-001	1"	540	3	#10			#10		
C 4089		MCC-OX5-EE		LOCAL CONTROL STATION	1"				1	9/C#14			
P 4090		MCC-OX4-EE		OD4N-MXR-002	1"	530	3	#10			#10		
C 4091		MCC-OX5-EE		LOCAL CONTROL STATION	1"				1	9/C#14			
P 4092		MCC-OX4-EE		OD4S-MXR-001	1"	600	3	#10			#10		
C 4093		MCC-OX5-EE		LOCAL CONTROL STATION	1"				1	9/C#14			
P 4094		MCC-OX4-EE		OD4S-MXR-002	1"	590	3	#10			#10		
C 4095		MCC-OX5-EE		LOCAL CONTROL STATION	1"				1	9/C#14			
P 4096		MCC-OX4-EE		OD4N-RTR-002	2"	910	3	#3/0			#6		
C 4097		MCC-OX4-EE		LOCAL CONTROL STATION	1"				1	9/C#14			
P 4098		MCC-OX4-EE		OD4S-RTR-002	2"	900	3	#3/0			#6		
C 4099		MCC-OX5-EE		LOCAL CONTROL STATION	1"				1	9/C#14			
P 4100		MCC-OX4-EE		OD4S-RTR-002	2"	900	3	#3/0			#6		
C 4101		MCC-OX5-EE		LOCAL CONTROL STATION	1"				1	9/C#14			

NOTE 2, 3 (TYPICAL)

NOTE 1 (TYPICAL)

GENERAL NOTES

A. SINGLE CONDUCTOR POWER AND CONTROL WIRING SHALL BE XHHW.

MULTI-CONDUCTOR CONTROL WIRING SHALL BE TYPE XHHW WITH PVC JACKET.

MULTI-CONDUCTOR POWER CABLE SHALL BE TYPE EPR WITH PVC JACKET

REFER TO WIRE AND CABLE SPECIFICATIONS 16120 FOR DETAILS.

NOTES:

1. CONTRACTOR TO REMOVE CABLES FROM MOTOR TERMINATION TO MOTOR CONTROL CENTER FOR A COMPLETE REMOVAL OF WIRING. CONTRACTOR MAY RETAIN EXISTING CONDUIT AS NEEDED.
2. CONTRACTOR MAY RE-USE EXISTING CABLES FOR NEW 75HP, 460V, 3PH JET AERATION MOTOR.
3. 3. CONTRACTOR TO REMOVE ALL CONTROL WIRING FROM CONTROL STATION TO MOTOR CONTROL CENTER. RETAIN EXISTING CONDUIT FOR NEW CONTROLS.

NO.	REVISION	REV BY	CKD BY	DATE
-	-	-	-	-

SURPRISE ARIZONA

CITY OF SURPRISE
SPA 1 WRF CAPACITY EXP
FACILITY RERATING

WATERWORKS ENGINEERS

ELECTRICAL

CONDUIT SCHEDULES
PLANT IV

CHECKED BGY
DRAWN CAY
DESIGN ER

30% SUBMITTAL

NOT FOR CONSTRUCTION

DATE
JULY 2022

PROJECT NUMBER
20-018

DRAWING NUMBER
ED-00-105

SHEET NO. ###

REUSE OF DOCUMENTS: THIS DOCUMENT, AND THE IDEAS AND DESIGN INCORPORATED HEREIN, AS AN INSTRUMENT OF PROFESSIONAL SEVICE, IS THE PROPERTY OF WATER WORKS ENGINEERS, LLC. AND IS NOT TO BE USED, IN WHOLE OR PART, FOR ANY OTHER PROJECT WITHOUT THE WRITTEN AUTHORIZATION OE WATER WORKS ENGINEERS,LLC.

FILE PATH: File Path

DATE AND TIME: 10/11/2013 3:33:16 PM

DESC			RUN			CONDUIT		POWER CONDUCTORS		INSTR./CONTROL CONDUCTORS		OTHER CONDUCTORS		NOTES
CONDUIT NO.		WIRE NO.	FROM	VIA	TO	QTY/ SIZE	L (FT)	QTY	SIZE / TYPE	QTY	SIZE / TYPE	GND	SPARE	
P	4102		MCC-OX4-EE		OD4N-RTR-006	2"	655	3	#3/0			#6		
C	4103		MCC-OX4-EE		LOCAL CONTROL STATION	1"				1	9/C#14			
P	4104		MCC-OX4-EE		OD4N-RTR-008	2"	800	3	#1/0			#6		
C	4105		MCC-OX4-EE		LOCAL CONTROL STATION	1"				1	9/C#14			
P	4106		MCC-OX4-EE		OD4S-RTR-002	2"	915	3	#3/0			#6		
C	4107		MCC-OX4-EE		LOCAL CONTROL STATION	1"				1	9/C#14			
P	4108		MCC-OX4-EE		OD4S-RTR-003	2"	860	3	#3/0			#6		
C	4109		MCC-OX4-EE		LOCAL CONTROL STATION	1"				1	9/C#14			
P	4110		MCC-OX4-EE		OD4S-RTR-005	2"	800	3	#3/0			#6		
C	4111		MCC-OX4-EE		LOCAL CONTROL STATION	1"				1	9/C#14			
P	4112		MCC-OX4-EE		OD4S-RTR-004	2"	850	3	#3/0			#6		
C	4113		MCC-OX4-EE		LOCAL CONTROL STATION	1"				1	9/C#14			
P	4114		MCC-OX4-EE		OD4S-RTR-001	2"	1020	3	#3/0			#6		
C	4115		MCC-OX4-EE		LOCAL CONTROL STATION	1"				1	9/C#14			
P	4116		MCC-OX4-EE		RAS4-PPS-001	1-1/2"	745	3	#2			#6		VERIFY PHASE CONDUCTOR
C	4117		MCC-OX4-EE		LOCAL CONTROL STATION	1"				1	9/C#14			
P	4118		MCC-OX4-EE		WAS4-PPS-001	1-1/2"	780	3	#4			#6		
C	4119		MCC-OX4-EE		LOCAL CONTROL STATION	1"				1	9/C#14			
P	4200		EE-DB-B		MCC-EF-EE2	(3) 4"		3	#500 XHHW			#250		
P	4201		MCC-EF-EE2		EFFLUENT PUMP	2"	500	1	3C/#3/0 W/GND			#6		
C	4202		MCC-EF-EE2		LOCAL CONTROL STATION	1"	500			1	9/C#14			
P	4203		MCC-EF-EE2		EFFLUENT PUMP	2"	500	1	3C/#3/0 W/GND			#6		
C	4204		MCC-EF-EE2		LOCAL CONTROL STATION	1"	500			1	9/C#14			
P	4205		MCC-EF-EE2		EFFLUENT PUMP	2"	500	1	3C/#3/0 W/GND			#6		
C	4206		MCC-EF-EE2		LOCAL CONTROL STATION	1"	500			1	9/C#14			
P	4207		MCC-EF-EE2		EFFLUENT PUMP	2"	500	1	3C/#3/0 W/GND			#6		
C	4208		MCC-EF-EE2		LOCAL CONTROL STATION	1"	500			1	9/C#14			
P	4209		MCC-EF-EE2		EFFLUENT PUMP	2"	500	1	3C/#3/0 W/GND			#6		
C	4210		MCC-EF-EE2		LOCAL CONTROL STATION	1"	500			1	9/C#14			
P	4211		SES 6		MCC-EF-SB2	3"	30	3	#500 XHHW			#2		
P	4212		MCC-EF-SB2		NON-POTABLE WATER PUMP 1	2"	500	1	3C/#2/0 W/GND			#6		
C	4213		MCC-EF-SB2		LOCAL CONTROL STATION	1"	500			1	9/C#14			
P	4214		MCC-EF-EE		NON-POTABLE WATER PUMP	2"	500	1	3C/#2/0 W/GND			#6		
C	4215		MCC-EF-EE		NON-POTABLE WATER CONTROL	1"	500			1	9/C#14			
P	4216		MCC-EF-SB2		NON-POTABLE WATER/AIRCOMPRESSOR POWER	1-1/2"	500	3	#10			#10		
D	4217		P4 EFFL. PLC		NON-POT CONTROL PANEL DISCRETE	2"	500			12	#14			(REMAINDER TO BE SPARE)
S	4218		EFFL. BLDG.		EFFLUENT MANHOLE - SPARE	1"			PULL ROPE					STUB CONDUIT AT EFFLUENT BUILDING POWER & CONTROLS PULLBOX
P	4219		NPW PANEL		AIR COMPRESSOR	1"	30	3	#10	6	#14	#10		CONTROL WIRING QTY. TO BE VERIFIED W/ CONTROL PANEL VENDOR
P	4220		EMH1-19,21,23		SITE LIGHTING	1"	550	3	#10			#10		
D	4221		P4 EFFL. PLC		P4,P5 EFFLUENT PUMP STATION "DISCRETE I/O"	2"				24	#14			4#14 ARE SPARE ((7) LEVEL SWITCHES, (1) PSH LOW PRESSURE EFFLUENT, (1)PSH NON POT, (1) PSL NON POT)
A	4222		P4 EFFL. PLC	PULLBOX	P4,P5 EFFLUENT PUMP STATION "ANALOG I/O"	2"				10	#18 TSP			STUB CONDUIT AT EFFLUENT BUILDING ANALOG PULLBOX, INCLUDES 2 SPARES, 2#18TSP EACH FIT LOW AND HIGH PRESSURE
	4223													
A	4224		P4 EFFL. PLC	PULLBOX	INSTRUMENTATION MANHOLE - SPARE	2"	500				PULL ROPE			STUB CONDUIT AT EFFLUENT BUILDING ANALOG PULLBOX
	4225													
P	4226		EMPL2-9,11		INSTRUMENT POWER, EFFLUENT AREA	1"		2	#10			#10		EFFLUENT BUILDING
S	4227		P4 EFFL. PLC		EFFLUENT MANHOLE	2"			PULLROPE					STUB CONDUIT AT EFFLUENT BUILDING POWER & CONTROLS PULLBOX
A	4228		EFFL. BLDG.	PULLBOX	NON-POT CONTROL PANEL ANALOG	2"				1	#18 TSP			STUB CONDUIT AT EFFLUENT BUILDING ANALOG PULLBOX (SURGE TANK LEVEL)
S	4229		EFFL. BLDG.		EFFLUENT MANHOLE	2"			PULLROPE					STUB CONDUIT AT EFFLUENT BUILDING POWER & CONTROLS PULLBOX
S	4230		EFFL. BLDG.		EFFLUENT MANHOLE	1"			PULLROPE					STUB CONDUIT AT EFFLUENT BUILDING POWER & CONTROLS PULLBOX
S	4231		EFFL. BLDG.		EFFLUENT MANHOLE	1"			PULLROPE					STUB CONDUIT AT EFFLUENT BUILDING POWER & CONTROLS PULLBOX
P	201		MCC-EF-EE		HIGH PRESS. RECLAIM PUMP #1	3"	500	3	#500			#2		SPLICE CONDUCTORS IN EXISTING MANHOLE USING APPROVED SPLICE KIT
C	201		MCC-EF-EE		HIGH PRESS. RECLAIM PUMP #1	1"	500			10	#14	#12		EXTEND EXISTING CONDUIT FROM CURRENT LOCATION VIA MANHOLE, INSTALL NEW CONDUCTORS
P	202		MCC-EF-SB		HIGH PRESS. RECLAIM PUMP #2	3"	500	3	#500			#2		SPLICE CONDUCTORS IN EXISTING MANHOLE USING APPROVED SPLICE KIT
C	202		MCC-EF-SB		HIGH PRESS. RECLAIM PUMP #2	1"	500			10	#14	#12		EXTEND EXISTING CONDUIT FROM CURRENT LOCATION VIA MANHOLE, INSTALL NEW CONDUCTORS

NOTE 2, 3 (TYPICAL)

NOTE 1 (TYPICAL)

GENERAL NOTES

A. SINGLE CONDUCTOR POWER AND CONTROL WIRING SHALL BE XHHW.

MULTI-CONDUCTOR CONTROL WIRING SHALL BE TYPE XHHW WITH PVC JACKET.

MULTI-CONDUCTOR POWER CABLE SHALL BE TYPE EPR WITH PVC JACKET

REFER TO WIRE AND CABLE SPECIFICATIONS 16120 FOR DETAILS.

NOTES:

1. CONTRACTOR TO REMOVE CABLES FROM MOTOR TERMINATION TO MOTOR CONTROL CENTER FOR A COMPLETE REMOVAL OF WIRING. CONTRACTOR MAY RETAIN EXISTING CONDUIT AS NEEDED.
2. CONTRACTOR MAY RE-USE EXISTING CABLES FOR NEW 75HP, 460V, 3PH JET AERATION MOTOR.
3. CONTRACTOR TO REMOVE ALL CONTROL WIRING FROM CONTROL STATION TO MOTOR CONTROL CENTER. RETAIN EXISTING CONDUIT FOR NEW CONTROLS.

NO.	REVISION	REV BY	CKD BY	DATE
-	-	-	-	-

SURPRISE ARIZONA

CITY OF SURPRISE
SPA1 WRF CAPACITY EXP
FACILITY RERATING

WATER WORKS ENGINEERS

ELECTRICAL

CONDUIT SCHEDULES
PLANT IV OXIDATION DITCH/IV & V EFFLUENT

CHECKED BGY
DRAWN CAY
DESIGN ER

30% SUBMITTAL

NOT FOR CONSTRUCTION

DATE
JULY 2022

PROJECT NUMBER
20-018

DRAWING NUMBER
ED-00-106

SHEET NO. ###

REUSE OF DOCUMENTS: THIS DOCUMENT, AND THE IDEAS AND DESIGN INCORPORATED HEREIN, AS AN INSTRUMENT OF PROFESSIONAL SEVICE, IS THE PROPERTY OF WATER WORKS ENGINEERS, LLC. AND IS NOT TO BE USED, IN WHOLE OR PART, FOR ANY OTHER PROJECT WITHOUT THE WRITTEN AUTHORIZATION OE WATER WORKS ENGINEERS,LLC.

FILE PATH: File Path

DATE AND TIME: 10/11/2013 3:33:16 PM

DESC		RUN			CONDUIT		POWER CONDUCTORS		INSTR./CONTROL CONDUCTORS		OTHER CONDUCTORS		NOTES
CONDUIT NO.	WIRE NO.	FROM	VIA	TO	QTY/ SIZE	L (FT)	QTY	SIZE / TYPE	QTY	SIZE / TYPE	GND	SPARE	
D 5001		MCC-0X5-EE		0X5 PLC	(2) 2"				80	#14			CONDUIT FILL SHALL BE VERIFIED WITH FINAL I/O COUNT
A 5002		MCC-0X5-EE		0X5 PLC	2"				12	#18 TSP			CONDUIT FILL SHALL BE VERIFIED WITH FINAL I/O COUNT
D 5003		MCC-0X-SB2		0X5 PLC	2"				48	#14			CONDUIT FILL SHALL BE VERIFIED WITH FINAL I/O COUNT
5004													
P 5005		MCC-0X5-EE		RAS5-PPS-001	1-1/2"	775	3	#2			#6		
C 5006		MCC-0X5-EE		LOCAL CONTROL STATION	1"				1	9/C#14			
P 5007		MCC-0X5-EE		RAS5-PPS-002	1-1/2"	770	3	#2			#6		
C 5008		MCC-0X5-EE		LOCAL CONTROL STATION	1"				1	9/C#14			
P 5009		MCC-0X5-EE		RAS5-PPS-003	1-1/2"	765	3	#2			#6		
C 5010		MCC-0X5-EE		LOCAL CONTROL STATION	1"				1	9/C#14			
P 5011		MCC-0X5-EE		WAS5-PPS-001	1-1/2"	765	3	#4			#6		
C 5012		MCC-0X5-EE		LOCAL CONTROL STATION	1"				1	9/C#14			
P 5013		MCC-0X5-EE		0X05-MXR-001	1"	1270	3	#8			#8		
C 5014		MCC-0X5-EE		LOCAL CONTROL STATION	1"				1	9/C#14			
P 5015		MCC-0X5-EE		0X05-MXR-002	1"	1260	3	#8			#8		
C 5016		MCC-0X5-EE		LOCAL CONTROL STATION	1"				1	9/C#14			
P 5017		MCC-0X5-EE		OD5N-IND-001	1"	1210	3	#10			#10		
C 5018		MCC-0X5-EE		LOCAL CONTROL STATION	1"				1	9/C#14			
P 5019		MCC-0X5-EE		OD5S-IND-001	1"	1250	3	#10			#10		
C 5020		MCC-0X5-EE		LOCAL CONTROL STATION	1"				1	9/C#14			
P 5021		MCC-0X5-EE		OD5N-ACR-001	1"	850	3	#10			#10		
C 5022		MCC-0X5-EE		LOCAL CONTROL STATION	1"				1	9/C#14			
P 5023		MCC-0X5-EE		OD5S-ACR-001	1"	920	3	#10			#10		
C 5024		MCC-0X5-EE		LOCAL CONTROL STATION	1"				1	9/C#14			
P 5025		MCC-0X5-EE		OD5N-MXR-001	1"	830	3	#8			#8		
C 5026		MCC-0X5-EE		LOCAL CONTROL STATION	1"				1	9/C#14			
P 5027		MCC-0X5-EE		OD5N-MXR-002	1"	810	3	#8			#8		
C 5028		MCC-0X5-EE		LOCAL CONTROL STATION	1"				1	9/C#14			
P 5029		MCC-0X5-EE		OD5S-MXR-001	1"	880	3	#8			#8		
C 5030		MCC-0X5-EE		LOCAL CONTROL STATION	1"				1	9/C#14			
P 5031		MCC-0X5-EE		OD5S-MXR-002	1"	900	3	#8			#8		
C 5032		MCC-0X5-EE		LOCAL CONTROL STATION	1"				1	9/C#14			
P 5033		MCC-0X5-EE		OD5N-RTR-002	2"	1080	3	#3/0			#6		
C 5034		MCC-0X5-EE		LOCAL CONTROL STATION	1"				1	9/C#14			
P 5035		MCC-0X5-EE		OD5N-RTR-003	2"	1020	3	#3/0			#6		
C 5036		MCC-0X5-EE		LOCAL CONTROL STATION	1"				1	9/C#14			
P 5037		MCC-0X5-EE		OD5N-RTR-004	2"	1010	3	#3/0			#6		
C 5038		MCC-0X5-EE		LOCAL CONTROL STATION	1"				1	9/C#14			
P 5039		MCC-0X5-EE		OD5N-RTR-006	2"	980	3	#3/0			#6		
C 5040		MCC-0X5-EE		LOCAL CONTROL STATION	1"				1	9/C#14			
P 5041		MCC-0X5-EE		OD5N-RTR-008	2"	800	3	#3/0			#6		
C 5042		MCC-0X5-EE		LOCAL CONTROL STATION	1"				1	9/C#14			
P 5043		MCC-0X5-EE		OD5S-RTR-002	2"	1140	3	#3/0			#6		
C 5044		MCC-0X5-EE		LOCAL CONTROL STATION	1"				1	9/C#14			
P 5045		MCC-0X5-EE		OD5S-RTR-003	2"	1190	3	#3/0			#6		
C 5046		MCC-0X5-EE		LOCAL CONTROL STATION	1"				1	9/C#14			
P 5047		MCC-0X5-EE		OD5S-RTR-005	2"	1130	3	#3/0			#6		
C 5048		MCC-0X5-EE		LOCAL CONTROL STATION	1"				1	9/C#14			
P 5049		MCC-0X5-EE		OD5S-RTR-006	2"	1200	3	#3/0			#6		
C 5050		MCC-0X5-EE		LOCAL CONTROL STATION	1"				1	9/C#14			
P 5051		MCC-0X5-EE		OD5S-RTR-007	2"	1070	3	#3/0			#6		
C 5052		MCC-0X5-EE		LOCAL CONTROL STATION	1"				1	9/C#14			
A 5053		MCC-0X5-EE		P5 TURBIDITY METER-SIGNAL	1"				1	#18 TSP			
P 5054		PANEL EML8		P5 TURBIDITY SAMPLE PUMP/METER	1"	705	2	#8			#8		
D 5055		MCC-0X5-EE		P5 CLARIFIER CONTROL PANEL	1"				1	9/C#10			
P 5056		MCC-0X5-EE		P5 CLARIFIER CONTROL PANEL	1"	900	3	#8			#8		
P 5057		MCC-0X-SB2		OD5N-RTR-001	2"	1130	3	#3/0			#6		
C 5058		MCC-0X-SB2		LOCAL CONTROL STATION	1"				1	#9/C#14			
P 5059		MCC-0X-SB2		OD5N-RTR-004	2"	1020	3	#3/0			#6		
C 5060		MCC-0X-SB2		LOCAL CONTROL STATION	1"				1	#9/C#14			
P 5061		MCC-0X-SB2		OD5N-RTR-005	2"	1040	3	#3/0			#6		
C 5062		MCC-0X-SB2		LOCAL CONTROL STATION	1"				1	#9/C#14			
P 5063		MCC-0X-SB2		OD5S-RTR-001	2"	1240	3	#3/0			#6		
C 5064		MCC-0X-SB2		LOCAL CONTROL STATION	1"				1	#9/C#14			
P 5065		MCC-0X-SB2		OD5S-RTR-002	2"	1040	3	#3/0			#6		
C 5066		MCC-0X-SB2		LOCAL CONTROL STATION	1"				1	#9/C#14			
P 5067		MCC-0X-SB2		OD5S-RTR-007	2"	910	3	#3/0			#6		
C 5068		MCC-0X-SB2		LOCAL CONTROL STATION	1"				1	#9/C#14			
A 5069		MCC-0X5-EE		P5 OX DITCH N/S - DO/LEVEL	1"				4	#18 TSP			
P 5070		PANEL EML8		P5 OX DITCH N/S - DO/LEVEL	1"		2	#12			#12		
A 5071		MCC-0X5-EE		P5 INFLUENT FLOW	1"				1	#18 TSP			
P 5072		PANEL EML8		P5 INFLUENT FLOW	1"		2	#12			#12		
S 5073		INF BLDG		INSTRUMENTATION HANDHOLE	1"					PULLROPE			
S 5074		INF BLDG		INSTRUMENTATION HANDHOLE	1"					PULLROPE			
S 5075		INF BLDG		INSTRUMENTATION HANDHOLE	1"					PULLROPE			
S 5076		INF BLDG		INSTRUMENTATION HANDHOLE	1"					PULLROPE			
S 5077		INF BLDG		MANHOLE	1"			PULLROPE					
S 5078		INF BLDG		MANHOLE	1"			PULLROPE					
S 5079		INF BLDG		MANHOLE	1"			PULLROPE					
S 5080		INF BLDG		MANHOLE	1"			PULLROPE					
S 5081		INF BLDG		MANHOLE	1"			PULLROPE					
S 5082		INF BLDG		MANHOLE	1"			PULLROPE					
S 5083		INF BLDG		MANHOLE	1"			PULLROPE					
S 5084		INF BLDG		MANHOLE	1"			PULLROPE					
S 5085		INF BLDG		MANHOLE	1"			PULLROPE					
S 5086		INF BLDG		MANHOLE	1"			PULLROPE					
S 5087		INF BLDG		MANHOLE	1"			PULLROPE					
S 5088		INF BLDG		MANHOLE	1"			PULLROPE					
S 5089		INF BLDG		MANHOLE	1"			PULLROPE					
S 5090		INF BLDG		MANHOLE	1"			PULLROPE					
S 5091		INF BLDG		MANHOLE	1"			PULLROPE					
S 5092		INF BLDG		MANHOLE	1"			PULLROPE					
5093													
5094													
5095													
5096													
5097													
5098													
5099													
5100													
5101													

NOTE 2 (TYPICAL)

NOTE 1 (TYPICAL)

GENERAL NOTES

A. SINGLE CONDUCTOR POWER AND CONTROL WIRING SHALL BE XHHW.

MULTI-CONDUCTOR CONTROL WIRING SHALL BE TYPE XHHW WITH PVC JACKET.

MULTI-CONDUCTOR POWER CABLE SHALL BE TYPE EPR WITH PVC JACKET

REFER TO WIRE AND CABLE SPECIFICATIONS 16120 FOR DETAILS.

NOTES:

1. CONTRACTOR TO REMOVE CABLES FROM MOTOR TERMINATION TO MOTOR CONTROL CENTER FOR A COMPLETE REMOVAL OF WIRING. CONTRACTOR MAY RETAIN EXISTING CONDUIT AS NEEDED.
2. CONTRACTOR MAY RE-USE EXISTING CABLES FOR NEW 75HP, 460V, 3PH JET AERATION MOTOR.
3. CONTRACTOR TO REMOVE ALL CONTROL WIRING FROM CONTROL STATION TO MOTOR CONTROL CENTER. RETAIN EXISTING CONDUIT FOR NEW CONTROLS.

NO.	REVISION	REV BY	CKD BY	DATE
-	-	-	-	-

SURPRISE ARIZONA

CITY OF SURPRISE
SPA 1 WRF CAPACITY EXP
FACILITY RERATING

WATERWORKS ENGINEERS

ELECTRICAL

CONDUIT SCHEDULES
PLANT V

DESIGN ER | DRAWN CAY | CHECKED BGT

30% SUBMITTAL

NOT FOR CONSTRUCTION

DATE
JULY 2022

PROJECT NUMBER
20-018

DRAWING NUMBER
ED-00-107

SHEET NO. ###

DATE AND TIME: 10/11/2013 3:33:16 PM

REUSE OF DOCUMENTS: THIS DOCUMENT, AND THE IDEAS AND DESIGN INCORPORATED HEREIN, AS AN INSTRUMENT OF PROFESSIONAL SEVICE, IS THE PROPERTY OF WATER WORKS ENGINEERS, LLC. AND IS NOT TO BE USED, IN WHOLE OR PART, FOR ANY OTHER PROJECT WITHOUT THE WRITTEN AUTHORIZATION OE WATER WORKS ENGINEERS,LLC.

FILE PATH: File Path

SINGLE LINE DIAGRAM SYMBOLS & CONTROL DIAGRAM SYMBOLS

PUSH BUTTONS

NORMALLY OPEN (NO)	NORMALLY CLOSED (NC)	DESCRIPTION:
PB##	PB##	EMERGENCY STOP PUSH BUTTON WITH RED MUSHROOM HEAD OPERATOR (MAINTAINED CONTACT)
PB##	PB##	PUSH BUTTON, MOMENTARY CONTACT, SPRING RETURN
SSPB##		START/STOP PUSH BUTTON CONTROL STATION, MAINTAINED CONTACT WITH LOCKOUT DEVICE ON STOP

PILOT LIGHTS

CLR
FCN

PUSH TO TEST, 110V S6 LAMP UNLESS NOTED. LETTER IS LENS COLOR:

R = RED	G = GREEN
A = AMBER	Y = YELLOW
B = BLUE	W = WHITE
C = CLEAR	

SELECTOR SWITCHES

PB## (A, B) OX — PB## (A, B) OX — TWO (2) POSITION SELECTOR SWITCH

SS## (A, B) OX / XO — TWO (2) POSITION, TWO (2) POLE SELECTOR SWITCH

SS## (A, B) OX / XO / XO — TWO (2) POSITION, THREE (3) POLE SELECTOR SWITCH

SS## (A, B, C) XOO — SS## (A, B, C) OOX — THREE (3) POSITION SELECTOR SWITCH

SS## (A, B, C) XOO / OXO / OOX — THREE (3) POSITION, THREE (3) POLE SELECTOR SWITCH

SS## (A, B, C, D) OXOO — SS## (A, B, C, D) XOOO — FOUR (4) POSITION SELECTOR SWITCH

ANALOG I/O

AI## — AI — FCN — ANALOG INPUT

AO## — AO — FCN — ANALOG OUTPUT

SELECTOR SWITCHES

NORMALLY OPEN (NO)	NORMALLY CLOSED (NC)	DESCRIPTION:
SS## (A, B, C, D) XOOO / OXOO / OOXO / OOOX		FOUR (4) POSITION, FOUR (4) POLE SELECTOR SWITCH

RELAYS

CR## ??? — CR## ??? — RELAY CONTACT: NORMALLY OPEN (NO) NORMALLY CLOSED (NC)

CR## CR ### ??? — CONTROL RELAY COIL NUMBER AS INDICATED

LR##A L NO NC ??? — LATCH RELAY COIL

LR##B U NO NC ??? — UNLATCH RELAY COIL

LIMIT SWITCHES

FCN LS## — LS## FCN — POSITION (LIMIT) SWITCH

LS## ??? — LS## ??? — POSITION (LIMIT) SWITCH
NO: HELD CLOSED
NC: HELD OPEN

TS## ??? — TS## ??? — TORQUE SWITCH
NO: CLOSES ON HIGH TORQUE
NC: OPENS ON HIGH TORQUE

PRESSURE & TEMPERATURE SWITCHES

PS## ??? — PS## ??? — PRESSURE SWITCH
NO: CLOSES ON RISING PRESSURE
NC: OPENS ON DROPPING PRESSURE

PSV## V ??? — PSV## V ??? — VACUUM SWITCH
NO: CLOSES ON RISING PRESSURE
NC: OPENS ON DROPPING PRESSURE

DPS## ??? — DPS## ??? — DIFFERENTIAL PRESSURE SWITCH
NO: CLOSES ON RISING DIFFERENTIAL PRESSURE
NC: OPENS ON DROPPING DIFFERENTIAL PRESSURE

TS## ??? — TS## ??? — TEMPERATURE SWITCH
NO: CLOSES ON RISING TEMPERATURE
NC: OPENS ON RISING TEMPERATURE

FLOAT & FLOW SWITCHES

FLT## ??? — FLT## ??? — LIQUID LEVEL (FLOAT)
NO: CLOSES ON RISING LEVEL
NC: OPENS ON RISING LEVEL

FS## ??? — FS## ??? — FLOW SWITCH (AIR, WATER, ETC.)
NO: CLOSES ON INCREASED FLOW
NC: OPENS ON INCREASED FLOW

MISCELLANEOUS SWITCHES

NORMALLY OPEN (NO)	NORMALLY CLOSED (NC)	DESCRIPTION:
AUX## XO ???	AUX## XO ???	AUXILIARY SWITCH CONTACT
TGS### ???	TGS## ???	TOGGLE SWITCH
FTS## FCN	FTS## FCN	FOOT SWITCH
PRS### FCN	PRS### FCN	PROXY SWITCH
PCS## FCN	PCS## FCN	PULL CORD
APL## FCN	APL## FCN	A-PLUG
PE## FCN	PE## FCN	PHOTO EYE
SPDT##A		SINGLE POLE DOUBLE THROW (SPDT) MAINTAIN
SPDT##B		SINGLE POLE DOUBLE THROW (SPDT) RETURN FROM DOWN
SPDT##C		SINGLE POLE DOUBLE THROW (SPDT) RETURN FROM UP
SPDT##D		SINGLE POLE DOUBLE THROW (SPDT) RETURN FROM BOTH

TIMERS

TD## CR ### NO NC ?? DELAY — ON DELAY COIL

TD##A NO NC ON DELAY — ON DELAY MOTOR

TD##A NO NC OFF DELAY — OFF DELAY MOTOR

TD## FCN — TD## FCN
ON DELAY
NOTC: NORMALLY OPEN TIMED CLOSING, WHEN ENERGIZED
NCTO: NORMALLY CLOSED TIMED OPENING, WHEN ENERGIZED

TD## FCN — TD## FCN
OFF DELAY
NOTO: NORMALLY OPEN, TIMED OPENING WHEN DEENERGIZED
NCTC: NORMALLY CLOSED, TIMED CLOSING WHEN DEENERGIZED

DISCRETE I/O

SINGLE LINE / CONTROL DIAGRAM	DESCRIPTION:
DI## DI FCN	DISCRETE INPUT
DO## DO FCN	DISCRETE OUTPUT

TERMINALS & CONNECTORS

SINGLE LINE / CONTROL DIAGRAM	DESCRIPTION:
#?	DOT
? ? # #	SQUARE
? ? # #	ROUND
X ? # #	HEXAGON
? ? # #	DIAMOND
? ? # #	TRIANGLE
PDB##	POWER DISTRIBUTION BOX
PJ##	PLUG / JACK
PJ##	JACK / PLUG
PJ##	PLUG RIGHT OR UP
PJ##	JACK LEFT OR DOWN
	IN LEFT TOP
	IN BOTH TOP
	OUT RIGHT TOP
	OUT BOTH TOP

MISCELLANEOUS DEVICES

FCN — BELL

FCN — BUZZER

FCN — HORN

V FCN — VOLT METER

A FCN — AMP METER

V OR V — BATTERY

FR## Ω OR FR## Ω — FIXED RESISTOR

Ω OR Ω — VARIABLE RESISTOR

D## OR D## — DIODE

ZD## OR ZD## — ZENER DIODE

??? — CAPACITOR

MISCELLANEOUS DEVICES

SINGLE LINE / CONTROL DIAGRAM	DESCRIPTION:
SPD ???	SUPPRESSOR
	GROUND
RCPT## OR RCPT## ??? ???	RECEPTACLES
LT##	ENCLOSURE LIGHT
	GROUND CHASSIS

CONDUITS & CONDUCTORS

	CONDUCTORS NOT CONNECTED
	CONDUCTORS CONNECTED
	CONDUCTOR SHIELD
	CONDUCTOR SHIELD TWISTED PAIR
	FIELD CONDUCTOR SHIELD
	FIELD CONDUCTOR SHIELD TWISTED PAIR
	EARTH GROUND
	CHASSIS GROUND
	NEUTRAL
	SEPARABLE CONNECTOR SIFICATION SHOWN.

MISCELLANEOUS ELECTRICAL DEVICES

M## CR ### NO ? NC ? ???	MOTOR STARTER COIL
### HP GEN###	MOTOR
OL MTR###	OVERLOAD
##Ω Ω	RESISTOR OR RESISTIVE ELEMENT
HTR### ???	STRIP HEATER OR HEATING ELEMENT
	HIGH VOLTAGE, GROUP OPERATED, AIR BREAK SWITCH * CONTINUOUS AMPERE RATING
MCR## MCR## ??? ???	MOTOR CONTACT: NORMALLY OPEN (NO) NORMALLY CLOSED (NC)
CAP##A ???	KVAR CAP
CAP##C ???	THREE PHASE KVAR

REV	BY	CKD BY	DATE
			-
			-
			-

REVISION: -

NO.: -

SURPRISE ARIZONA

CITY OF SURPRISE
SPA 1 WRF CAPACITY EXP
FACILITY RERATING

WATERWORKS ENGINEERS

ELECTRICAL

SYMBOLS AND LEGENDS 1

CHECKED BGY
DRAWN JJI
DESIGN ER

30% SUBMITTAL

NOT FOR CONSTRUCTION

DATE: JULY 2022
PROJECT NUMBER: 20-018
DRAWING NUMBER: E-00-001
SHEET NO. ###

REUSE OF DOCUMENTS: THIS DOCUMENT, AND THE IDEAS AND DESIGN INCORPORATED HEREIN, AS AN INSTRUMENT OF PROFESSIONAL SEVICE, IS THE PROPERTY OF WATER WORKS ENGINEERS, LLC. AND IS NOT TO BE USED, IN WHOLE OR PART, FOR ANY OTHER PROJECT WITHOUT THE WRITTEN AUTHORIZATION OE WATER WORKS ENGINEERS,LLC.

FILE PATH: File Path

DATE AND TIME: 10/11/2013 3:33:16 PM

SINGLE LINE DIAGRAM SYMBOLS, CONTROL DIAGRAM SYMBOLS, & PLAN VIEW SYMBOLS

FUSES & CIRCUIT BREAKERS

SINGLE LINE OR CONTROL DIAGRAM	PLAN VIEW	DESCRIPTION:
##A ??? ##P CB###		THERMAL MAGNETIC CIRCUIT BREAKER TRIP RATING ABOVE; FRAME RATING BELOW. TYPICAL FOR OTHER TYPES OF BREAKERS. BREAKER TO BE 3 POLE UNLESS NOTED OTHERWISE AS 1P OR 2P
###AT ###AF ### CB### ???	N/A	DRAWOUT MEDIUM VOLTAGE POWER BREAKER UPPER NUMBER INDICATES LONG TIME TRIP SETTING LOWER NUMBER INDICATES BREAKER CONTINUOUS CURRENT RATING
##A ???-### ##P ??? Z		COMBINATION MOTOR STARTER WITH MOTOR CIRCUIT PROTECTOR, MAGNETIC CONTACTOR AND OVERLOAD PROTECTION X= AMPERE SIZE Z= NEMA SIZE
Z		MOTOR STARTER WITH MAGNETIC CONTACTOR AND OVERLOAD PROTECTION Z= NEMA SIZE
FU## ##A	N/A	FUSE
FU## ##A	N/A	FUSED SWITCH

POWER RECEPTACLES

PLAN VIEW	DESCRIPTION:
##A LP-### Y	208V, 3P, 4W, RECEPTACLE ##A = AMPERE RATING AS NOTED LP-##= PANEL BOARD NUMBER Y= CIRCUIT NUMBER
##A LP-### Y	240V, 20, 3W, RECEPTACLE ##A = AMPERE RATING AS NOTED LP-##= PANEL BOARD NUMBER Y= CIRCUIT NUMBER
##A LP-### Y	FLOOR OUTLET BOX WITH TYPE OUTLET INDICATED
##A LP-### Y	480V, 3P, 4W RECEPTACLE AND DISCONNECT SWITCH ##A = AMPERE RATING AS NOTED X = PANEL BOARD NUMBER Y = CIRCUIT NUMBER
##A GFCI WP X Y	DUPLEX RECEPTACLE, 20A, 120V, 2P, 3W UNLESS OTHERWISE NOTED * =C - MOUNTED ABOVE COUNTERTOP GF - GROUND FAULT INTERRUPTER TYPE WP - WEATHERPROOF T - TRANSIENT VOLTAGE SURGE SUPPRESSER X= PANEL BOARD NUMBER Y= CIRCUIT NUMBER
##A LP-### Y	QUAD RECEPTACLE, 20A, 120V, 2P, 3W UNLESS OTHERWISE NOTED NOTATION SAME AS ABOVE

SWITCHES

$a	SINGLE POLE SWITCH "a" INDICATES SWITCH LEG SHALL CONTROL LUMINARIES WITH "a" DESIGNATION
$b 2	DOUBLE POLE SWITCH "b" INDICATES SWITCH LEG SHALL CONTROL LUMINARIES WITH "b" DESIGNATION
$c 3	THREE WAY SWITCH "c" INDICATES SWITCH LEG SHALL CONTROL LUMINARIES WITH "c" DESIGNATION
$d 4	FOUR WAY SWITCH "d" INDICATES SWITCH LEG SHALL CONTROL LUMINARIES "d" DESIGNATION
$M	SINGLE POLE, DOUBLE THROW MOMENTARY CONTACT SWITCH, CENTER OFF
$P	SINGLE POLE SWITCH AND PILOT LIGHT

PUSH POWER EQUIPMENT & DEVICES

SINGLE LINE OR CONTROL DIAGRAM	PLAN VIEW	DESCRIPTION:
???-LCP-### ###V, ###W, ##Ø ???A	LCP-####	LOCAL CONTROL PANEL
???-PP-### ###V, ###W, ##Ø ???A	PP-#### OR PP-####	POWER DISTRIBUTION PANEL BOARD NO. # (480V OR 480/277V) ### = PANEL NAME
DISC# ###AT ###AF	DISC#	NON-FUSIBLE DISCONNECT SWITCH, 600 VOLT, 3 POLE, (###A) AMPERE RATING
##A FU## ##P ???	F DISC###	FUSIBLE DISCONNECT SWITCH, 600 VOLT, 3 POLE, AMPERE RATING AND FUSE SIZE AS NOTED (###A) AMPERE RATING (FU#) FUSE RATING
##A OL ##P MTR###	##P CLR MMS###	MANUAL MOTOR STARTER WITH THERMAL OVERLOAD PROTECTION "CLR" INDICATES WITH PILOT LIGHT "#P" INDICATES NUMBER OF POLES
	N/A	DRAWOUT TYPE EQUIPMENT OR DEVICE
	N/A	MEDIUM VOLTAGE CABLE TERMINATION
TGS### FCN	N/A	MEDIUM VOLTAGE AIR INTERRUPTER SWITCH
#AT XMFR##	N/A	MEDIUM VOLTAGE FUSED MOTOR CONTROLLER #AT = AUTOTRANSFORMER TYPE
M## M WM T##	N/A	METER (M##) PQM - POWER QUALITY METER
### HP GEN###	G	GENERATOR WITH GENERATION NUMBER, RATINGS AND CONNECTIONS AS NOTED IN CALL OUT ON DRAWING
### HP MTR### FCN	MTR	MOTOR, NUMERAL INDICATES HORSEPOWER ASD - ADJUSTABLE SPEED DRIVE VFD - VARIABLE FREQUENCY DRIVE SER - DC SPEED CONTROLLER FVNR - FULL-VOLTAGE NON-REVERSING STARTER
ATS## ??? S O N	ATS-###	AUTOMATIC TRANSFER SWITCH (ATS) "N" INDICATES NORMAL SOURCE "S" INDICATES STANDBY SOURCE #RATE = INDICATES CONTINUOUS CURRENT RATING # = INDICATES ATS NAME
***###	***-###	RVSS - REDUCED VOLTAGE SOFT STARTER FVR - FULL-VOLTAGE REVERSING STARTER 2S - TWO-SPEED STARTER AT - AUTOTRANSFORMER STARTER SMC - SYNCHRONOUS MOTOR CONTROLLER
OL	N/A	OVERLOAD DEVICE
VM### VS VM (*)	N/A	VOLTMETER WITH SWITCH, 3 PHASE (*) = SCALE

PUSH POWER EQUIPMENT & DEVICES (CONT.)

SINGLE LINE OR CONTROL DIAGRAM	PLAN VIEW	DESCRIPTION:
AM### VS AM (*)	N/A	AMMETER WITH SWITCH, 3 PHASE (*) = SCALE
LA## ???	N/A	LIGHTNING ARRESTOR
CR## FCN	N/A	SURGE PROTECTOR
TVSS	TVSS###	TRANSIENT VOLTAGE SURGE SUPPRESSOR (POWER DISTRIBUTION TYPE)
PLT# CLR FNC	N/A	PUSH TO TEST LETTER IS LENS COLOR: R = RED G = GREEN C = CLEAR A = AMBER Y = YELLOW B = BLUE W = WHITE
SOL## FCN	SOV	SOLENOID OPERATED VALVE
ETM	N/A	ELAPSED TIME METER
UH### ##kW	UH###	UNIT HEATER
WH### ##kW	WH###	WATER HEATER
DM-#### ##kW	DM-####	DAMPER MOTOR
LCP MOV ####	MOV	MOTOR OPERATED VALVE "XXXX" DENOTES LOOP NUMBER TO BE OBTAINED FROM INSTRUMENTATION DRAWINGS
		CONTROL STATION
ITP ITP#### FCN	ITP	INTERMEDIATE TERMINAL PANEL
K	N/A	KEY INTERLOCK
K E	N/A	ELECTRONIC KEY INTERLOCK
		CORD AND PLUG CONNECTION
	N/A	THERMOSTAT
	N/A	OCCUPANCY SENSOR
	N/A	PHOTOCELL
	N/A	EMERGENCY SHOWER ALARM STATION
OR	N/A	JUMPER

PUSH POWER EQUIPMENT & DEVICES (CONT.)

SINGLE LINE OR CONTROL DIAGRAM	PLAN VIEW	DESCRIPTION:
MS	$HP	MOTOR SWITCH
N/A	J	JUNCTION BOX
N/A	PB OR PB	PULL BOX
XXX XXX		FIELD MOUNTED INSTRUMENT: XXX= DESIGNATION TO BE OBTAINED FROM INSTRUMENTATION DRAWINGS
N/A	$M	MANUAL MOTOR STARTER WITH OVERLOADS AND COATED DEVICE BOX WITH LOCKABLE EXTERNAL OPERATED HANDLE. 120VAC, 20A, 2P.

FUSES & CIRCUIT BREAKERS

SINGLE LINE / CONTROL DIAGRAM	DESCRIPTION:
XFMR### ##kVA ###A / ###A ##Ø	TRANSFORMER, RATINGS AND CONNECTIONS AS NOTED. UNLESS OTHERWISE NOTED ON THE ONE LINE DIAGRAMS ALL DRY TYPE TRANSFORMERS SERVICING ADMINISTRATIVE AND LABORATORY SPACES SHALL HAVE A K FACTOR OF 13. ALL OTHER DRY TYPE TRANSFORMERS SHALL HAVE A K-4 RATING. ISOLATION TRANSFORMERS SHALL HAVE A K-20 RATING
XFMR### ##kVA ###A / ###A ##Ø	DUAL TRANSFORMER
###A / ###A XF### (*) ???	CURRENT TRANSFORMER *QUANTITY XXXX = PRIMARY AMPERE RATING
###A/###A ??? XF### (*)	POTENTIAL TRANSFORMER (PT) OR CONTROL POWER TRANSFORMER (CPT) (*) QUANTITY XXXX = PRIMARY VOLTAGE RATING
###A / ###A XF### (*) ???	GROUND FAULT CURRENT TRANSFORMER (GFCT) (*) QUANTITY XXXX = PRIMARY VOLTAGE RATING

GROUNDING

PLAN VIEW	DESCRIPTION:
	GROUND ROD
	GROUND ROD IN GROUNDING WELL
	GROUND ROD IN TEST WELL
	GROUND GRID CABLE CONNECTION, WELDED

LIGHTING FIXTURES & EQUIPMENT

PLAN VIEW	DESCRIPTION:
Ca	LIGHTING CONTACTOR WITH NUMBER OF POLES AS INDICATED a-CONTACTOR NUMBER (C1, C2, ETC.)
TM	TIME SWITCH
???-LP-### ###V, ###W, ##Ø ???A LP-#### LP-####	LIGHTING PANEL BOARD NO. # (240/120V OR 208/120V) ### = PANEL NAME
ALCP-#### OR ALCP-####	AREA LIGHTING CONTACTOR PANEL ### = PANEL NAME
XX X Y a NL	TYPICAL LUMINARIES SEE SCHEDULE FOR SPECIFICS "XX"-FIXTURE TYPE X= PANEL BOARD NAME "b"-CONTROLLED BY SWITCH "b" Y= CIRCUIT NUMBER NL= NIGHT LIGHT (UN-SWITCHED)
NL XX X Y a	WALL MOUNTED LUMINARIE.REFER TO SCHEDULE FOR SPECIFICS. (NOTATIONS SAME AS ABOVE)
?? X Y a	DIRECTIONAL FLOOD LIGHT TYPE LUMINARIES. SEE SCHEDULE FOR SPECIFICS. (NOTATIONS SAME AS ABOVE)
?? NL X Y a	LUMINARIES. SEE SCHEDULE FOR SPECIFICS. (NOTATIONS SAME AS ABOVE)
?? NL X	LUMINARIES. SEE SCHEDULE FOR SPECIFICS. (NOTATIONS SAME AS ABOVE)
##-??-###	INDICATES ALL LUMINARIES WITHIN THE ROOM OR AREA IN WHICH THIS NOTATION APPEARS SHALL BE TYPE "A" UNLESS OTHERWISE NOTED. SEE LIGHTING FIXTURE SCHEDULE FOR TYPES
CLR	ALARM BEACON. COLOR AS NOTED. REFER TO SPECIFICATIONS FOR REQUIREMENTS.
E1 X Y	EMERGENCY LUMINARIES WITH BATTERY PACK "E1" FIXTURE TYPE. REFER TO SCHEDULE FOR SPECIFICS. X= PANEL BOARD NAME Y= CIRCUIT NUMBER
E2 REM X Y	REMOTE EMERGENCY LUMINARIES "E2"-FIXTURE TYPE. REFER TO SCHEDULE FOR SPECIFICS
X Y SP XX	CEILING MOUNTED EXIT SIGN "X1" LUMINAIRE TYPE. REFER TO SCHEDULE FOR SPECIFICS LP-##= PANEL BOARD NAME Y= CIRCUIT NUMBER SP= SELF POWERED
XX X Y SP	WALL OUTLET EXIT SIGN. ARROW INDICATES DIRECTION OF EXCESS "X2" LUMINAIRE TYPE. REFER TO SCHEDULE FOR SPECIFICS. LP-## = PANEL BOARD NAME Y= CIRCUIT NUMBER SP= SELF POWERED

FIRE ALARM / LIFE SAFETY

PLAN VIEW	DESCRIPTION:
200 R	FIRE ALARM HEAT DETECTOR 135Y FIXED TEMPERATURE UNLESS OTHER- WISE NOTED. "200" DENOTES 200YF TYPE "R" DENOTES FIXED TEMPERATURE RATE-OF-RISE TYPE.
DSD I	FIRE ALARM DUCT SMOKE DETECTOR PHOTOCELL TYPE UNLESS OTHERWISE NOTED. "I" DENOTES IONIZATION TYPE.
DSD 2	FIRE ALARM DUCT SMOKE DETECTOR
FACP-####	FIRE ALARM CONTROL PANEL
FAVP-####	FIRE ALARM VENTILATION PANEL (WITH GRAPHIC PANEI
FARAP-####	FIRE ALARM REMOTE ANNUNCIATOR
M WP	FIRE ALARM MANUAL PULL STATION, MOUNT UP 4'-0" WP DENOTES WEATHERPROOF COVER
F	OUTDOOR WEATHERPROOF FIRE ALARM MASTER BOX
F	WP FIRE ALARM SPEAKER, MOUNT UP 7'-8"
S	FIRE ALARM STROBE, WALL MOUNT UP 6'-8" OR AT CEILING
F	FIRE ALARM HORN AND STROBE LIGHT COMBINATION, MOUNT UP 6'-8"
F	FIRE ALARM HORN AND STROBE LIGHT COMBINATION, CEILING MOUNT
	SPRINKLER VALVE SUPERVISORY SWITCH
F	FIRE ALARM BELL
STB ???	WEATHERPROOF HIGH DENSITY FIRE ALARM STROBE LIGHT
	SPRINKLER FLOW ALARM SWITCH
CM	ADDRESSABLE CONTROL MODULE
MM	ADDRESSABLE MONITOR MODULE
SD	SMOKE DETECTOR

REV	BY	CKD BY	DATE

REVISION

NO.

SURPRISE ARIZONA

CITY OF SURPRISE
SPA 1 WRF CAPACITY EXP
FACILITY RERATING

WATERWORKS ENGINEERS

30% SUBMITTAL

NOT FOR CONSTRUCTION

ELECTRICAL

SYMBOLS AND LEGENDS 2

CHECKED BGY

DRAWN JJI

DESIGN ER

DATE JULY 2022

PROJECT NUMBER 20-018

DRAWING NUMBER E-00-002

SHEET NO. ###

REUSE OF DOCUMENTS: THIS DOCUMENT, AND THE IDEAS AND DESIGN INCORPORATED HEREIN, AS AN INSTRUMENT OF PROFESSIONAL SEVICE, IS THE PROPERTY OF WATER WORKS ENGINEERS, LLC. AND IS NOT TO BE USED, IN WHOLE OR PART, FOR ANY OTHER PROJECT WITHOUT THE WRITTEN AUTHORIZATION OE WATER WORKS ENGINEERS,LLC.

FILE PATH: File Path

DATE AND TIME: 10/11/2013 3:33:16 PM

PLAN VIEW SYMBOLS & GENERAL NOTES

PUSH POWER EQUIPMENT & DEVICES

PLAN VIEW	DESCRIPTION:
	EXPOSED CONDUIT
	HIDDEN / CONCEALED CONDUIT
UGE — UGE	UNDERGROUND CONDUIT
EDB — EDB	DUCT BANK
OHE — OHE	OVERHEAD POWER LINES
GND — GND	GROUNDING CONDUCTOR
	CONDUITS TURNED DOWN
	CONDUITS TURNED UP
	CONDUIT STUBBED OUT AND CAPPED
	FLEXIBLE CONDUIT OR MANUFACTURER'S CABLE(S)
	FLEXIBLE CONDUIT OR MANUFACTURER'S CABLE(S)
(2)-3"C, 3-#3/0, 1-#2G	DENOTES A QUANTITY OF TWO (2) 3-INCH CONDUITS EACH CONTAINING THREE NO. 3/0 AWG CONDUCTORS AND 1 NO. 2 AWG GROUND CONDUCTOR
2 PR #16 TWSH	DENOTES A QUANTITY OF TWO INSTRUMENT CABLES. EACH CABLE TO CONSIST OF TWO NO. 16 AWG CONDUCTORS TWISTED TOGETHER AND COVERED WITH A METALLIC SHIELD AND AN OVERALL PROTECTIVE JACKET. REFER TO THE SPECIFICATIONS FOR THE EXACT CABLE TO BE PROVIDED.
2 TR #16 TWSH	SAME AS ABOVE EXCEPT CABLE TO CONSIST OF THREE NO. 16 AWG CONDUCTORS TWISTED, SHIELDED AND COVERED WITH AN OVERALL PROTECTIVE JACKET. REFER TO THE SPECIFICATIONS FOR THE EXACT CABLE TO BE PROVIDED.
2 PR #16 TW	DENOTES A QUANTITY OF TWO INSTRUMENT CABLES. EACH CABLE TO CONSIST OF TWO NO. 16 AWG CONDUCTORS TWISTED TOGETHER AND AN OVERALL PROTECTIVE JACKET. REFER TO THE SPECIFICATIONS FOR THE EXACT CABLE TO BE PROVIDED.
(3)-4"C	THREE 4-INCH CONDUITS

AREA CLASSIFICATION

PLAN VIEW	DESCRIPTION:
DAMP	INDICATES THAT ALL ELECTRICAL EQUIPMENT AND MATERIALS INSTALLED WITHIN THE ROOM OR AREA IN WHICH THIS NOTATION APPEARS SHALL BE OF NEMA 12 CONSTRUCTION (OR GASKETED AND SUITABLE FOR USE IS A WET LOCATION WHERE NEMA STANDARDS DO NOT APPLY) UNLESS OTHERWISE NOTED.
WET	INDICATES THAT ALL ELECTRICAL EQUIPMENT AND MATERIALS INSTALLED WITHIN THE ROOM OR AREA IN WHICH THIS NOTATION APPEARS SHALL BE OF NEMA 4X CONSTRUCTION (OR GASKETED AND SUITABLE FOR USE IN A WET LOCATION WHERE NEMA STANDARDS DO NOT APPLY) UNLESS OTHERWISE NOTED.
CORROSIVE	INDICATES THAT ALL ELECTRICAL EQUIPMENT AND MATERIALS INSTALLED WITHIN THE ROOM OR AREA IN WHICH THIS NOTATION APPEARS SHALL BE OF NEMA 4X CONSTRUCTION (OR GASKETED AND SUITABLE FOR USE IN A WET LOCATION WHERE NEMA STANDARDS DO NOT APPLY) UNLESS OTHERWISE NOTED.
CLASS 1, DIV. 1 GROUP D	INDICATES THAT ALL ELECTRICAL EQUIPMENT AND MATERIALS INSTALLED WITHIN THE ROOM OR AREA IN WHICH THIS NOTATION APPEARS SHALL CONFORM TO N.E.C. REQUIREMENTS FOR THE HAZARDOUS AREA CLASSIFICATION SHOWN.

TELECOMMUNICATION SYSTEM

PLAN VIEW	DESCRIPTION:
TTB	TELEPHONE TERMINAL BOARD 4FT X 8FT X 3/4 INCH UNLESS NOTED OTHERWISE
	TELEPHONE OUTLET, WALL TYPE (MOUNT 1'-6" AFF UNO)
	TELEPHONE OUTLET AND FLOOR BOX
	TELEPHONE/DATA OUTLET, WALL TYPE (MOUNT 1'-6" AFF UNO)
	TELEPHONE/DATA OUTLET AND FLOOR BOX
C C1	PAGING SPEAKER, WALL MOUNTED "H1" AND "C1" DENOTES TYPE. H=HORNC=CONE
H H2 H H1	PAGING SPEAKER, WALL MOUNTED, BIDIRECTIONAL NOTATIONS SAME AS ABOVE
C C2	PAGING SPEAKER, FLUSH MOUNTED CEILING TYPE
S	PAGING STATION, SURFACE MOUNTED
VC	REMOTE WALL MOUNTED VOLUME CONTROL. FOR CEILING SPEAKER (MOUNT UP 5'-0" AFF UNO)
A	PAGING SPEAKER AMPLIFIER ASSEMBLY

SECUTITY SYSTEM

KP	SECURITY SYSTEM KEY PAD
CR	SECURITY SYSTEM CARD ACCESS READER
MD	SECURITY ALARM MOTION DETECTOR
CCTV	CLOSED CIRCUIT TV CAMERA

GENERAL NOTES:

NO.	REVISION	REV BY	CKD BY	DATE
-	-	-	-	-

SURPRISE ARIZONA

CITY OF SURPRISE
SPA 1 WRF CAPACITY EXP
FACILITY RERATING

WATERWORKS ENGINEERS

30% SUBMITTAL

NOT FOR CONSTRUCTION

ELECTRICAL

SYMBOLS AND LEGENDS 3

DESIGN ER | DRAWN JJI | CHECKED BGY

DATE: JULY 2022

PROJECT NUMBER: 20-018

DRAWING NUMBER: E-00-003

SHEET NO. ###

REUSE OF DOCUMENTS: THIS DOCUMENT, AND THE IDEAS AND DESIGN INCORPORATED HEREIN, AS AN INSTRUMENT OF PROFESSIONAL SEVICE, IS THE PROPERTY OF WATER WORKS ENGINEERS, LLC. AND IS NOT TO BE USED, IN WHOLE OR PART, FOR ANY OTHER PROJECT WITHOUT THE WRITTEN AUTHORIZATION OE WATER WORKS ENGINEERS,LLC.

FILE PATH: File Path

DATE AND TIME: 10/11/2013 3:33:16 PM

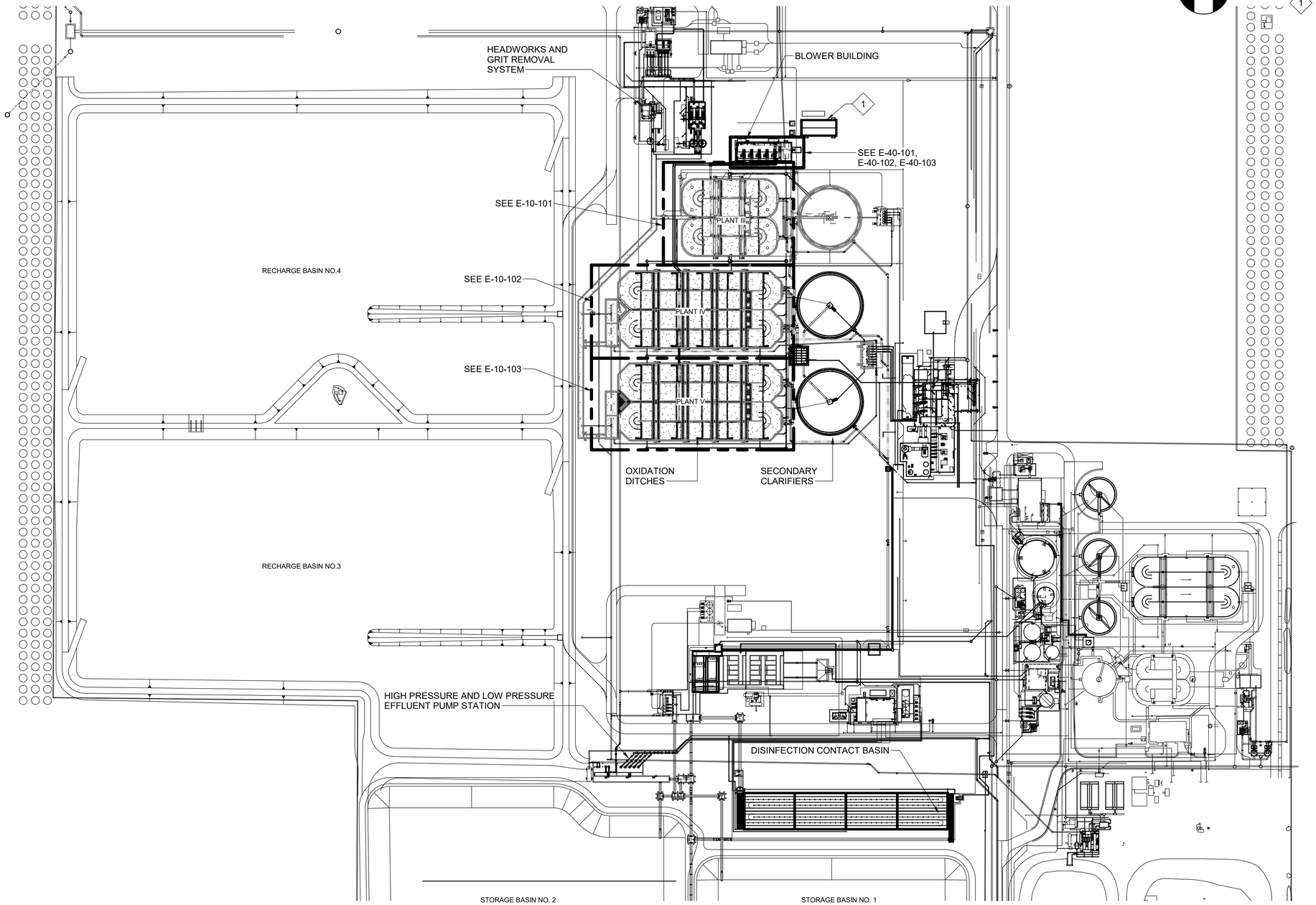

PLAN
1" = 100'-0"

NO.	REVISION	REV BY	CKD BY	DATE
-	-	-	-	-

SURPRISE
ARIZONA

CITY OF SURPRISE

WATER WORKS ENGINEERS

30% SUBMITTAL

NOT FOR CONSTRUCTION

ELECTRICAL

ELECTRICAL SITE PLAN

CHECKED BGY
DRAWN JJI
DESIGN ER

DATE
JULY 2022
PROJECT NUMBER
20-018
DRAWING NUMBER
E-00-101
SHEET NO.

REUSE OF DOCUMENTS: THIS DOCUMENT, AND THE IDEAS AND DESIGN INCORPORATED HEREIN, AS AN INSTRUMENT OF PROFESSIONAL SEVICE, IS THE PROPERTY OF WATER WORKS ENGINEERS, LLC. AND IS NOT TO BE USED, IN WHOLE OR PART, FOR ANY OTHER PROJECT WITHOUT THE WRITTEN AUTHORIZATION OE WATER WORKS ENGINEERS,LLC.

FILE PATH: BIM 360://20-018 SPA 1 WRF Capacity Exp Facility Rerating/2018D-E-Blower Building.rvt

DATE AND TIME: 7/26/2022 3:22:33 PM

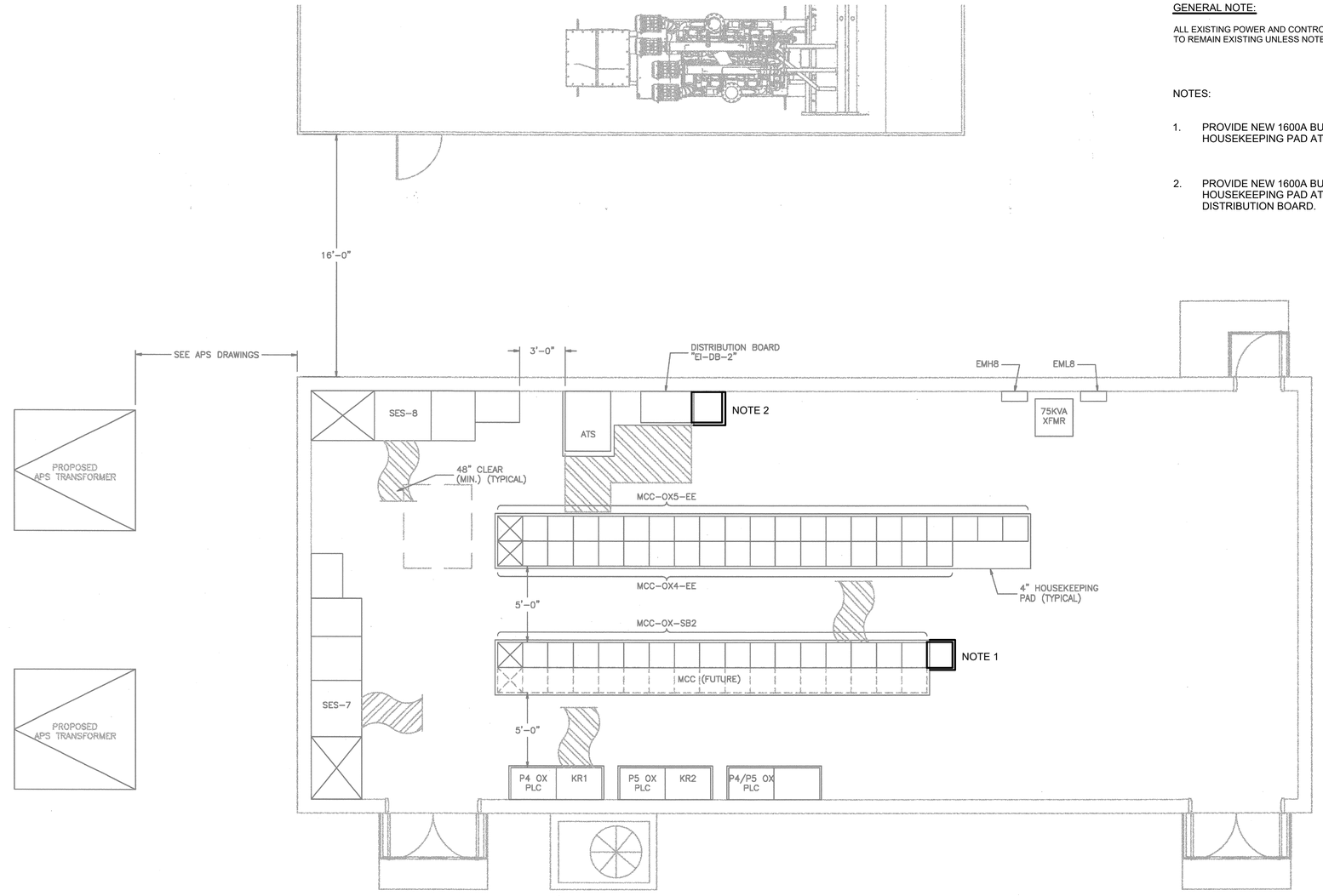

OXIDATION BUILDING EQUIPMENT PLAN

1/4"=1'-0"

GENERAL NOTE:

ALL EXISTING POWER AND CONTROL EQUIPMENT SHOWN ARE TO REMAIN EXISTING UNLESS NOTED OTHERWISE.

NOTES:

1. PROVIDE NEW 1600A BUS SECTION AND HOUSEKEEPING PAD AT EXSTING MCC.
2. PROVIDE NEW 1600A BUS SECTION AND HOUSEKEEPING PAD AT EXISTING DISTRIBUTION BOARD.

NORTH

4 0 4 8

1/4" = 1'-0"

30% SUBMITTAL

NOT FOR CONSTRUCTION

NO.	REVISION	REV BY	CKD BY	DATE
-	-	-	-	-

SURPRISE ARIZONA

CITY OF SURPRISE
SPA 1 WRF CAPACITY EXP
FACILITY RERATING

WATER WORKS ENGINEERS

ELECTRICAL

PLANTS IV & V
ELECTRICAL ROOM
NEW WORK

DESIGN ER | DRAWN CAY | CHECKED BGY

DATE JULY 2022

PROJECT NUMBER 20-018

DRAWING NUMBER E-00-101A

SHEET NO. ###

REUSE OF DOCUMENTS: THIS DOCUMENT, AND THE IDEAS AND DESIGN INCORPORATED HEREIN, AS AN INSTRUMENT OF PROFESSIONAL SEVICE, IS THE PROPERTY OF WATER WORKS ENGINEERS, LLC. AND IS NOT TO BE USED, IN WHOLE OR PART, FOR ANY OTHER PROJECT WITHOUT THE WRITTEN AUTHORIZATION OE WATER WORKS ENGINEERS,LLC.

FILE PATH:C:\USERS\EDGARR\ACCDOCS\WATER WORKS ENGINEERS\20-018 SPA 1 WRF CAPACITY EXP FACILITY RERATING\PROJECT FILES\DRAWINGS\2018D-E-00-101A.DWG

DATE AND TIME: 8/12/2022 3:22:10 PM

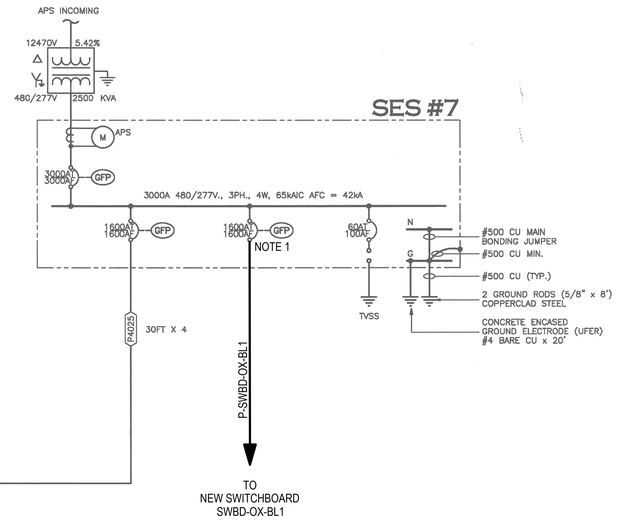

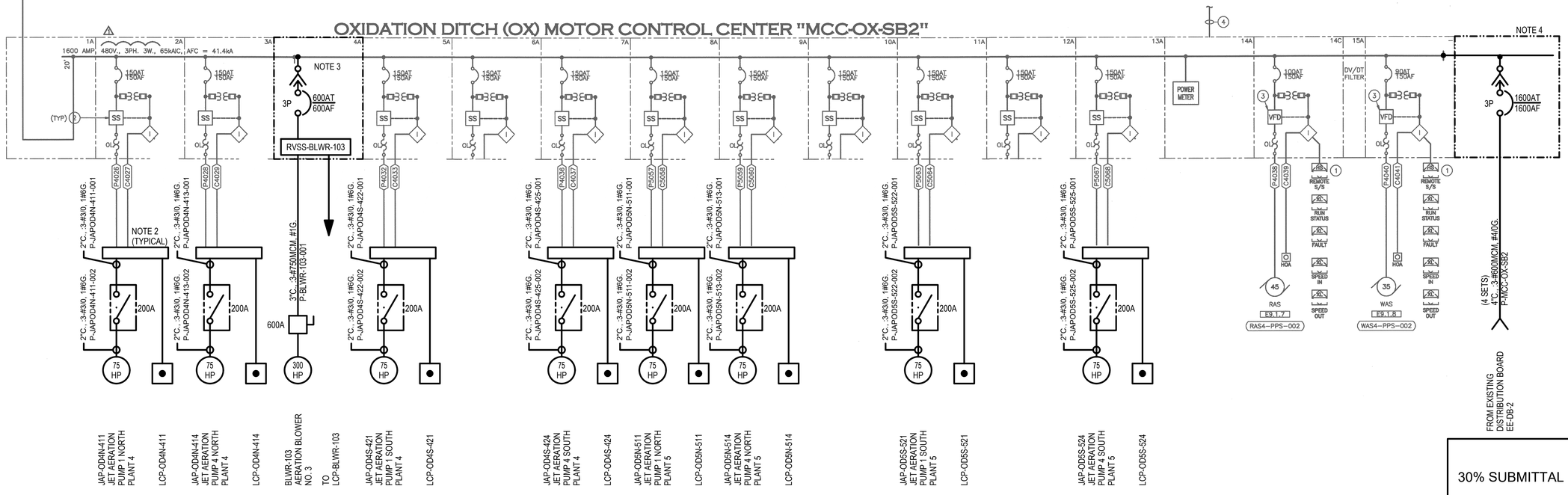

1 EXISTING MCC-OX-SB2 ONE-LINE DIAGRAM - NEW WORK

\- SCALE: NONE

GENERAL NOTE:

ALL EXISTING EQUIPMENT, FEEDERS, AND GROUNDING SYSTEM SHOWN ON THIS ONE-LINE ARE TO REMAIN EXISTING UNLESS NOTED OTHERWISE.

NOTES:

1. CONTRACTOR TO RE-USE EXISTING CIRCUIT BREAKER AT SES #7 FOR NEW POWER FEED TO NEW SWITCHBOARD. CONTRACTOR TO PROVIDE NEW LABEL AT EXISTING CUBICLE FOR NEW LOAD.
2. PROVIDE NEW 200A RATED LUGS AT EXISTING PULLBOX FOR CIRCUIT CONTINUITY OF EXISTING FEEDERS AND NEW FEEDERS.
3. PROVIDE NEW 600A BREAKER AND REVERSE VOLTAGE SOFT STARTER IN EXISTING MCC BUCKET.
4. PROVIDE NEW 1600A BUS SECTION TO EXISTING MCC. PROVIDE NEW CIRCUIT BREAKER WITH 65kAIC RATING.

NO.	REVISION	REV BY	CKD BY	DATE
-	-	-	-	-

SURPRISE ARIZONA

CITY OF SURPRISE
SPA 1 WRF CAPACITY EXP
FACILITY RERATING

WATERWORKS ENGINEERS

ELECTRICAL

EXISTING MCC-OX-SB2 ONE-LINE DIAGRAM - NEW WORK

DESIGN ER | DRAWN CAY | CHECKED BGY

30% SUBMITTAL

NOT FOR CONSTRUCTION

DATE JULY 2022

PROJECT NUMBER 20-018

DRAWING NUMBER E-00-102

SHEET NO. ###

REUSE OF DOCUMENTS: THIS DOCUMENT, AND THE IDEAS AND DESIGN INCORPORATED HEREIN, AS AN INSTRUMENT OF PROFESSIONAL SEVICE, IS THE PROPERTY OF WATER WORKS ENGINEERS, LLC. AND IS NOT TO BE USED, IN WHOLE OR PART, FOR ANY OTHER PROJECT WITHOUT THE WRITTEN AUTHORIZATION OE WATER WORKS ENGINEERS,LLC.

FILE PATH:C:\USERS\EDGARR\ACCDOCS\WATER WORKS ENGINEERS\20-018 SPA 1 WRF CAPACITY EXP FACILITY RERATING\PROJECT FILES\DRAWINGS\2018D-E-00-102.DWG

DATE AND TIME: 8/12/2022 3:22:10 PM

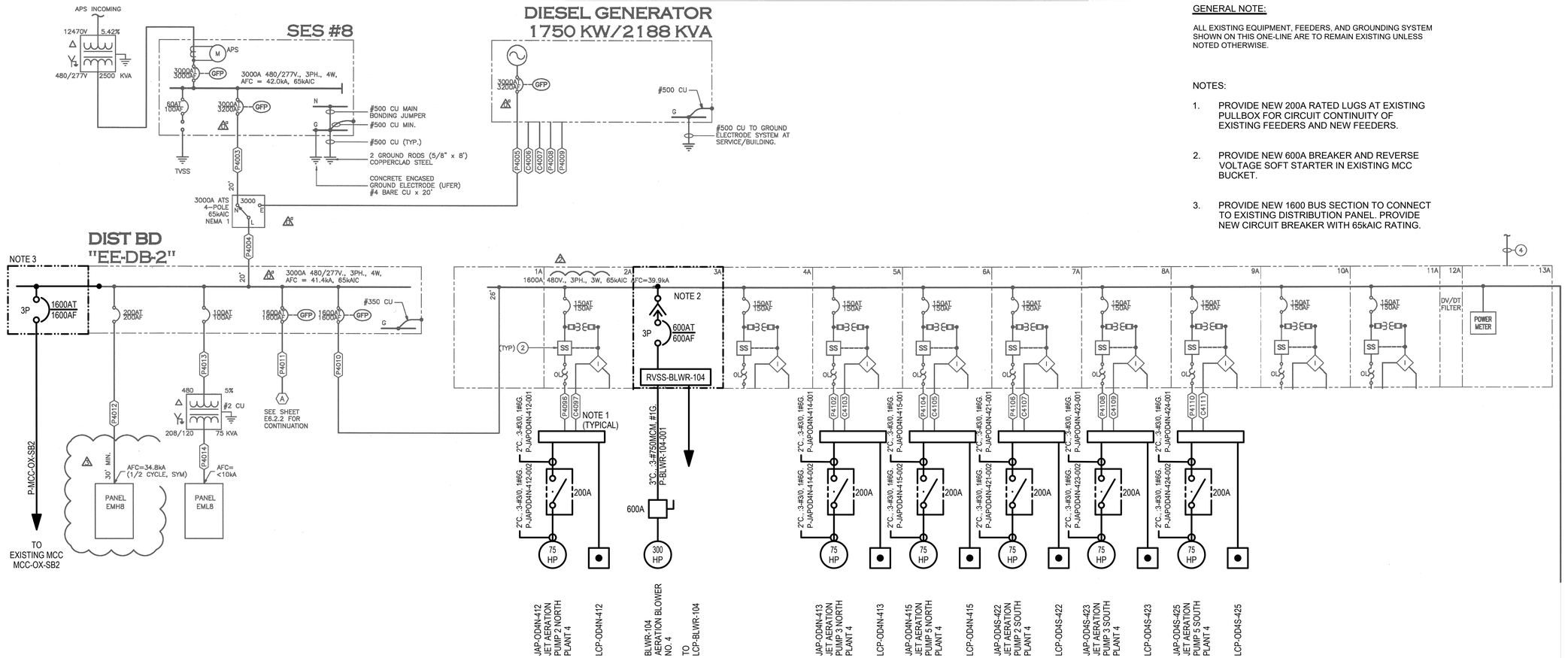

1 EXISTING MCC-OX4-EE ONE-LINE DIAGRAM - NEW WORK

SCALE: NONE

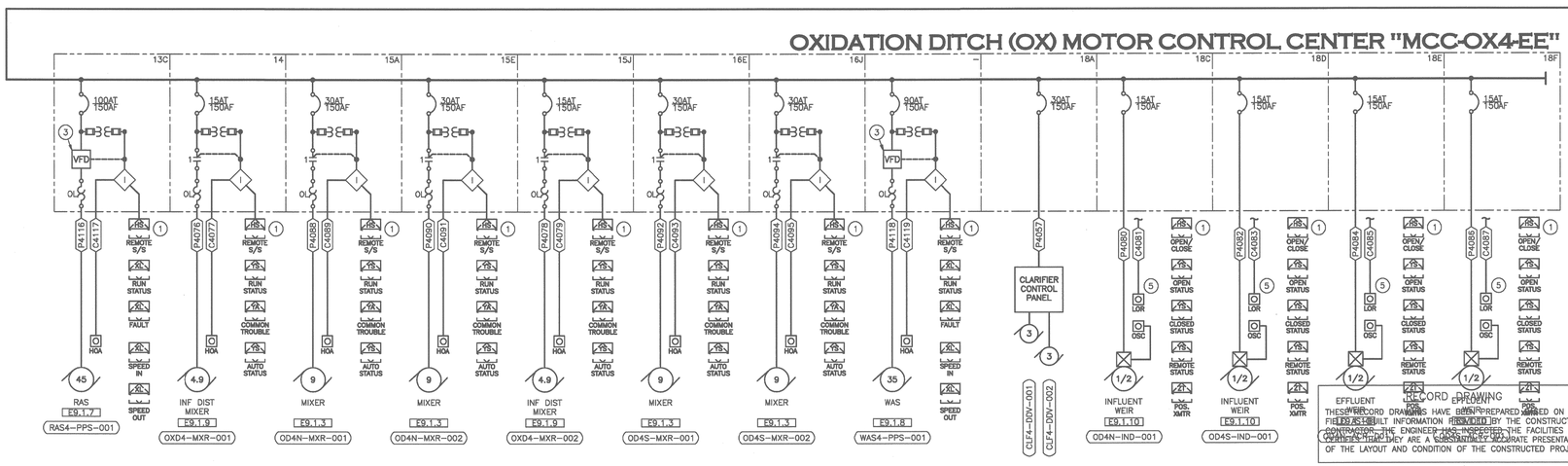

GENERAL NOTE:

ALL EXISTING EQUIPMENT, FEEDERS, AND GROUNDING SYSTEM SHOWN ON THIS ONE-LINE ARE TO REMAIN EXISTING UNLESS NOTED OTHERWISE.

NOTES:

1. PROVIDE NEW 200A RATED LUGS AT EXISTING PULLBOX FOR CIRCUIT CONTINUITY OF EXISTING FEEDERS AND NEW FEEDERS.
2. PROVIDE NEW 600A BREAKER AND REVERSE VOLTAGE SOFT STARTER IN EXISTING MCC BUCKET.
3. PROVIDE NEW 1600 BUS SECTION TO CONNECT TO EXISTING DISTRIBUTION PANEL. PROVIDE NEW CIRCUIT BREAKER WITH 65kAIC RATING.

NO.	REVISION	DATE	BY	CKD BY
1.	CONTRAC BREAKER NEW SWI NEW LABE LOAD.			
2.	PROVIDE PULLBOX EXISTING			
3.	PROVIDE VOLTAGE BUCKET.			

NOTES:

SURPRISE ARIZONA

CITY OF SURPRISE
SPA 1 WRF CAPACITY EXP
FACILITY RERATING

WATERWORKS ENGINEERS

30% SUBMITTAL

NOT FOR CONSTRUCTION

ELECTRICAL

EXISTING MCC-OX4-EE ONE-LINE DIAGRAM - NEW WORK

CHECKED BGY
DRAWN CAY
DESIGN ER

DATE JULY 2022
PROJECT NUMBER 20-018
DRAWING NUMBER E-00-103
SHEET NO. ###

REUSE OF DOCUMENTS: THIS DOCUMENT, AND THE IDEAS AND DESIGN INCORPORATED HEREIN, AS AN INSTRUMENT OF PROFESSIONAL SEVICE, IS THE PROPERTY OF WATER WORKS ENGINEERS, LLC. AND IS NOT TO BE USED, IN WHOLE OR PART, FOR ANY OTHER PROJECT WITHOUT THE WRITTEN AUTHORIZATION OE WATER WORKS ENGINEERS,LLC.

FILE PATH:C:\USERS\EDGARR\ACCDOCS\WATER WORKS ENGINEERS\20-018 SPA 1 WRF CAPACITY EXP FACILITY RERATING\PROJECT FILES\DRAWINGS\2018D-E-00-103.DWG

DATE AND TIME: 8/12/2022 3:22:10 PM

GENERAL NOTE:

ALL EXISTING EQUIPMENT, FEEDERS, AND GROUNDING SYSTEM SHOWN ON THIS ONE-LINE ARE TO REMAIN EXISTING UNLESS NOTED OTHERWISE.

NOTES:

1. PROVIDE NEW 200A RATED LUGS AT EXISTING PULLBOX FOR CIRCUIT CONTINUITY OF EXISTING FEEDERS AND NEW FEEDERS.
2. PROVIDE NEW 600A BREAKER AND REVERSE VOLTAGE SOFT STARTER IN EXISTING MCC BUCKET.

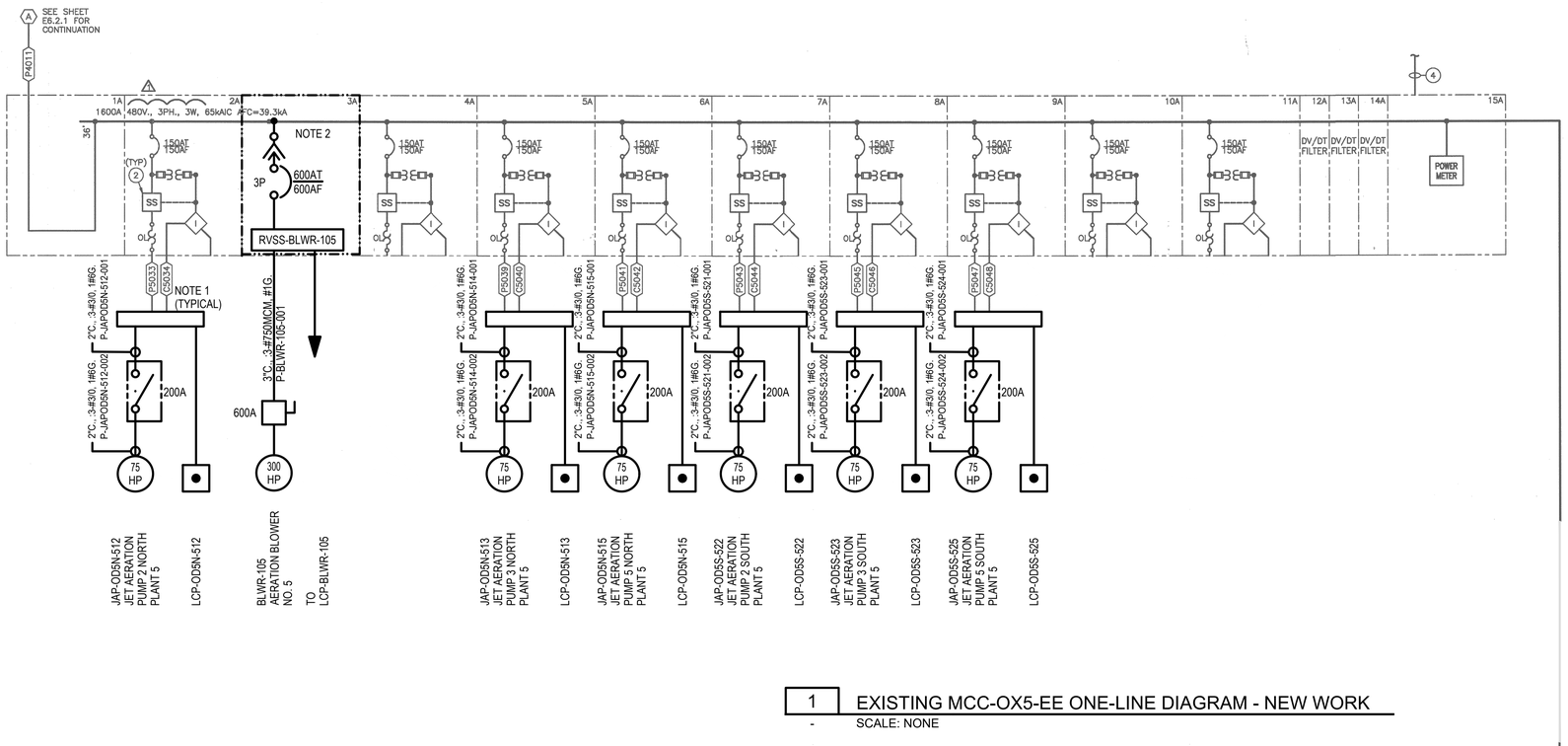

1 EXISTING MCC-OX5-EE ONE-LINE DIAGRAM - NEW WORK

\- SCALE: NONE

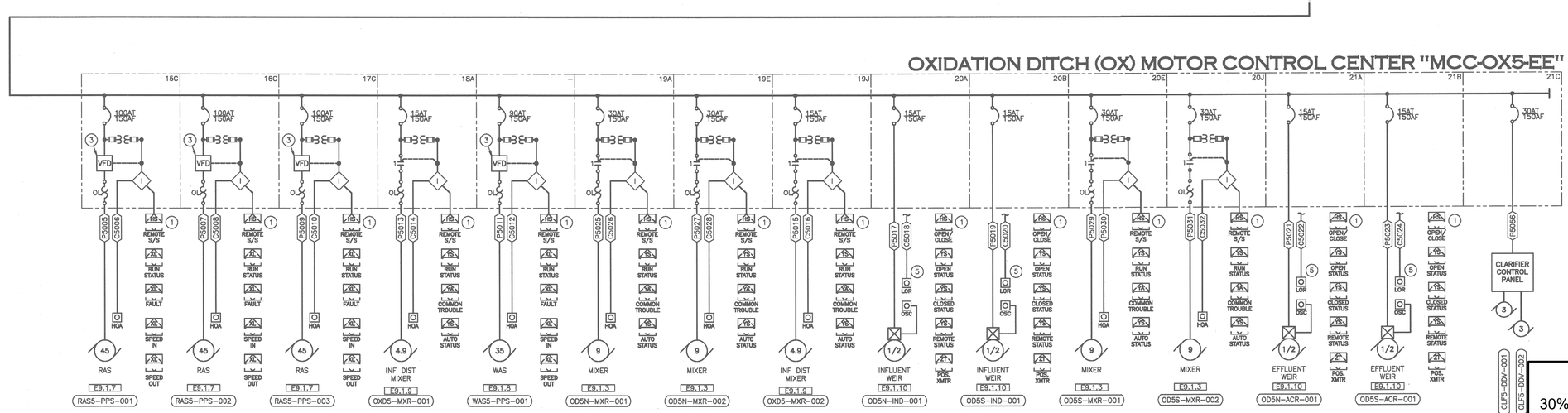

30% SUBMITTAL

NOT FOR CONSTRUCTION

NO.	REVISION	REV BY	CKD BY	DATE
-	-	-	-	-

CITY OF SURPRISE
SPA 1 WRF CAPACITY EXP
FACILITY RERATING

WATER WORKS ENGINEERS

SURPRISE ARIZONA

ELECTRICAL

EXISTING MCC-OX5-EE ONE-LINE DIAGRAM - NEW WORK

CHECKED BGY
DRAWN CAY
DESIGN ER

DATE JULY 2022
PROJECT NUMBER 20-018
DRAWING NUMBER E-00-104
SHEET NO. ###

REUSE OF DOCUMENTS: THIS DOCUMENT, AND THE IDEAS AND DESIGN INCORPORATED HEREIN, AS AN INSTRUMENT OF PROFESSIONAL SEVICE, IS THE PROPERTY OF WATER WORKS ENGINEERS, LLC. AND IS NOT TO BE USED, IN WHOLE OR PART, FOR ANY OTHER PROJECT WITHOUT THE WRITTEN AUTHORIZATION OE WATER WORKS ENGINEERS,LLC.

FILE PATH:C:\USERS\EDGARR\ACCDOCS\WATER WORKS ENGINEERS\20-018 SPA 1 WRF CAPACITY EXP FACILITY RERATING\PROJECT FILES\DRAWINGS\2018D-E-00-104.DWG

DATE AND TIME: 8/12/2022 3:22:10 PM

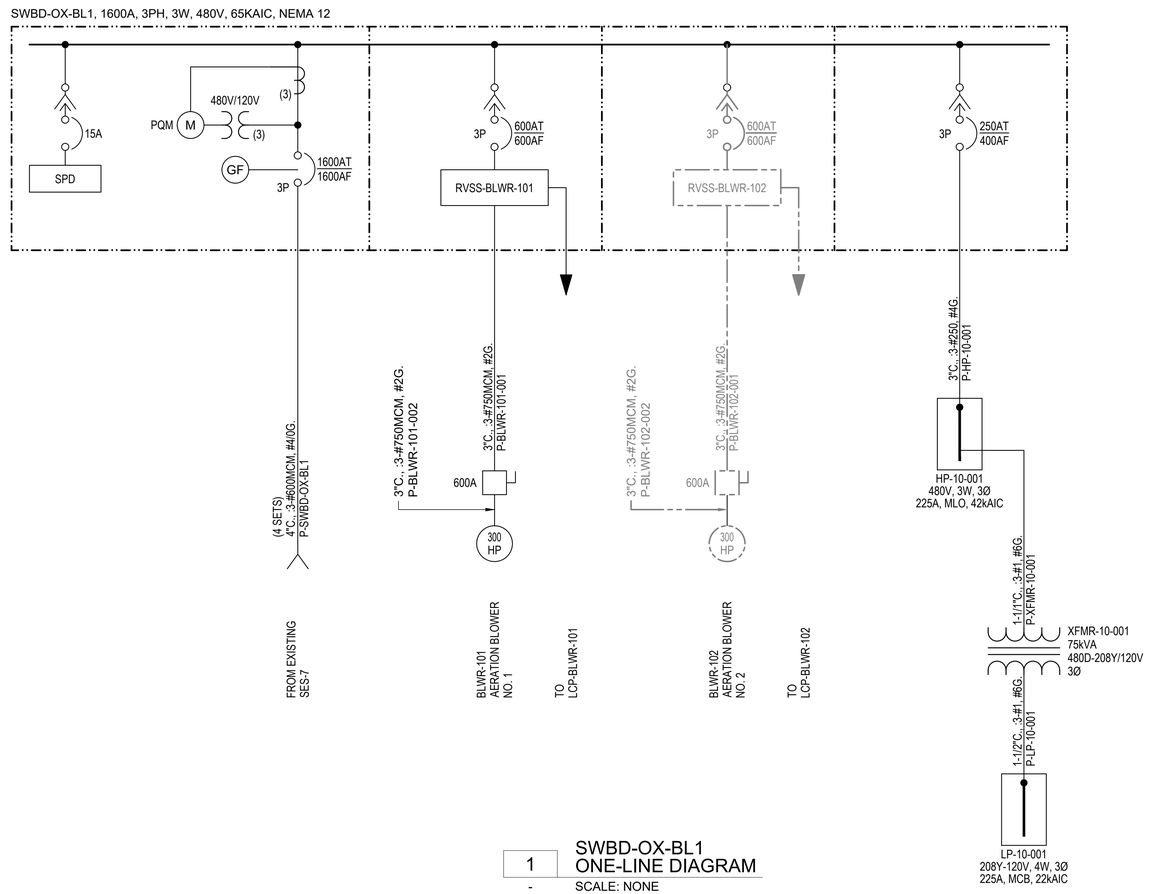

1 SWBD-OX-BL1
ONE-LINE DIAGRAM

\- SCALE: NONE

NO.	REVISION	REV BY	CKD BY	DATE
-	-	-	-	-

SURPRISE
ARIZONA

CITY OF SURPRISE
SPA 1 WRF CAPACITY EXP
FACILITY RERATING

WATERWORKS ENGINEERS

ELECTRICAL
SWBD-OX-BL1
ONE-LINE DIAGRAM

CHECKED BGY
DRAWN JJI
DESIGN ER

30% SUBMITTAL

NOT FOR CONSTRUCTION

DATE
JULY 2022
PROJECT NUMBER
20-018
DRAWING NUMBER
E-00-105
SHEET NO. ###

REUSE OF DOCUMENTS: THIS DOCUMENT, AND THE IDEAS AND DESIGN INCORPORATED HEREIN, AS AN INSTRUMENT OF PROFESSIONAL SEVICE, IS THE PROPERTY OF WATER WORKS ENGINEERS, LLC. AND IS NOT TO BE USED, IN WHOLE OR PART, FOR ANY OTHER PROJECT WITHOUT THE WRITTEN AUTHORIZATION OE WATER WORKS ENGINEERS,LLC.

FILE PATH: C:\USERS\EDGARR\ACCDOCS\WATER WORKS ENGINEERS\20-018 SPA 1 WRF CAPACITY EXP FACILITY RERATING\PROJECT FILES\DRAWINGS\2018D-E105.DWG

DATE AND TIME: 8/12/2022 3:22:10 PM

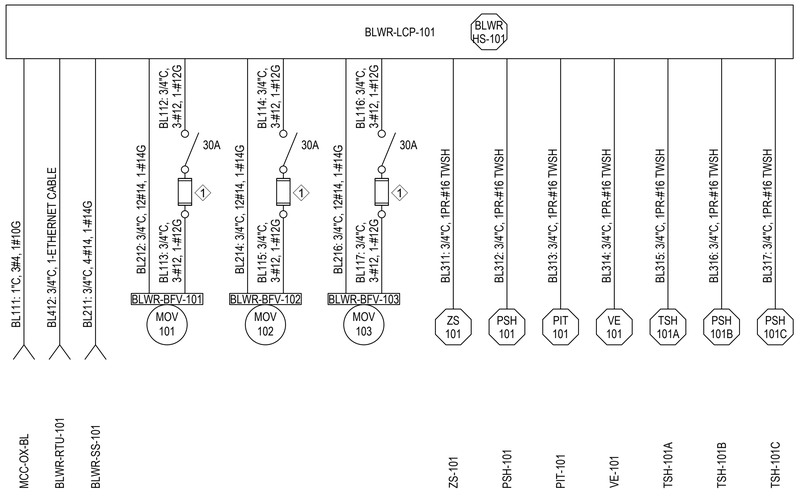

1 BLOWER NO. 1
BLWR-101
- SCALE: NONE

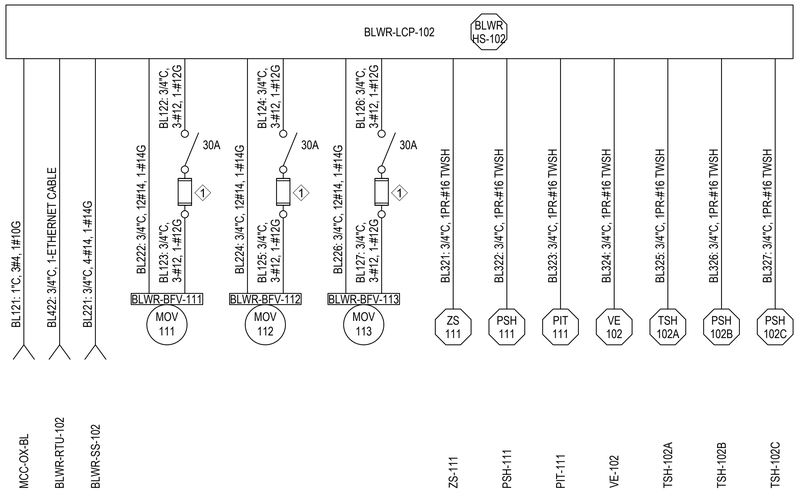

2 BLOWER NO. 2
BLWR-102
- SCALE: NONE

3 BLOWER NO. 3
BLWR-103
- SCALE: NONE

4 BLOWER NO. 4
BLWR-104
- SCALE: NONE

KEY NOTES:

1 PROVIDE FUSES IN ACCORDANCE WITH MOTORIZED VALVE ELECTRIC ACTUATOR MANUFACTURER RECOMMENDATIONS.

NO.	REVISION	REV BY	CKD BY	DATE
-	-	-	-	-

SURPRISE
ARIZONA

CITY OF SURPRISE
SPA 1 WRF CAPACITY EXP
FACILITY RERATING

WATERWORKS ENGINEERS

ELECTRICAL
BLOWER BUILDING
BLOCK DIAGRAM

DESIGN ER | DRAWN JJI | CHECKED BGY

30% SUBMITTAL

NOT FOR CONSTRUCTION

DATE
JULY 2022

PROJECT NUMBER
20-018

DRAWING NUMBER
E-00-106

SHEET NO. ###

REUSE OF DOCUMENTS: THIS DOCUMENT, AND THE IDEAS AND DESIGN INCORPORATED HEREIN, AS AN INSTRUMENT OF PROFESSIONAL SEVICE, IS THE PROPERTY OF WATER WORKS ENGINEERS, LLC. AND IS NOT TO BE USED, IN WHOLE OR PART, FOR ANY OTHER PROJECT WITHOUT THE WRITTEN AUTHORIZATION OE WATER WORKS ENGINEERS,LLC.

FILE PATH:C:\USERS\EDGARR\ACCDOCS\WATER WORKS ENGINEERS\20-018 SPA 1 WRF CAPACITY EXP FACILITY RERATING\PROJECT FILES\DRAWINGS\2018D-E020.DWG

DATE AND TIME: 8/12/2022 3:22:10 PM

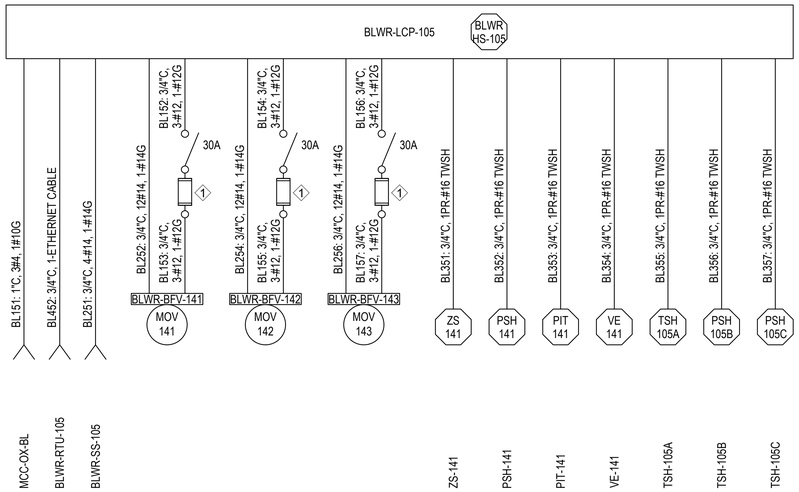

5 BLOWER NO. 5
BLWR-105

\- SCALE: NONE

KEY NOTES:

1. PROVIDE FUSES IN ACCORDANCE WITH MOTORIZED VALVE ELECTRIC ACTUATOR MANUFACTURER RECOMMENDATIONS.

NO.	REVISION	REV BY	CKD BY	DATE
-	-	-	-	-

SURPRISE ARIZONA

CITY OF SURPRISE
SPA 1 WRF CAPACITY EXP
FACILITY RERATING

WATERWORKS ENGINEERS

ELECTRICAL

BLOWER BUILDING
BLOCK DIAGRAM

DESIGN ER | DRAWN JJI | CHECKED BGY

30% SUBMITTAL

NOT FOR CONSTRUCTION

DATE
JULY 2022

PROJECT NUMBER
20-018

DRAWING NUMBER
E-00-107

SHEET NO. ###

REUSE OF DOCUMENTS: THIS DOCUMENT, AND THE IDEAS AND DESIGN INCORPORATED HEREIN, AS AN INSTRUMENT OF PROFESSIONAL SEVICE, IS THE PROPERTY OF WATER WORKS ENGINEERS, LLC. AND IS NOT TO BE USED, IN WHOLE OR PART, FOR ANY OTHER PROJECT WITHOUT THE WRITTEN AUTHORIZATION OE WATER WORKS ENGINEERS,LLC.

FILE PATH:C:\USERS\EDGARR\ACCDOCS\WATER WORKS ENGINEERS\20-018 SPA 1 WRF CAPACITY EXP FACILITY RERATING\PROJECT FILES\DRAWINGS\2018D-E021.DWG

DATE AND TIME: 8/12/2022 3:22:10 PM

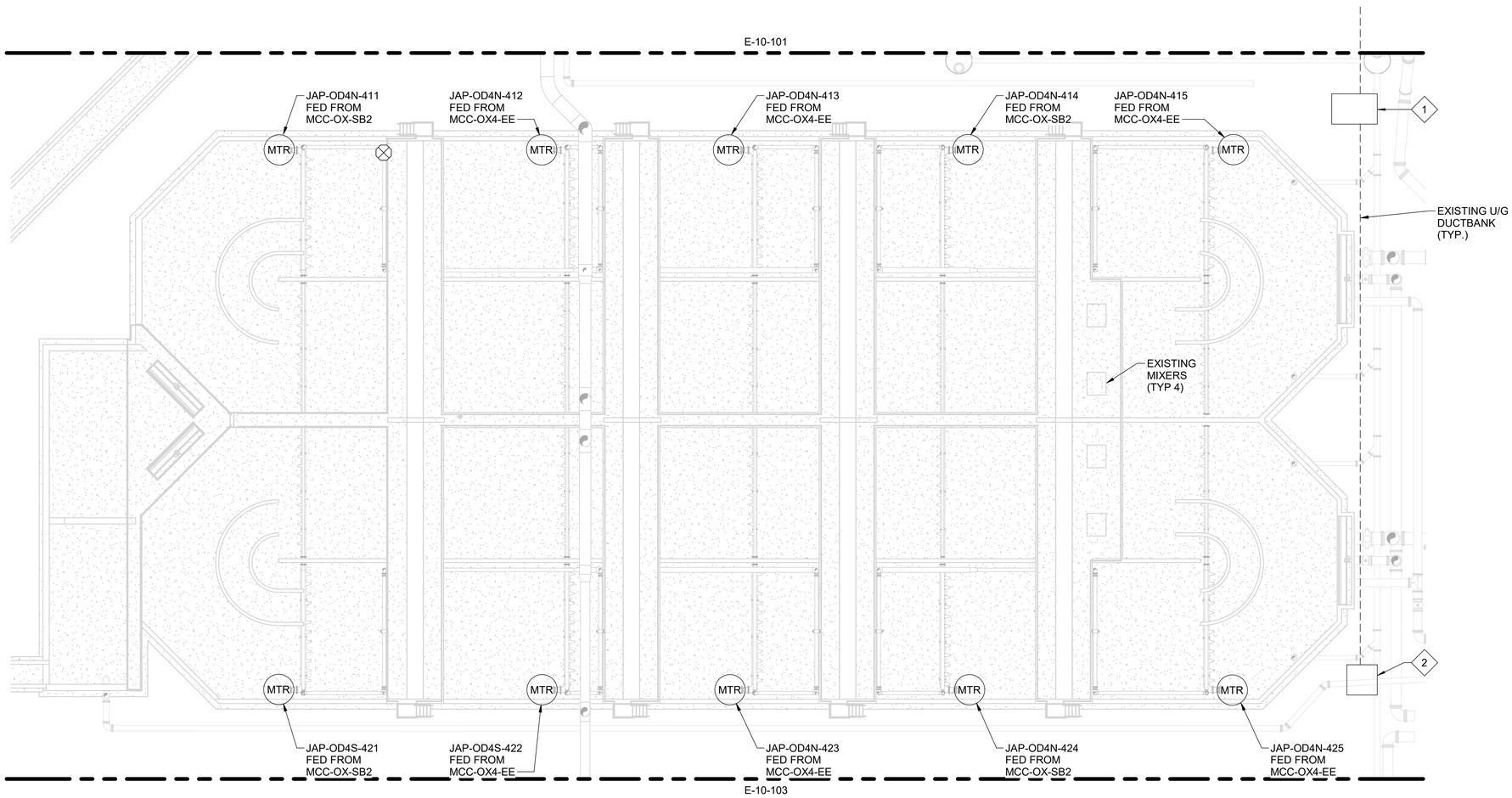

PLAN
1/16" = 1'-0"

NO.	REVISION	REV. BY	CKD BY	DATE
-	-	-	-	-

SURPRISE ARIZONA

CITY OF SURPRISE

WATER WORKS ENGINEERS

30% SUBMITTAL

NOT FOR CONSTRUCTION

ELECTRICAL
PLANT IV OXIDATION DITCH AERATION SYSTEM
PLAN

CHECKED JHM
DRAWN JJI
DESIGN BGY

DATE
JULY 2022

PROJECT NUMBER
20-018

DRAWING NUMBER
E-10-102

SHEET NO.

REUSE OF DOCUMENTS: THIS DOCUMENT, AND THE IDEAS AND DESIGN INCORPORATED HEREIN, AS AN INSTRUMENT OF PROFESSIONAL SEVICE, IS THE PROPERTY OF WATER WORKS ENGINEERS, LLC. AND IS NOT TO BE USED, IN WHOLE OR PART, FOR ANY OTHER PROJECT WITHOUT THE WRITTEN AUTHORIZATION OE WATER WORKS ENGINEERS,LLC.

FILE PATH: BIM 360://20-018 SPA 1 WRF Capacity Exp Facility Rerating/2018D-E-Blower Building.rvt

DATE AND TIME: 8/12/2022 10:30:57 AM

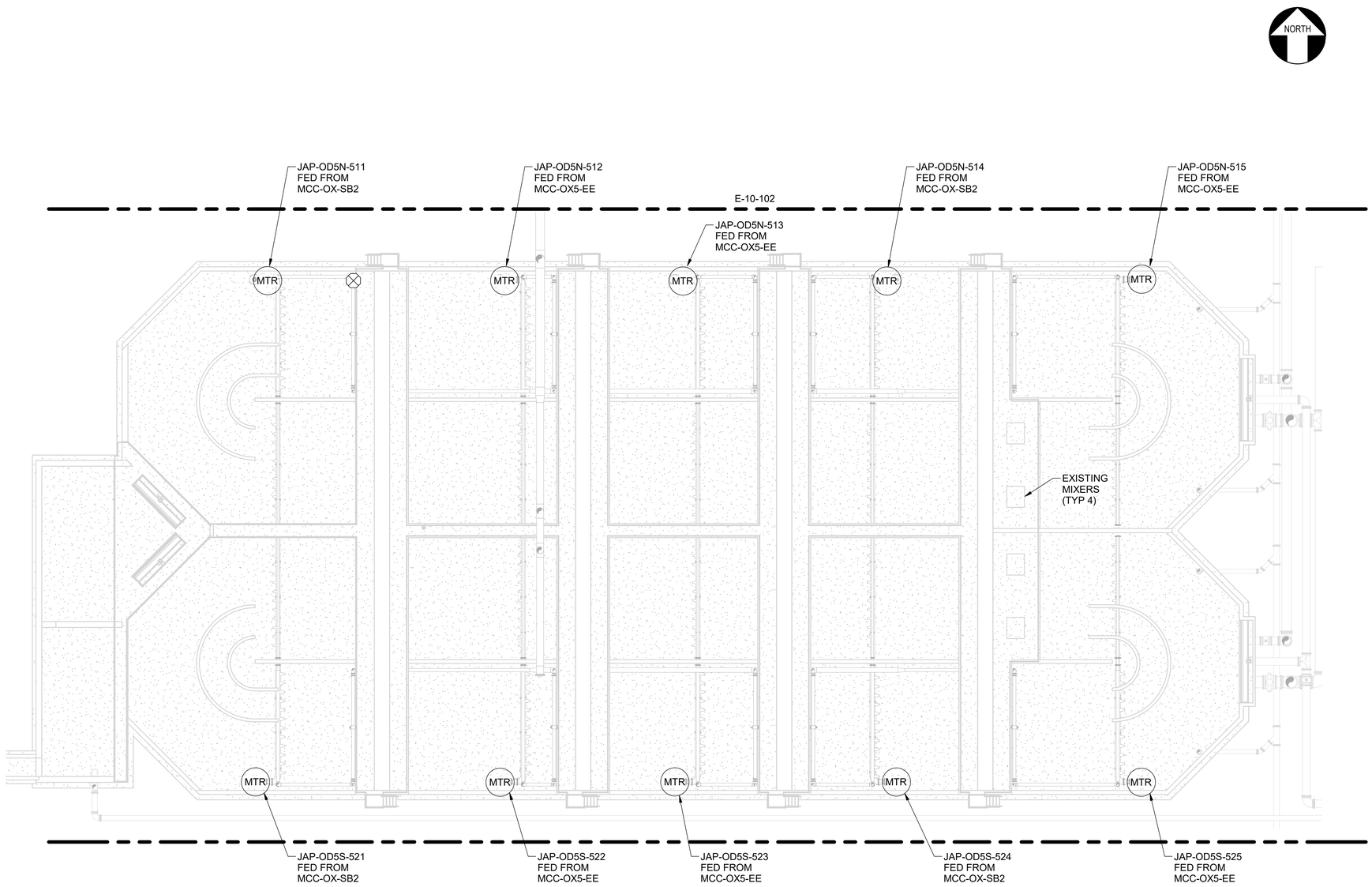

PLAN
1/16" = 1'-0"

NO.	REVISION	REV BY	CKD BY	DATE
-	-	-	-	-

SURPRISE
ARIZONA

CITY OF SURPRISE

WATERWORKS ENGINEERS

ELECTRICAL
PLANT V OXIDATION DITCH AERATION SYSTEM PLAN

CHECKED BGY
DRAWN JJJ
DESIGN LER

30% SUBMITTAL

NOT FOR CONSTRUCTION

DATE: JULY 2022
PROJECT NUMBER 20-018
DRAWING NUMBER E-10-103
SHEET NO.

REUSE OF DOCUMENTS: THIS DOCUMENT, AND THE IDEAS AND DESIGN INCORPORATED HEREIN, AS AN INSTRUMENT OF PROFESSIONAL SEVICE, IS THE PROPERTY OF WATER WORKS ENGINEERS, LLC. AND IS NOT TO BE USED, IN WHOLE OR PART, FOR ANY OTHER PROJECT WITHOUT THE WRITTEN AUTHORIZATION OE WATER WORKS ENGINEERS,LLC.

FILE PATH: BIM 360://20-018 SPA 1 WRF Capacity Exp Facility Rerating/2018D-E-Blower Building.rvt

DATE AND TIME: 8/12/2022 10:38:33 AM

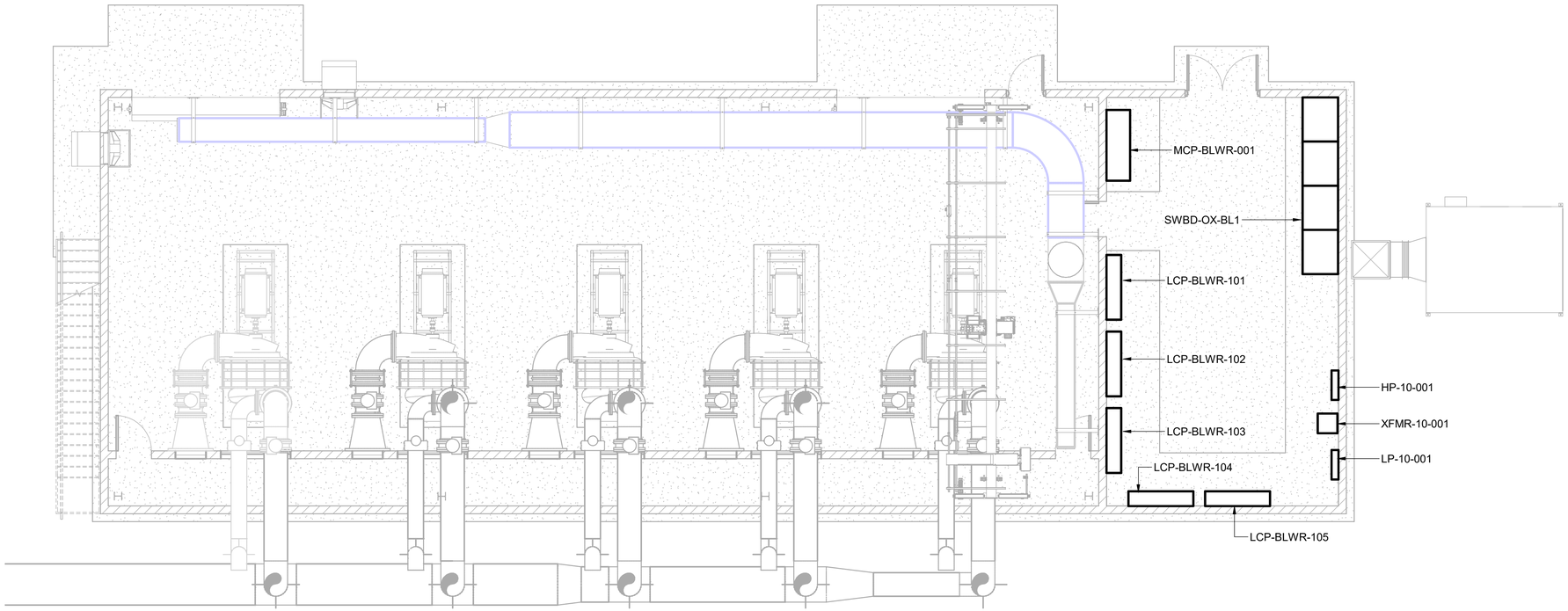

PLAN
3/16"=1'-0"

NO.	REVISION	REV BY	CKD BY	DATE
-	-	-	-	-

SURPRISE
ARIZONA

CITY OF SURPRISE

WATER WORKS ENGINEERS

ELECTRICAL
BLOWER BUILDING POWER PLAN

DESIGN ER | DRAWN JJI | CHECKED BGY

30% SUBMITTAL

NOT FOR CONSTRUCTION

DATE
JULY 2022

PROJECT NUMBER
20-018

DRAWING NUMBER
E-40-101

SHEET NO.

REUSE OF DOCUMENTS: THIS DOCUMENT, AND THE IDEAS AND DESIGN INCORPORATED HEREIN, AS AN INSTRUMENT OF PROFESSIONAL SEVICE, IS THE PROPERTY OF WATER WORKS ENGINEERS, LLC. AND IS NOT TO BE USED, IN WHOLE OR PART, FOR ANY OTHER PROJECT WITHOUT THE WRITTEN AUTHORIZATION OE WATER WORKS ENGINEERS,LLC.

FILE PATH: BIM 360://20-018 SPA 1 WRF Capacity Exp Facility Rerating/2018D-E-Blower Building.rvt

DATE AND TIME: 8/12/2022 10:15:19 AM

PROCESS LINES

LINE WEIGHT, COLOR & LINE TYPE	DESCRIPTION:
	PRIMARY PROCESS LINE
	PRIMARY PROCESS LINE (DEMO)
	PRIMARY PROCESS LINE (FUTURE)
	PRIMARY PROCESS LINE (EXIST)
	SECONDARY PROCESS LINE
	SECONDARY PROCESS LINE (DEMO)
	SECONDARY PROCESS LINE (FUTURE)
	SECONDARY PROCESS LINE (EXIST)
	AUXILIARY / TERTIARY PROCESS LINE
	AUXILIARY / TERTIARY PROCESS LINE (DEMO)
	AUXILIARY / TERTIARY PROCESS LINE (FUTURE)
	AUXILIARY / TERTIARY PROCESS LINE (EXIST)

PROCESS SYMBOLS

SYMBOL	DESCRIPTION:
	SIGNAL LINE BREAK
	PROCESS LINE BREAK
	BOX INDICATING FUNCTIONAL GROUPS OR EQUIPMENT THAT REPEATS
	ARROW INDICATES DIRECTION OF PROCESS FLOW
	ARROW INDICATES DIRECTION OF SIGNAL FLOW
	SIGNAL CONNECTION POINT
	PROCESS LINES CROSSING (NOT CONNECTED)
	PROCESS LINES CROSSING (CONNECTED)
PIT 100101	PROCESS GOING TO / FROM ANOTHER SHEET (MATCH LETTERS)
	SIGNAL GOING TO ANOTHER SHEET (MATCH NUMBERS)
	PROCESS LINE CONTINUED OUTSIDE SCOPE OF DRAWINGS
	ANALOG SIGNAL IN
	ANALOG SIGNAL OUT
	DISCRETE SIGNAL IN
	DISCRETE SIGNAL OUT
	PULSED SIGNAL IN
	ETHERNET SIGNAL
(SPEC) (SPEC)	PIPE SPEC CHANGE
###V OR ###V	INSTRUMENT POWER SUPPLY
OR	RADIO ANTENNA
	PROTOCOL CONVERTER CABINET
	HUMAN INTERFACE MODULE
	OPEN DRAIN WITHOUT REFERENCED P&ID(S)
	OPEN DRAIN WITH REFERENCED P&ID(S)

INSTRUMENT / SIGNAL LINES

LINE WEIGHT, COLOR & LINE TYPE	DESCRIPTION:
	INSTRUMENT SUPPLY / CONNECTION TO PROCESS
	CAPILLARY SIGNAL
	ELECTRICAL SIGNAL
	ELECTROMAGNETIC / SONIC SIGNAL NON-GUIDED
	SONIC SIGNAL GUIDED
	ETHERNET SIGNAL
	HYDRAULIC SIGNAL
	SERIAL DATA SIGNAL
	MECHANICAL LINK SIGNAL
	PNEUMATIC SIGNAL
	SOFTWARE SIGNAL
	UNIDENTIFIED SIGNAL

ISA INSTRUMENT SYMBOLS & IDENTIFICATION

	FIRST LETTERS		SUCCEEDING LETTERS		
	MEASURE / INITIATING VARIABLE	VARIABLE MODIFIER	READOUT / PASSIVE FUNCTION	OUTPUT / ACTIVE FUNCTION	FUNCTION MODIFIER
A	ANALYSIS		ALARM		
B	BURNER, COMBUSTION		USER'S CHOICE	USER'S CHOICE	USER'S CHOICE
C	USER'S CHOICE			CONTROL	CLOSE
D	USER'S CHOICE	DIFFERENCE, DIFFERENTIAL			DEVIATION
E	VOLTAGE		SENSOR, PRIMARY ELEMENT		
F	FLOW, FLOW RATE	RATIO			
G	USER'S CHOICE		GLASS, GAUGE, VIEWING DEVICE		
H	HAND				HIGH
I	CURRENT		INDICATE		
J	POWER		SCAN		
K	TIME, SCHEDULE	TIME RATE OF CHANGE		CONTROL STATION	
L	LEVEL		LIGHT		LOW
M	MOTOR				MIDDLE, INTERMEDIATE
N	USER'S CHOICE		USER'S CHOICE	USER'S CHOICE	USER'S CHOICE
O	USER'S CHOICE		ORIFICE, RESTRICTION		OPEN
P	PRESSURE		POINT (TEST CONNECTION)		
Q	QUANTITY	INTEGRATE, TOTALIZE	INTEGRATE, TOTALIZE		
R	RADIATION		RECORD		RUN
S	SPEED, FREQUENCY	SAFETY		SWITCH	STOP
T	TEMPERATURE			TRANSMIT	
U	MULTIVARIABLE		MULTIFUNCTION	MULTIFUNCTION	
V	VIBRATION, MECHANICAL ANALYSIS			VALVE, DAMPER, LOUVER	
W	WEIGHT, FORCE		WELL, PROBE		
X	UNCLASSIFIED	X-AXIS	ACCESSORY DEVICE, UNCLASSIFIED	UNCLASSIFIED	UNCLASSIFIED
Y	EVENT, STATE, PRESENCE	Y-AXIS		AUXILIARY DEVICES	
Z	POSITION, DIMENSION	Z-AXIS, SAFETY INSTRUMENTED SYSTEM		DRIVER, ACTUATOR, UNCLASSIFIED FINAL CONTROL ELEMENT	

GENERAL INSTRUMENT & DIGITAL INTERFACE SYMBOLS

	FIELD MOUNTED INSTRUMENT	PANEL MOUNTED INSTRUMENT	MCC MOUNTED INSTRUMENT	INACCESSIBLE INSTRUMENT
DISCRETE INSTRUMENTS	XXX ###	XXX ###	XXX ###	XXX ###
SHARED DISPLAY SHARED CONTROL	XXX ###	XXX ###	XXX ###	XXX ###
COMPUTER FUNCTION	XXX ###	XXX ###	XXX ###	XXX ###
PROGRAMMABLE LOGIC CONTROL	XXX ###	XXX ###	XXX ###	XXX ###

S/S PIT 100101 — INSTRUMENT WITH LONG LOOP NUMBER

PI 300201 PIT 300201 — INSTRUMENTS SHARING A COMMON HOUSING

YL ALM 100215 — PILOT LIGHT PANEL MOUNTED

YL ALM 100201 — PILOT LIGHT FIELD MOUNTED

A 10 — PANEL MOUNTED PATCH BOARD POINT 10

P — PURGE OR FLUSHING DEVICE

R — REST FOR LATCH-TYPE ACTUATOR

I# — UNDEFINED INTERLOCK LOGIC

ULTRASONIC LEVEL INDICATING ELEMENT

RADAR LEVEL INDICATING ELEMENT

INSTRUMENT TAG NUMBERING SYSTEM

INSTRUMENT IDENTIFICATION (REFER TO TABLE RIGHT) { SUCCEEDING LETTER(S), FIRST LETTER(S) }

FIT 08101B

INSTRUMENT ID (ISA STANDARD) — DUPLICATE INSTRUMENT

FIT 001 101 B

PROCESS AREA IDENTIFIER — LOOP NUMBER

ZS 520201

SYSTEM I/O INTERFACE. DIRECTION OF FLOW INDICATES WHETHER IT IS INPUT OR OUTPUT

LETTERS, TAG NUMBERS, ABBREVIATIONS & OTHER ANNOTATIONS ARE SIMILAR TO THE ABOVE INSTRUMENT IDENTIFICATION.

HOA FIT 700201A

INSTRUMENT FUNCTION OR CONTROL DESCRIPTOR

PROCESS AREA NUMBER DESIGNATION — UNIQUE NUMBER

FLT-001-100

EQUIPMENT TYPE

30% SUBMITTAL

NOT FOR CONSTRUCTION

NO.	REVISION	REV BY	CKD BY	DATE
-	-	-	-	-

SURPRISE ARIZONA

CITY OF SURPRISE
SPA 1 WRF CAPACITY EXP
FACILITY RERATING

WATERWORKS ENGINEERS

INSTRUMENTATION

SYMBOLS AND LEGEND 1

CHECKED DB
DRAWN MC
DESIGN JHM

DATE AUGUST 2022
PROJECT NUMBER 20-018
DRAWING NUMBER N-00-001
SHEET NO. -

REUSE OF DOCUMENTS: THIS DOCUMENT, AND THE IDEAS AND DESIGN INCORPORATED HEREIN, AS AN INSTRUMENT OF PROFESSIONAL SEVICE, IS THE PROPERTY OF WATER WORKS ENGINEERS, LLC. AND IS NOT TO BE USED, IN WHOLE OR PART, FOR ANY OTHER PROJECT WITHOUT THE WRITTEN AUTHORIZATION OE WATER WORKS ENGINEERS,LLC.

FILE PATH: File Path

DATE AND TIME: 10/11/2013 3:33:16 PM

PROCESS VALVES

SYMBOL	DESCRIPTION:
	AIR RELIEF VALVE (ARV)
	AIR / VACUUM VALVE (AVV)
	ANGLE VALVE (AV)
	BACKFLOW PREVENTION VALVE (BFP)
	BALL VALVE (BAV)
	BALL VALVE (BFV)
	CHECK VALVE, BALL (CKV)
	CHECK VALVE, DOUBLE DISK (CKV)
	CHECK VALVE, DUCK BILL (CKV)
	CHECK VALVE, FLAP GATE (CKV)
	CHECK VALVE, SPRING (CKV)
	CHECK VALVE, STOP (CKV)
	CHECK VALVE, SWING (CKV)
	COMBINATION AIR VALVE (CAV)
	DIAPHRAGM VALVE (DIA)
	DIVERTER VALVE (DIV)
	FOUR-WAY VALVE (MPV)
	FOUR-WAY FIVE PORT VALVE (MPV)
	FIRE HYDRANT (FH)
	GATE VALVE (GAV)
	GLOBE VALVE (GLV)
	HOSE BIB VALVE (HSV)
	MUD VALVE (MV)
	NEEDLE VALVE (NV)
	PINCH VALVE (PV)
	PLUG VALVE (PLV)
	ROTARY VALVE (RTV)
	RUPTURE DISK, PRESSURE (RDP)
	RUPTURE DISK, VACUUM (RDV)
	SLIDE / KNIFE GATE VALVE (SLG)
	STOP LOG (SL)
	THREE-WAY VALVE (MPV)
	WEIR (WR)

NC
BAV-999-999

NOTE:
VALVES POSITIONS SHALL BE NORMALLY OPEN OR AUTOMATICALLY CONTROLLED UNLESS OTHERWISE NOTED AS NORMALLY CLOSED (NC).

CONTROL VALVES

SYMBOL	DESCRIPTION:
	BACK PRESSURE REGULATOR SELF CONTAINED (BPRS)
	BACK PRESSURE REGULATOR WITH EXTERNAL PRESSURE TAP (BPRE)
S	COMBINATION BACK PRESSURE AND SOLENOID SHUT-OFF VALVE (CBPS)
	DIFFERENTIAL PRESSURE REDUCING REGULATOR (DPRR)
	PRESSURE REDUCING REGULATOR (PRR)
	PRESSURE REDUCING REGULATOR WITH EXTERNAL TAP (RRE)
	PRESSURE REDUCING REGULATOR WITH INTEGRAL OUTLET (RRI)
	PRESSURE RELIEF VALVE (PRV)
	PRESSURE & VACUUM RELIEF VALVE (PRV)
	SAFETY VALVE (SV)
P	PILOT OPERATED RELIEF VALVE (POR)
S	PRESSURE RELIEF WITH SOLENOID (PRV)
	PRESSURE RELIEF & PRESSURE SUSTAINING VALVE (PRPS)
	PRESSURE RELIEF AND SURGE ANTICIPATOR VALVE (PRSA)

SAFETY VALVES

SYMBOL	DESCRIPTION:
	PRESSURE SAFETY VALVE (SAV)
	TEMPERATURE SAFETY VALVE (SAV)
	VACUUM SAFETY VALVE (SAV)

ACTUATORS

SYMBOL	DESCRIPTION:
	PISTON ACTUATOR (PVA)
	DIAPHRAGM ACTUATOR (DVA) OC = OPEN / CLOSE MOD = MODULATING
	DIAPHRAGM SPRING (DAS)
D	DIGITAL ACTUATOR (DIG)
E/H	ELECTRO-HYDRAULIC ACTUATOR (EHVA)
	MANUAL / HAND WHEEL ACTUATOR (HAV)
	PRESSURE BALANCED DIAPHRAGM ACTUATOR (PBD)
M	ROTARY MOTOR ACTUATOR (MOV)
S	SOLENOID ACTUATOR (SOL) FO = FAIL OPEN FC = FAIL CLOSE FL = FAIL LAST POSITION
S	SOLENOID MANUAL RESET (SOL)
S	SOLENOID REMOTE RESET (SOL)
	SPRING ACTUATOR (SVA)
	THROTTLING ACTUATOR (TVA)

PROCESS FITTINGS & DEVICES

SYMBOL	DESCRIPTION:
	BASIN NOZZLE MANIFOLD
	BLIND FLANGE
	CAP
	CLEAN OUT
	CONE STRAINER
	DAMPER
	DIFFUSER
	DOUBLE CONTAINMENT PIPE
	DUPLEX STRAINER
	EJECTOR / EDUCATOR
	EXPANSION JOINT
	FLEXIBLE HOSE
	FLOW NOZZLE
	FLUME
	GAUGE
	HOSE CONNECTION
H	IN LINE HEATER
	INLINE MIXER
S	IN LINE SILENCER
	P-TRAP
	PERFORATED PIPE
	PULSATION DAMPER
	QUICK CONNECTOR COUPLING WITH CAP
	QUICK CONNECTOR COUPLING
	QUICK CONNECTOR COUPLING (FEMALE)
	QUICK CONNECTOR COUPLING (MALE)
	REDUCER, CONCENTRIC
	REDUCER, ECCENTRIC
	SIGHT GLASS
	SILENCER
	STATIC MIXER
RS	REMOVABLE SPOOL
SP XX/YY	SAMPLE POINT
	TANK VENT
	UNION

PROCESS FITTINGS & DEVICES (CONT.)

SYMBOL	DESCRIPTION:
	SPRAY BAR
	SPRAY NOZZLE
	Y-TYPE STRAINER

PROCESS INSTRUMENTS

SYMBOL	DESCRIPTION:
	DIAPHRAGM SEAL
	FLOW CONDITIONING DEVICE
FM	FLOW METER, MAGNETIC
	FLOW METER, SONIC
	FLOW METER, TARGET
	FLOW METER, TURBINE / PROPELLER
	FLOW METER, POSITIVE DISPLACEMENT
	INSTRUMENT WELL
	ORIFICE PLATE IN QUICK CHANGE FITTING
	PITOT TUBE
	PITOT TUBE, AVERAGING
	RESTRICTION ORIFICE
	RESTRICTION ORIFICE DRILLED IN VALVE
	ROTAMETER
	ROTAMETER, INTEGRAL VALVE
	VENTURI
	VORTEX SENSOR

PROCESS EQUIPMENT

(SOME EQUIPMENT NOT TO SCALE TO CONSERVE SPACE)

SYMBOL	DESCRIPTION:
	AIR INTAKE FILTER
	AGITATOR
	BLOWER
	CONVEYOR
	CYCLONE SEPARATOR
	DAMPER
M	EQUIPMENT MOTOR
	FILTER
	HEAT EXCHANGER
	PUMP, CENTRIFUGAL
	PUMP, METERING
	PUMP, PERISTALTIC
	PUMP, PROGRESSIVE CAVITY
	PUMP, SUBMERSIBLE
	PUMP, VERTICAL TURBINE
	STRAINER, AUTO
	STRAINER, BASKET
	MULTI STAGE BLOWER

30% SUBMITTAL

NOT FOR CONSTRUCTION

REV	BY	CKD BY	DATE
NO.	REVISION		

SURPRISE
ARIZONA

CITY OF SURPRISE
SPA 1 WRF CAPACITY EXP
FACILITY RERATING

WATERWORKS ENGINEERS

INSTRUMENTATION

SYMBOLS AND LEGEND 2

CHECKED DB
DRAWN MC
DESIGN JHM

DATE
AUGUST 2022
PROJECT NUMBER
20-018
DRAWING NUMBER
N-00-002
SHEET NO. -

REUSE OF DOCUMENTS: THIS DOCUMENT, AND THE IDEAS AND DESIGN INCORPORATED HEREIN, AS AN INSTRUMENT OF PROFESSIONAL SEVICE, IS THE PROPERTY OF WATER WORKS ENGINEERS, LLC. AND IS NOT TO BE USED, IN WHOLE OR PART, FOR ANY OTHER PROJECT WITHOUT THE WRITTEN AUTHORIZATION OE WATER WORKS ENGINEERS,LLC.

FILE PATH: File Path

DATE AND TIME: 10/11/2013 3:33:16 PM

SCADA

PLC

MCC

TYP FOR BFV-412, 413, 414, & 415

TYP FOR FQIT-412, 413, 414, & 415

TYP FOR JAP-OD4N-412, JAP-OD4N-413, JAP-OD4N-414, & JAP-OD4N-415

OXD4 FLOW — FIR 1000 — FIT 1000

TOTALIZER — FIR 1000

POSITION INDICATION — AI 411

POSITION CONTROL — AI 411

FLOW — FQI 411

TOTALIZED FLOW — FQI 411

LAHH — AUTO DIAL WIN911

ODAN LEVEL — LIR 1002 — LIT 1002

REMOTE — HS 411A

START — YC 411B

STOP — YC 411C

RUN STATUS — YI 411

ALARM — YA 411

DO ANALYZER — AI 411

DO ANALYZER — AI 412

DO ANALYZER — AI 414

DO ANALYZER — AI 415

NH4 ANALYZER — AI 423

PLANT IV OX PLC GENERATOR — YA

PLANT IV OX PLC UPS — YA

GENERATOR — YA

UPS — YA

A N-40-102
FROM PROCESS AIR BLOWERS

BAV-301

LCP-MOV-411

A FAIL G RUN — YLA / YL
A SEAL — YLA
A TEMP — YLA
ETM — KQI 411
RESET
LOR — HMS 411A
STR — HMS 411B
STP — HMS 411C
HMS 411D
MINI CAS — 120V
LCP-OD4N-411

42"x36"

16"-WSP-PA

10"x16"

10"-WSP-PA

16"x10"

A N-10-102
TO PLANT IV SOUTH OXIDATION DITCH

SC 401-A — 120V

N-10-102 B
FROM PLANT IV SOUTH DITCH NH4 PROBE

LIT 1002

120V — FQIT 411 — BFV-411 — MOV-OD4N-411

120V — FQIT 412 — BFV-412 — MOV-OD4N-412

120V — FQIT 413 — BFV-413 — MOV-OD4N-413

120V — FQIT 414 — BFV-414 — MOV-OD4N-414

120V — FQIT 415 — BFV-425 — MOV-OD4N-425

LOOP # 7202-1

LE 1002

DO AE 411

10"-WSP-PA — JAP-OD4N-411 — MSH 411 — TSH 411

DO AE 412

120V — JAP-OD4N-412 — MSH 412 — TSH 412

NH4 AE 413

120V — JAP-OD4N-413 — MSH 413 — TSH 413

DO AE 414

120V — JAP-OD4N-414 — MSH 414 — TSH 414

10"-WSP-PA — JAP-OD4N-415 — MSH 415 — TSH 415

LOOP # 7203-1

24"-DIP-ML — B N-10-102 — TO PLANT IV SOUTH OXIDATION DITCH

24"-DIP-ML — C N-10-102 — TO PLANT IV SOUTH OXIDATION DITCH BYPASS LINE

LOOP # 7201-1 — MXR-OD4N-001

DO AO 415

LOOP # 7201-2 — MXR-OD4N-002

ZONE 1 ANOXIC

ZONE 2 OXIC

ZONE 3 OXIC

ZONE 4 SWING

ZONE 5 OXIC

OXIDATION DITCH NORTH

2ND STAGE SELECTOR BASIN

LOOP # 7204-2 — MX-OXD4-002

1ST STAGE SELECTOR BASIN

LOOP # 7204-1 — MX-OXD4-001

12"-DIP-DR

D N-10-102 — TO PLANT IV SOUTH OXIDATION DITCH

CHL-INF-.

E N-10-102 — TO PLANT IV SOUTH OXIDATION DITCH

CHL-INF-.

F N-10-102 — TO PLANT IV SOUTH OXIDATION DITCH

120V — FIT 2000 — FE 4000

FS-5
INFLUENT CHANNEL FROM PLANTS III, IV & V HEADWORKS/ GRIT CHAMBERS

INF-CHNL — FM — INF-CHNL

FS-26
RETURNED ACTIVATED SLUDGE (RAS) FROM PLNAT IV RAS/WAS PUMP STATION

B N-10-102
TO PLANT IV SOUTH DITCH ANALYZER

30% SUBMITTAL

NOT FOR CONSTRUCTION

NO.	REV/SION	REV BY	CKD BY	DATE
-	-	-	-	-

SURPRISE
ARIZONA

CITY OF SURPRISE
SPA 1 WRF CAPACITY EXP
FACILITY RERATING

WATERWORKS ENGINEERS

INSTRUMENTATION

PLANT IV NORTH OXIDATION DITCH SYSTEM P&ID

CHECKED JHM

DRAWN MIC

DESIGN DB

DATE
AUGUST 2022

PROJECT NUMBER
20-018

DRAWING NUMBER
N-10-101

SHEET NO. -

REUSE OF DOCUMENTS: THIS DOCUMENT, AND THE IDEAS AND DESIGN INCORPORATED HEREIN, AS AN INSTRUMENT OF PROFESSIONAL SEVICE, IS THE PROPERTY OF WATER WORKS ENGINEERS, LLC. AND IS NOT TO BE USED, IN WHOLE OR PART, FOR ANY OTHER PROJECT WITHOUT THE WRITTEN AUTHORIZATION OE WATER WORKS ENGINEERS,LLC.

FILE PATH: File Path

DATE AND TIME: 10/11/2013 3:33:16 PM

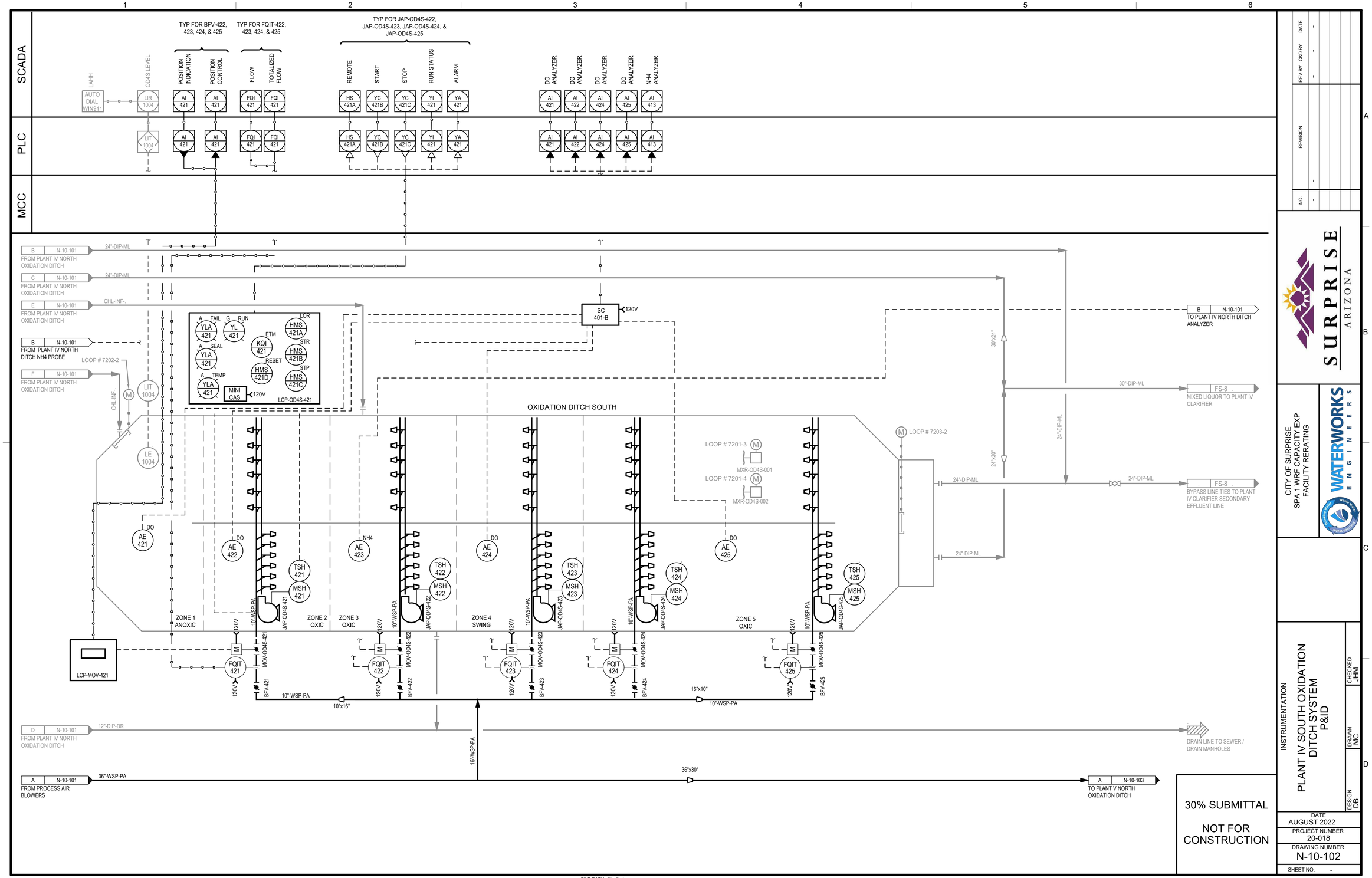

NO.	REV/SION	REV BY	CKD BY	DATE
-	-	-	-	-

SURPRISE ARIZONA

CITY OF SURPRISE
SPA 1 WRF CAPACITY EXP FACILITY RERATING

WATERWORKS ENGINEERS

INSTRUMENTATION
PLANT IV SOUTH OXIDATION DITCH SYSTEM P&ID

CHECKED JHM
DRAWN MC
DESIGN DB

DATE
AUGUST 2022

PROJECT NUMBER
20-018

DRAWING NUMBER
N-10-102

SHEET NO. -

REUSE OF DOCUMENTS: THIS DOCUMENT, AND THE IDEAS AND DESIGN INCORPORATED HEREIN, AS AN INSTRUMENT OF PROFESSIONAL SEVICE, IS THE PROPERTY OF WATER WORKS ENGINEERS, LLC. AND IS NOT TO BE USED, IN WHOLE OR PART, FOR ANY OTHER PROJECT WITHOUT THE WRITTEN AUTHORIZATION OE WATER WORKS ENGINEERS,LLC.

FILE PATH: File Path

DATE AND TIME: 10/11/2013 3:33:16 PM

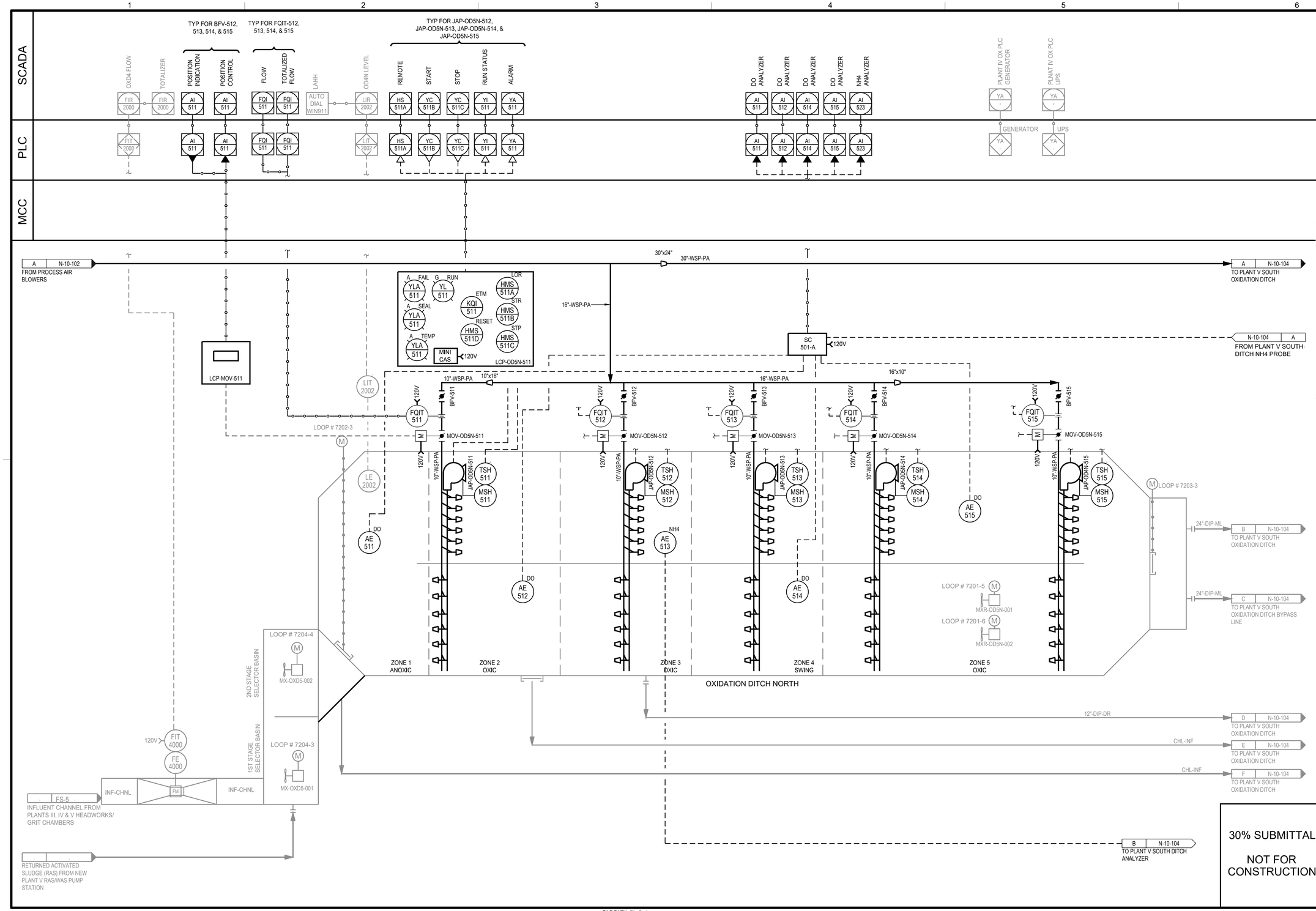

NO.	REVISION	REV BY	CKD BY	DATE
-	-	-	-	-

SURPRISE ARIZONA

CITY OF SURPRISE
SPA 1 WRF CAPACITY EXP
FACILITY RERATING

WATERWORKS ENGINEERS

INSTRUMENTATION
PLANT V NORTH OXIDATION DITCH SYSTEM
P&ID

CHECKED JHM
DRAWN MC
DESIGN DB

DATE AUGUST 2022
PROJECT NUMBER 20-018
DRAWING NUMBER N-10-103
SHEET NO. -

REUSE OF DOCUMENTS: THIS DOCUMENT, AND THE IDEAS AND DESIGN INCORPORATED HEREIN, AS AN INSTRUMENT OF PROFESSIONAL SEVICE, IS THE PROPERTY OF WATER WORKS ENGINEERS, LLC. AND IS NOT TO BE USED, IN WHOLE OR PART, FOR ANY OTHER PROJECT WITHOUT THE WRITTEN AUTHORIZATION OE WATER WORKS ENGINEERS,LLC.

FILE PATH: File Path

DATE AND TIME: 10/11/2013 3:33:16 PM

SCADA
PLC
MCC

TYP FOR BFV-422, 423, 424, & 425
TYP FOR FQIT-422, 423, 424, & 425
TYP FOR JAP-OD5S-522, JAP-OD5S-523, JAP-OD5S-524, & JAP-OD5S-525

LAHH
AUTO DIAL WIN911
OD4S LEVEL
LIR 2004
LIT 2004
POSITION INDICATION
POSITION CONTROL
FLOW
TOTALIZED FLOW
REMOTE
START
STOP
RUN STATUS
ALARM
DO ANALYZER
NH4 ANALYZER

B N-10-103 FROM PLANT V NORTH OXIDATION DITCH 24"-DIP-ML
C N-10-103 FROM PLANT V NORTH OXIDATION DITCH 24"-DIP-ML
E N-10-103 FROM PLANT V NORTH OXIDATION DITCH CHL-INF
B N-10-103 FROM PLANT V NORTH DITCH NH4 PROBE
F N-10-103 FROM PLANT V NORTH OXIDATION DITCH LOOP # 7202-4

LCP-OD5S-521: A FAIL, G RUN, LOR, YLA 521, YL 521, HMS 521A, ETM, KQI 521, A SEAL, YLA 521, STR, HMS 521B, RESET, A TEMP, YLA 521, HMS 521D, STP, HMS 521C, MINI CAS, 120V

SC 501-B 120V

A N-10-103 TO PLANT V NORTH DITCH ANALYZER
30"-DIP-ML FS-8 MIXED LIQUOR TO PLANT V CLARIFIER
24"-30"
24"-DIP-ML FS-8 BYPASS LINE TIED TO PLANT V CLARIFIER SECONDARY EFFLUENT LINE

OXIDATION DITCH SOUTH

LOOP # 7201-7 MXR-OD5S-001
LOOP # 7201-8 MXR-OD5S-002
LOOP # 7203-4

LE 2004
AE 521 DO
NH4 AE 523
AE 522 DO
AE 524 DO
AE 525 DO
TSH 521 MSH 521
TSH 522 MSH 522
TSH 523 MSH 523
TSH 524 MSH 524
TSH 525 MSH 525

ZONE 1 ANOXIC
ZONE 2 OXIC
ZONE 3 OXIC
ZONE 4 SWING
ZONE 5 OXIC

10"-WSP-PA JAP-OD5S-521 120V MOV-OD5S-521 FQIT 521 BFV-521
JAP-OD5S-522 MOV-OD5S-522 FQIT 522 BFV-522
JAP-OD5S-523 MOV-OD5S-523 FQIT 523 BFV-523
JAP-OD5S-524 MOV-OD5S-524 FQIT 524 BFV-524
JAP-OD5S-525 MOV-OD5S-525 FQIT 525 BFV-525

LCP-MOV-421

10"-WSP-PA 10"x16" 16"-WSP-PA 16"x10"
16"-WSP-PA
BAV-501
12"-DIP-DR

A N-10-103 FROM PROCESS AIR BLOWERS 24"-WSP-PA
D N-10-103 FROM PLANT V NORTH OXIDATION DITCH 12"-DIP-DR
12"-DIP-DR
12"-DIP-DR DRAIN LINE TO SEWER/ DRAIN MANHOLES

30% SUBMITTAL
NOT FOR CONSTRUCTION

NO.	REVISION	REV BY	CKD BY	DATE
-	-	-	-	-

SURPRISE ARIZONA

CITY OF SURPRISE
SPA 1 WRF CAPACITY EXP
FACILITY RERATING

WATERWORKS ENGINEERS

INSTRUMENTATION
PLANT V SOUTH OXIDATION DITCH SYSTEM P&ID

CHECKED JHM
DRAWN MC
DESIGN DB

DATE AUGUST 2022
PROJECT NUMBER 20-018
DRAWING NUMBER N-10-104
SHEET NO. -

REUSE OF DOCUMENTS: THIS DOCUMENT, AND THE IDEAS AND DESIGN INCORPORATED HEREIN, AS AN INSTRUMENT OF PROFESSIONAL SEVICE, IS THE PROPERTY OF WATER WORKS ENGINEERS, LLC. AND IS NOT TO BE USED, IN WHOLE OR PART, FOR ANY OTHER PROJECT WITHOUT THE WRITTEN AUTHORIZATION OE WATER WORKS ENGINEERS,LLC.

FILE PATH: File Path

DATE AND TIME: 10/11/2013 3:33:16 PM

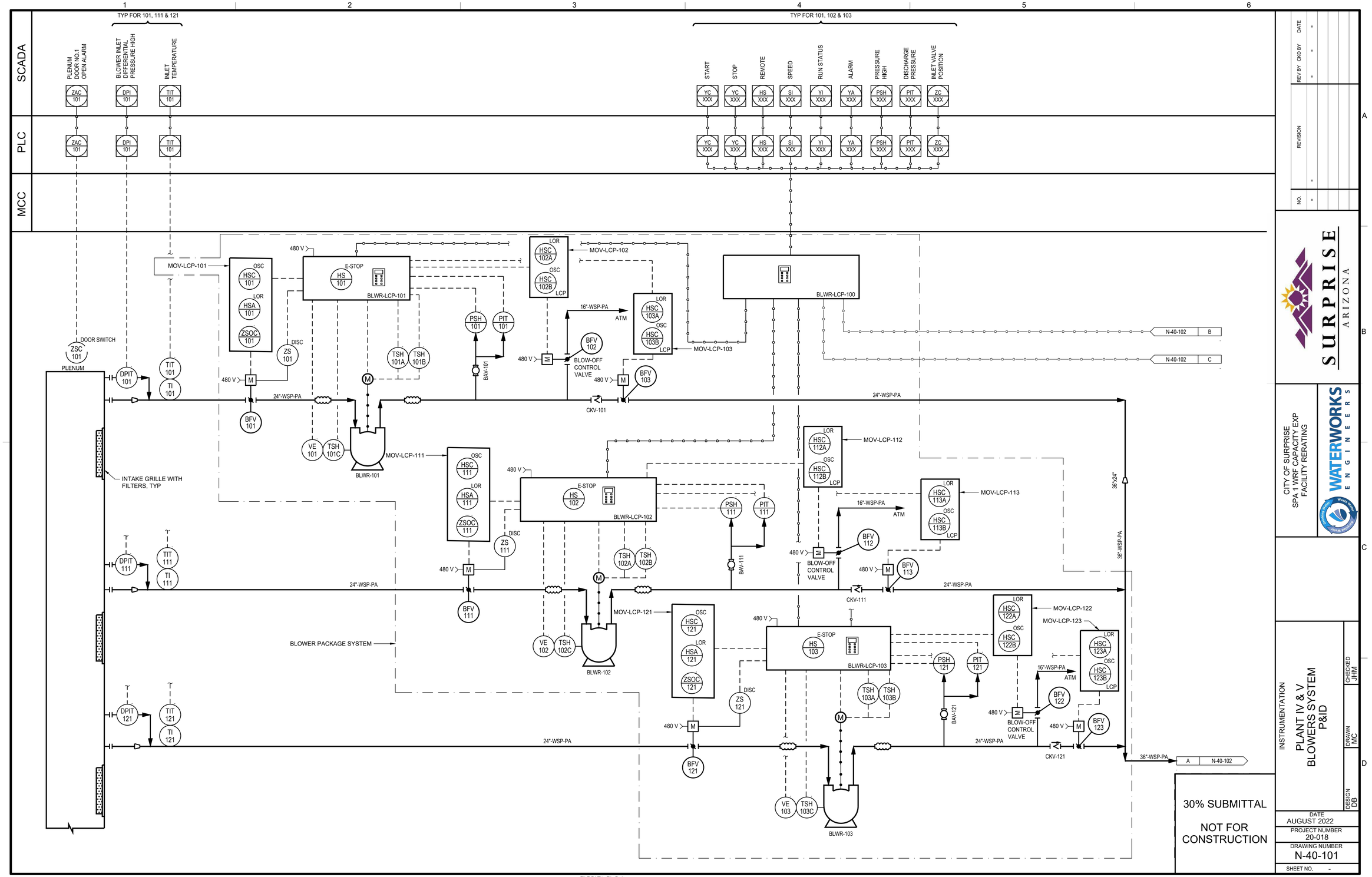

NO.	REVISION	REV BY	CKD BY	DATE
-	-	-	-	-

SURPRISE ARIZONA

CITY OF SURPRISE
SPA 1 WRF CAPACITY EXP
FACILITY RERATING

WATERWORKS ENGINEERS

INSTRUMENTATION
PLANT IV & V
BLOWERS SYSTEM
P&ID

CHECKED JHM
DRAWN MC
DESIGN DB

30% SUBMITTAL

NOT FOR CONSTRUCTION

DATE
AUGUST 2022

PROJECT NUMBER
20-018

DRAWING NUMBER
N-40-101

SHEET NO. -

REUSE OF DOCUMENTS: THIS DOCUMENT, AND THE IDEAS AND DESIGN INCORPORATED HEREIN, AS AN INSTRUMENT OF PROFESSIONAL SEVICE, IS THE PROPERTY OF WATER WORKS ENGINEERS, LLC. AND IS NOT TO BE USED, IN WHOLE OR PART, FOR ANY OTHER PROJECT WITHOUT THE WRITTEN AUTHORIZATION OE WATER WORKS ENGINEERS,LLC.

FILE PATH: File Path

DATE AND TIME: 10/11/2013 3:33:16 PM

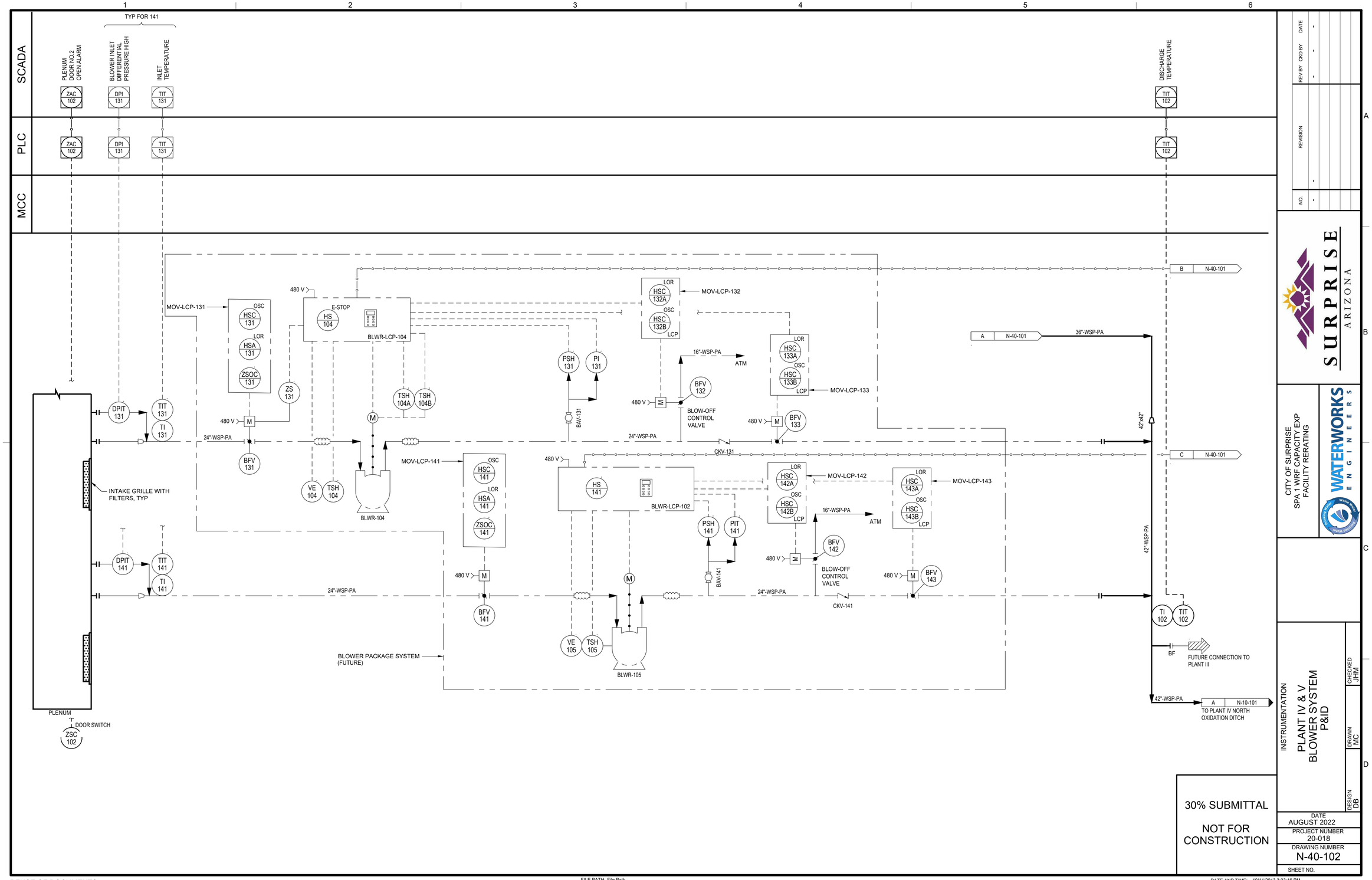

NO.	REVISION	REV BY	CKD BY	DATE
-	-	-	-	-

SURPRISE
ARIZONA

CITY OF SURPRISE
SPA 1 WRF CAPACITY EXP
FACILITY RERATING

WATERWORKS ENGINEERS

INSTRUMENTATION

PLANT IV & V BLOWER SYSTEM P&ID

CHECKED JHM
DRAWN MC
DESIGN DB

30% SUBMITTAL

NOT FOR CONSTRUCTION

DATE
AUGUST 2022

PROJECT NUMBER
20-018

DRAWING NUMBER
N-40-102

SHEET NO.

REUSE OF DOCUMENTS: THIS DOCUMENT, AND THE IDEAS AND DESIGN INCORPORATED HEREIN, AS AN INSTRUMENT OF PROFESSIONAL SEVICE, IS THE PROPERTY OF WATER WORKS ENGINEERS, LLC. AND IS NOT TO BE USED, IN WHOLE OR PART, FOR ANY OTHER PROJECT WITHOUT THE WRITTEN AUTHORIZATION OE WATER WORKS ENGINEERS,LLC.

FILE PATH: File Path

DATE AND TIME: 10/11/2013 3:33:16 PM

SECTION 11626

AIR SLEEVE TURBO BLOWER SYSTEM

PART 1 - GENERAL

1.1 SCOPE OF WORK

A. Provide all labor, materials, equipment, appurtenances, and incidentals required and install, complete and ready for operation and field test, high-speed turbo blower systems with direct connected Permanent Magnet Synchronous drive motor with cooling system or High Speed Induction motor, air bearings, enclosure, variable-frequency drive (VFD) to vary the speed of the motor/blower, valves for blow-off, back flow prevention, and isolation, inlet filter, blow-off silencer, flexible connectors, pressure and temperature monitoring devices, local blower control panel, harmonic filter, custom software for control and Ethernet communication.

B. Provide a Local Blower Control Panel and System Master Control Panel with Ethernet communications for each of the blowers and coordinate operation with the plant's existing SCADA system. Startup, testing and initiation of operation of the supplied blower equipment shall include integrating the automatic operation of the blowers with the existing SCADA systems at the Surprise Facility.

C. The Master Control Panel shall provide the synchronization, staging, ramping, etc between all the manufacturer provided blowers. This system is to insure a continuous and smooth transition of blowers on/off, ramping, etc in response to changes in discharge header pressure to maintain a steady (+/- 0.1 psi) air header pressure at all times.

D. All blower systems provided under this specification shall be from the same manufacturer.

1.2 SUBMITTALS

A. All submittals shall be made by the manufacturer, on manufacturer's letterhead, and signed by an authorized employee of the manufacturer. All submittals shall be in English. Submittals shall include at least the following:
   1. Quality of Construction:
      a. Proof of UL Certification: Manufacturer must be UL508A certified for local control panels and submit proof of certification.
      b. Statement of conformance letter stating conformance to the specifications with all exceptions noted. Statement of conformance must be signed by an employee of the manufacturer authorized to make such statements.
      c. Bill of Materials: Complete bill of materials of all components and equipment supplied. Bill of materials shall include a description of the installation of the components along with the make and model number and replacement schedule and replacement cost of the primary components including, but not limited to the following:
         1) Enclosure
         2) Air Bearing
         3) Motor

4) Cooling System
5) Line Input Reactor
6) Sinewave Filter
7) VFD
8) PLC (programmable logic controller) - ControlLogix
9) OIT (operator interface terminal)
10) Ethernet Switches
11) Harmonic Filter
12) Sensors and transmitters (temperature, pressure, vibration, etc)
13) Control Transformers
14) Main Circuit Breaker
15) Control Valves

d. Submit a harmonic analysis with the shop drawings showing that the harmonics will be within the limits of IEEE Standard 519, 1992, The Point of Common Coupling (PCC) is the bus of the MCC that feeds each blower.

2. Power Guarantee:
   a. Preliminary Performance Test: Submit proof and associated results of past performance testing to certify that the proposed model and size has been previously tested in accordance with the manner specified herein.
   b. Submit certified performance curves for each blower system proposed, including speed, capacity, horsepower, input wire KW, and efficiency, over the range of operation. Indicate both surge and overload points for each curve.
3. Warranty and Service Agreements: Submit a detailed description of the Manufacturer's warranty and service agreement.
   a. Standard Warranty: The blower Manufacturer must guarantee in writing to warrant the units free of defects in material and workmanship for a period of at least five (5) years from the date of substantial completion under the operating conditions specified.
   b. Extended Warranty: Include a detailed description of the Manufacturer's extended warranty options. Description shall include pricing structure.
   c. Service Agreements: Include a detailed description of the Manufacturer's service options. Description shall include pricing structure.
4. Product Data:
   a. Blower characteristic curves, specifications, and performance.
      1) Descriptive brochures and blower data.
      2) Predicted performance curves indicating speed, capacity, horsepower, input wire KW, and efficiency, over the range of operation. Indicate both surge and overload points for each curve.
      3) Material list and catalog information showing the details of blower construction.
      4) Outline installation drawings for each unit.
      5) Material list and catalog information showing the details of blower construction.
      6) Blower Package weight and weights of each separate item of equipment.
      7) List of recommended spare parts for five (5) years operation.
      8) Complete bill of materials of all components and equipment supplied.

b. Motor characteristics, specifications, and performance.
    1) Descriptive bulletins.
    2) Outline drawings with dimensions.
    3) Cut-away and exploded view drawings.
    4) Parts list with material designations.
    5) Nameplate data.
    6) Description of insulation system.
    7) Service factor.
    8) Efficiency at 1/2, 3/4, and full load.
    9) Power factor at 1/2, 3/4, and full load.
    10) Special features including winding temperature detectors.
c. Harmonic Filter:
    1) Descriptive bulletins.
    2) Outline drawings with dimensions.
d. Calculations and other information to meet requirements of design criteria.
e. Complete description of the control system for local blower control panels and SCADA interface with the local blower control panels.
f. Complete description of all instrumentation to meet requirements for compatibility with existing system.
g. Digital copy of all software with instructions for re-installation and any passwords required.

5. Detailed Drawings:
    a. Certified dimensional drawings of each blower unit, including cutaway views.
    b. Instrumentation and control system schematics and installation details, tubing and conduit details, and wiring diagrams for electrical and control components provided.
    c. Any necessary dimensioned drawings to coordinate piping layout with structural, architectural, electrical and/or other mechanical work.
    d. Certified drawings of the local blower control panels.
        1) Provide electrical and control schematic wiring diagrams and point-to-point components and instrumentation.
        2) Provide interconnection wiring details and coordination with external communication networks.
        3) Provide interconnection wiring diagram with all instruments, monitoring devices and equipment.
        4) Provide control panel front and back panel layouts to scale showing all components, dimensions to scale, and NEMA ratings. Drawings shall include legend schedules.
6. Quality Control Submittals:
    a. Test reports: Submit after fabrication, but prior to delivery of equipment to jobsite location. All reports shall be in USA English units of measure.
    b. Results of each required test: Summarized in a separate, certified, written report.
    c. Reports: Organize and clearly present testing methods and procedures, testing equipment, test data, calculations and analyses, conclusions and recommendations.
    d. Test reports shall be signed and sealed by the blower Manufacturer's Engineer in charge of the testing.
    e. Four copies of each certified written test report shall be submitted to Engineer for review and acceptance. Test reports shall have been reviewed and accepted by Engineer prior to jobsite delivery.

f. If the certified factory test reports indicate noncompliance with the requirements of the Contract Documents, the blowers shall be reworked and retested until compliance with the specifications is attained.
g. Certified factory test results:
    1) Certified acoustical test results for each blower package.
    2) Certified report of dynamic balancing and maximum vibration amplitude.
    3) Harmonic filter test: Certified harmonic test results.
    4) Factory Acceptance Testing of the Local Blower Control Panels and shall include: Factory As-Built control panel electrical schematics, interconnection wiring diagram, bill of materials, calibration reports, and a signed functional description of the blower system.

7. Certified Blower Performance Test:
    a. Submit a detailed test plan with complete piping and instrumentation configuration diagram per the specifications. The location, type, and quantity of all major instruments necessary for performance data, with corresponding distances from reference points, shall be identified per this specification. As a minimum, the detailed test plan shall include:
        1) Quality control procedures.
        2) Test procedure and method of calculating results.
8. Training Video
    a. All equipment suppliers shall supply to the Engineer three copies of a training video specific to the equipment provided for the project. The video shall be of a high quality, with both picture and sound.
    b. The training video shall be organized so as to show and identify each element of the equipment; including a clear explanation of its function, troubleshooting criteria; disassembly and reassembly
    c. Portions of the training video shall be recorded at the on-site O&M training sessions conducted by the equipment Manufacturer's representative.
    d. The video shall be submitted to the Engineer for approval not less than 60 calendar days after the start-up.
    e. All audio video shall be recorded in digital video format. The audio shall be recorded through the video camera at the same time of the video recording to ensure synchronization between the audio and video recordings.
    f. All audio/video recordings shall be delivered to the Engineer in DVD format.

1.3 WITNESS TESTING

A. Upon completion of assembly, the blower, package shall be performance tested at the place of manufacture, witnessed by representatives of the OWNER and a Licensed Professional Engineer experienced in testing requirements of ASME PTC-10. The Witnessing Professional Engineer shall sign, stamp and date the test procedure and results, certifying that the assembled systems were tested together, as a system, in the blower manufacturer's facility.

B. Performance testing shall utilize PTC-10 – 1997 "Type 2" test as referenced section 3.2.2. An open loop configuration shall be used as defined in PTC-10 figure 4.5. Where impractical inlet piping shall be omitted and calibrated equipment shall be used to determine inlet conditions to the equipment. Flow measurement shall be made at the discharge per PTC-10 sec. 4.8.

C. All test equipment shall be calibrated and certified by an independent test agency no more than 12 months prior to the test date. Certificates shall show the stability of calibration over a period of at least one year per ISO 9001, Paragraph 4.11.

D. The discharge conditions are defined as the conditions that exist at the discharge flange of the blower at the typical point of connection to the owner's equipment

E. At a minimum, the blower system shall be factory tested for duration of not less than 4 hours at maximum load and maximum temperature.

F. A power meter calibrated to NIST standards instantaneously monitoring all electrical legs for voltage and amperage to calculate instantaneous power usage shall measure the electrical power input to the system as described, including all auxiliary systems. Measured power shall include wire-to-air and include all losses associated with electrical power, including, but not limited to the motor, inverter, and cooling system, if used.

G. The Witnessing Professional Engineer shall sign each copy of the test data log sheet certifying that the required tests were performed in strict accordance with these specifications and the ASME PTC 10

H. Velocity vibration versus frequency levels shall be recorded within 10-1,000 and 10-10,000 Hz frequency range. Vibration shall be reported velocity (in/sec) versus frequency.

I. The blower test report shall present computations in exact accordance with the appropriate section or testing codes with performance curves showing flow, pressure, and power inputs.

J. Test results, certified calibration records for all equipment used and signed/stamp test log shall be submitted for approval prior to blower shipment.

1.4 OPERATING AND MAINTENANCE DATA

A. Complete operating and maintenance instructions shall be provided for all equipment. The instructions shall be prepared specifically for this installation and shall include all cuts, drawings, equipment lists, descriptions, etc, that are required to instruct operating and maintenance personnel unfamiliar with such equipment. The maintenance instructions shall include trouble shooting data and full preventative maintenance schedules. Operation and Maintenance documents shall be provided both written and electronically in a searchable text format (PDF format is not acceptable for text unless it is searchable).
   1. Submit all dimensions, calculations and other information to be in USA English units of measure.
      a. Provide a list of components and catalog cuts fully describing all items:
      b. Mechanical and structural components.
      c. Instruments.
      d. Programmable Logic Controllers (PLC) - ControlLogix.
      e. Operator Interface Terminals (OIT) and machine monitors.
      f. Electrical components.
      g. Control panels.
   2. General description of blower with all performance data, blower curves, and model. Provide detailed information on structural, mechanical, electrical, or other changes or

modifications necessary to adapt non-specified materials to the arrangement or details shown. Include the actual performance test report.

3. Mechanical drawings with general arrangement showing enclosure dimensions, overall weights, weights of largest components requiring removal for maintenance, and clearances required around unit for maintenance access. Indicate surface preparation and paint specifications.
4. Description of process control logic and process and instrumentation diagrams.
5. Drawings of all control panels to include:
   a. Electrical ladder diagram.
   b. Interconnections to all components and instruments outside the panel.
   c. Control panel front door layout.
   d. Backpanel interior layout.
   e. Operator interface screens for the Local Blower Control Panels (LBCP).
   f. Electrical and control schematic wiring diagrams and point-to-point data including interconnection and coordination with external communication signals.
6. Operating description for the LBCP. Provide a copy of the software ladder logic covering all logic and sequences of operation, communications and I/O configurations, tag database and driver setup. Provide a software copy of all documented PLC code on CD.
7. Final parameter settings of the VFDs.
8. Provide a detailed description of the data acquisition, monitoring, and predicted preventative maintenance software. Provide project-specific Operator Interface screens with detailed descriptions, the various tattletale monitors, preventative maintenance items, and data logging features.
9. Provide a list of instrument settings, configuration, and installation details.
10. Provide input/output (I/O) listing for all control panel PLCs.
11. Provide OIT screens, alarms, trends, communication setup and tag database.
12. Indicate all scheduled maintenance requirements and routine inspections. Include maintenance summary forms.
13. Provide list of recommended spare parts.
14. Provide a troubleshooting guide and alarm listing.
15. Provide a detailed description of available service agreement programs.
16. Provide the local sales representative contact information with the company name, contact person, phone number and address.
17. Provide the local technical representative contact information with the company name, contact person, phone number and address.

1.5 REFERENCE STANDARDS

A. American Society for Testing and Materials (ASTM)
   1. ASTM A36 - Standard Specification for Carbon Structural Steel.
   2. ASTM A48 - Standard Specification for Gray Iron Castings.

B. Compressed Air and Gas Institute (CAGI)
   1. CAGI S5.1 – PNEUORP Test Code for the Measurement of Sound from Pneumatic Equipment.

C. American Society of Mechanical Engineers (ASME)
   1. ASME PTC-10 – Compressors and Exhausters, Latest edition

D. American Institute of Steel Construction (AISC)

E. American Welding Society (AWS)

F. National Electrical Manufacturers Association (NEMA)

G. Institute of Electrical and Electronics Engineers (IEEE)

H. National Fire Protection Agency (NFPA) 79

I. National Electric Code (NEC)

J. International Society of Automation (ISA)

K. American National Standards Institute (ANSI)

L. Anti-Friction Bearing Manufacturers Association (AFBMA)

NOTE: Where reference is made to one of the above standards, the revision in effect at the time of bid opening shall apply.

1.6 QUALITY ASSURANCE

A. To assure compatibility of all system components, the air blower and motor assemblies and all accessories and controls specified herein shall be manufacturer's standard, cataloged product, modified as required to provide compliance with the specifications and service conditions as specified and indicated. The Manufacturer shall be fully experienced, reputable and qualified in the manufacture of the equipment to be provided. The equipment shall be manufactured in accordance with the best practices and methods.

1.7 SYSTEM DESCRIPTION

A. The equipment specified herein is intended to be standard equipment for providing airflow to satisfy jet aeration airflow demands for oxidation ditches.

B. The jet aeration blowers shall be installed in the new blower room. Installation shall require permanent attachment to the building floor slab.

C. Blowers shall be air bearing type turbo blowers and shall not require oils or lubricants for adequate operation. Blowers shall be capable of variable speed and output operation. The blowers will receive filtered air and shall discharge to the main air header. The output of each blower shall be capable of being automatically controlled to provide the air flow rate through the blower as needed to maintain an external flow rate setpoint. The output of each blower shall also be capable of being automatically controlled based on a pressure setpoint in the common discharge header and/or VFD speed control setpoint.

D. The blowers shall have the capability to be remotely operated in manual or automatic mode, including remote switching between modes of operation (manual/automatic ON/OFF speed control, flow control, and pressure control) via the Local Blower Control Panel and the plant's existing SCADA system.

1.8 DELIVERY, STORAGE AND HANDLING

A. All equipment shall be skid mounted or crated and delivered to protect against damage during shipment.

B. Factory assembled parts and components shall not be dismantled for shipment unless permission is received in writing from the Engineer.

C. Finished surfaces of all exposed flanges shall be protected by wooden blank flanges, strongly built and securely bolted thereto.

D. Finished iron or steel surfaces not painted shall be properly protected to prevent rust and corrosion.

E. No shipment shall be made until approved by the Engineer in writing.

1.9 MAINTENANCE

A. Provide all special tools and appliances necessary to disassemble, service, repair, and adjust the blower equipment and appurtenances. The following spare parts shall be provided:
   1. One (1) pair of HEPA air filter systems per blower.

B. All spare parts shall be suitably packaged and clearly identified with indelible marking on the containers. Tools and spare parts (except for the air filters) shall be supplied in a tool chest for long-term storage and marked with Manufacturer's name, along with a complete description of contents.

C. The blower Manufacturer shall include available maintenance and service agreement options, and associated pricing, for future consideration.

1.10 MANUFACTURER'S SERVICES

A. Field Services:
   1. The blower Manufacturer shall provide experienced start-up service personnel to inspect and certify the final installation and supervise the field start-up tests of the equipment and software.
   2. The services of the representative shall be provided for a minimum of three (3), 8-hour days. This time is exclusive of travel or lodging time.
   3. If there are difficulties in operation of the equipment due to the blower Manufacturer's fabrication and programming, additional service shall be provided at no extra cost to Owner.

B. Programming Services:
   1. The blower Manufacturer shall provide the services of the programmer responsible for programming the Local Blower Control Panels.
   2. The services of the programmer shall be provided for a minimum of five 8-hour days to assist Owner's programmer with programming and troubleshooting of aeration system and blower software programs as well as coordinate with monitoring and control for the plant SCADA system. This time is exclusive of travel or lodging time.
   3. The programmer must have complete knowledge of proper blower operation and of the blower software programs supplied in this section.

C. Training Services:
   1. The blower Manufacturer shall provide a training session at the place of installation.
   2. The training session shall be provided for a minimum of two 8-hour days. This time is exclusive of travel or lodging time.
   3. The trainer must have complete knowledge of proper blower operation and of the blower and system controls, and software programs supplied in this section.

PART 2 - PRODUCTS

2.1 GENERAL

A. The blower manufacturer shall supply, coordinate, start-up, and calibrate all items specified in this section.

B. After reaching operational speed, noise emission from each blower package shall not exceed 80 dBa at the machine location, at the air intake and at the discharge piping system, without any special sound attenuation installed in the blower room.

C. Each blower package shall weigh less than 2,100 lbs.

D. All information shall be in USA English units of measure.

E. Stainless steel nameplates giving the name of the Manufacturer, the serial number, model number, horsepower, speed, voltage, amperes and any other pertinent data shall be attached to each motor.

2.2 APPROVED MANUFACTURER

A. The following manufacturers have been approved for this project:
   1. Lone Star Blower
   2. Neuros APG
   3. United Blowers
   4. Or Approved Equal

2.3 DESIGN CONDITIONS

A. All the conditions specified herein shall be as defined in ASME PTC 10 - 1997 Performance Test Code on Compressors and Exhausters (re-affirmed in 2003). All the pressures and temperatures specified herein refer to stagnation conditions as defined in ASME PTC-10. Inlet conditions are defined as the conditions that exist at the inlet flange of the blower package. The discharge conditions are defined as the conditions that exist at the discharge flange of the blower package.

B. Design Requirements:
   1. Site conditions:
      a. Elevation: 1100 feet (above sea level)
      b. Inlet air temperature range:
         1) Average Conditions: 95 °F
         2) Summer Conditions: 115 °F
         3) Winter Conditions: 35 °F
      c. Relative humidity range:

1) Average Conditions: 30%
2) Summer Conditions: 30% to 70%
3) Winter Conditions: 5% to 60%

2. Quantity of turbo-compressors:
   a. Jet Aeration Blowers 5 ea (4 duty, 1 standby)
3. Air flow rate per turbo-compressor (continuous):
   a. Jet Aeration Blowers 7,900 acfm/ea

4. Differential pressure:
   a. Jet Aeration Blowers 6.0psi

C. Motor Design Requirements:
   1. The high-speed permanent magnet type motor shall be as follows:
      a. Motor horsepower per turbo-compressor: 350 hp maximum
      b. Volts/Phase/Hertz: 480 volts/3 phase/60 hertz
      c. Motor speed: 10,000 rpm maximum
      d. Enclosure: IP33D

D. The blowers shall be capable of operating continuously and satisfactorily at any point between the minimum and the maximum flows (45 percent to 100 percent) without any surge, vibration, hunting, or excessive heating of the bearings.

E. The blowers provide intermittent/cyclical air to the membrane filtration equipment for air scour. In order to meet the demands of this application, the blower must be able to start and stop 20 times per hour without experiencing performance loss or failure during the warranty period. This intermittent operation can either be accomplished by turning the blower on and off or through a blower "unload" condition where a nominal amount of air is discharged from the blower through the blow off valve.

2.4 ENCLOSURES

A. Each blower shall be supplied with a standard sound enclosure covering the entire blower package.

B. The blower enclosure shall contain built in inertial particle separation to prevent particles from entering the blower core.

C. The blower system shall contain an inlet silencer and discharge silencer.
   1. The inlet silencer shall be supplied by the CONTRACTOR.
   2. The discharge silencer will be standard to the manufacturer and will be within the blower enclosure.

D. Access:
   1. The sound enclosure must be designed for easy inspection and maintenance of all blower package components.
   2. Hinged doors or removable panels shall provide easy and quick access for routine maintenance of the blower and the package components.
   3. Doors and panels shall use a frame, reinforcements and supporting elements as required.
   4. Blowers shall be anchored to the concrete equipment pad in at least four (4) locations that facilitate the local seismic code.

E. Electrical components, instrumentation and instrument connections shall not be mounted on or interfere with doors.

F. Enclosure design and build shall be such that no heat is allowed to be generated by the Blower.

G. The enclosure housing the blower and blower appurtenances (e.g. blower, VFD, control panel, etc) shall be NEMA 12, painted steel.

2.5 BLOWERS

A. Blowers shall be air-foil bearing type turbo blowers and shall not require oils or lubricants for adequate operation. Blowers shall be capable of variable speed and output operation.

B. Blower packages shall be manufactured by a UL508A certified manufacturer, with certification label shown on nameplate, at point of manufacturing.

C. Blower casing shall have a maximum continuous duty design temperature of 400 degrees Fahrenheit, and a design pressure of 50 psig.

D. Impellers:
   1. Blower impellers shall be of the backswept three dimensional high efficiency configuration, designed using computational fluid dynamics (CFD) with two stages in one (axial and centrifugal), milled from forged aluminum alloy, and with first lateral critical speed at least 120 percent of the maximum allowable operating speed.
   2. The impeller shall be mounted directly to the motor shaft and shall be statically and dynamically balanced.
   3. The axial gap between the impeller and blower casing shall be adjusted by shims as needed. A single impeller shall be provided per blower.

E. The bearings shall be sized for a minimum of expected ten (10) years between major overhauls and shall consider the high cycling operation listed previously.

2.6 ELECTRICAL

A. Provide an electrical distribution cabinet integrally mounted on or inside the blower package. The electrical panel shall consist of main circuit breaker, control power transformer, fuses and breakers, blower VFD including motor starters for ancillary motors, phase monitor, transient voltage surge suppressor, and support electrical components required for a complete, operable system. A harmonic filter shall be provided separately for each unit.

B. Motor:
   1. The motor shall be Permanent Magnet Synchronous Motor (PMSM) or High Speed Induction Motor (HSIM) combined with a sinus (sine-wave) filter to maintain cool motor operation and constant motor efficiency with motor speed turn down. Each PMSM shall be provided with an internal glycol cooling heat exchanger system with exhaust heat discharged to the process air. Air cooling of HSIMs is allowable.
   2. Each blower shall be equipped with a 460 volt, 60 Hz, 3-phase, motor. Motor frame shall be horizontal with a totally enclosed fan cooled enclosure type.
   3. The motor shall have a 1.15 service factor.
   4. The motor shall be able to start under the starting conditions required.

5. The blower Manufacturer shall be responsible for coordinating the starting torque requirement of the blower and the motor.
6. The motor shall be capable of continuous operation at full load and rated frequency with a voltage variance of +/- 10 (ten) percent of the nameplate voltage.
7. The motor shall be capable of operation at the rated voltage with a variance of +/- 5 percent of the nameplate frequency.
8. Motor shall be rated for inverter duty and shall be in accordance with NEMA MG1-2003 REV1, Part 31.
9. All motors shall be sufficient size for the duty to be performed and shall not exceed their full-rated load when the driven equipment is operating at specified capacity and over the entire operational range. Unless otherwise noted, motors shall not be overloaded at any discharge condition. The motor shall not be required to deliver more than its rated nameplate full load amperage, at the 1.0 service factor, under any condition of mechanical or hydraulic loading (i.e. although a 1.15 service factor is required, it may not be used under any condition).
10. All motors shall be continuous time rated suitable for operation in a 40 degrees C ambient unless noted otherwise.
11. Motors shall have a minimum Class F non-hygroscopic insulation system but shall be limited to Class B Temperature-Rise, at 1.15 service factor. Motors shall have a final coating of chemical resistant corrosion and fungus protective epoxy fortified enamel finish sprayed over red primer over all interior and exterior surfaces. Stator bore and rotor of all motors shall be epoxy coated.
12. Nameplates shall be stainless steel. Lifting lugs or "O" type bolts shall be supplied on enclosures. Enclosures shall have stainless steel screens. Motors shall be protected for corrosion, fungus and insects.
13. All motors shall be of the premium efficiency and high power factor type. All motors shall be the corrosion resistant type.

C. Variable Frequency Drives
1. VFDs shall be selected and sized for proper operation with the blower motor. VFD shall be "off the shelf" from a known VFD Manufacturer who has a base of operation and support in North America. All drive adjustments and settings shall be performed by the Manufacturer.
2. The variable frequency drive shall comply with the latest applicable standards of ANSI, NEMA, IEEE, and the National Electrical Code.
3. Variable frequency drives shall operate as specified on standby generators or normal power sources.
4. Variable frequency drives shall be 6 pulse (or greater).
5. The variable frequency drives shall be provided with an output filter to reduce the transient voltage (dv/dt) at the motor terminals.
6. The variable frequency drives (VFD) shall be rated at 480 VAC input with features and options as specified.
7. The variable frequency drives shall be rated for the HP, full load current and rpm of the motor. The variable frequency drives shall be designed to provide microprocessor based continuous speed adjustment of three phase motors.
8. The variable frequency drives shall have an efficiency that exceeds 97% at 100% speed and load. The efficiency shall exceed 95% at 50% speed and load. The variable frequency drives shall maintain the line side displacement power factor no less than 0.95 regardless of speed and load. Variable frequency drive efficiency shall be defined as drive output power at the motor output terminals divided by the input power at the line side of the main circuit breaker.
9. Standard operation conditions shall be:

a. Incoming power: Three phase, 480V (+10% to -10%) and 60 hertz (+/ - 2 hertz) power to a fixed potential DC bus level.
b. Humidity: 0 to 95% (noncondensing).
c. Altitude: 1,000-1,500 feet above sea level.
d. Ambient temperature: 0 to 40 degrees C.

10. All variable frequency drive programmable parameters shall be adjustable from a digital operator keypad located on the front door of the variable frequency drive.
11. The variable frequency drives shall have the following system interfaces:
    a. Remote starting/stopping capabilities; a minimum of four (4) alarm inputs for remote safety shut down controls.
    b. Outputs (dry contact outputs) – Running, HOR switch positions, each status and position and Fault,
    c. Ethernet communications output cards.

D. Harmonic Filter
1. Provide harmonic filters to meet IEEE 519, latest requirements.

2.7 INLET FILTERS

A. Pre-Filter (to be supplied by CONTRACTOR):
1. The pre-filter shall be an average efficiency, pleated panel, disposable type. Each filter shall consist of synthetic pleated media, media support grid, and enclosing frame.
2. Design Criteria:
    a. The total filter area shall have nominal dimensions of 24 inches by 48 inches by 4 inches. This shall be achieved by using two (2) standard 24 inch by 24 inch by 4 inch filters stacked vertically that contain not less than 20 pleats per filter.
    b. Rated airflow capacity of the filter shall not be less than 2,000 scfm.
    c. Initial resistance at 500 fpm face velocity shall not exceed 0.27 inches W.C.
    d. Refer to Drawings for required number of filters.
3. Filter media shall have an average arrestance of 90 to 92 percent as determined by ASHRAE test standard 52.1-1992.
4. Media support shall be a welded wire grid with an effective open area of not less than 95 percent and shall be bonded to the filter media to eliminate the possibility of media oscillation and media pull away.

B. A HEPA inlet filter system shall be provided for each blower package as Manufacturer's standard. The filter media shall have an efficiency of 90 percent by weight per ASHRE 52-76 with synthetic dust equivalent to separation > 95 percent @ 1.0 microns.

C. Maximum clean pressure loss across the filter shall be less than 0.12 PSIG.

D. The inlet filter shall be suitable for indoor installation and shall be integrally mounted directly to the blower enclosure. The filter element shall be protected by a wire enclosure for ease of replacement

E. Filter element shall be washable.

F. Provide pressure differential indicating transmitter to monitor pressure drop across the inlet filter.

2.8 FLEXIBLE CONNECTORS

A. Provide each blower with suction and discharge expansion joints, for connecting the blower package to the external suction and discharged pipes, capable of withstanding the vacuum, pressure, and temperature under all operating conditions. The expansion joint shall be included with control rods and carbon steel flanges drilled for ASME/ANSI B16.5, Class 150 bolt pattern.

2.9 BLOW OFF (BYPASS) VALVES

A. Two forms of blow-off shall be acceptable. For each blower, one of the following systems shall be provided.
   1. A three way valve shall be provided with either a pneumatically actuated or a pneumatically operated/electrically actuated pilot solenoid valve. Under low pressure conditions during startup, the solenoid valve shall keep the three way valve sealed to blow off. As the blower reaches acceptable speeds, the pressure in the system shall apply pressure to the solenoid valve diaphragm, resulting in tight seal to the blow off assembly, and fully open the discharge to system. The blow off assembly, including the pilot valve, shall be mounted to the blower by the manufacturer. The solenoid shall be field calibrated by the manufacturer during startup and testing.
   2. A motorized butterfly valve shall be provided. The motorized butterfly valve shall be mounted to the discharge piping of the blower. The contractor and manufacturer shall coordinate to ensure proper installation of the motor operated valve. Control and power for the valve shall be through the internal blower controls. To actuate blow off, the blower controls will close the motor operated valve, and open the blow off assembly. As the blower reaches an acceptable speed, the blower controls will automatically close the blow off and open the motor operated valve.

2.10 DISCHARGE VALVES

A. Provide discharge valves as shown in the drawings. Size of valves inside package system shall be as required by the blower Manufacturer. Valves shall be provided in accordance with the specifications for air service butterfly valves.

2.11 CHECK VALVES

A. Provide discharge check valves as shown on the drawings. Check valves should be suitable for installation in the horizontal position or vertical position.

B. Check valves shall be especially designed and suitable for use with centrifugal blowers and shall retain positive sealing capability at 350 degrees Fahrenheit.

2.12 INLET SILENCER

A. The inlet silencer shall be an annular type dissipative muffler.

B. The muffler shall have a maximum pressure drop of 0.80 inches of water column at the design condition.

C. The muffler shall, at a minimum, provide the following insertion loss:

Octave Band Center Frequency (Hz)	125	250	500	1000	2000	4000

Minimum Insertion Loss (Db)	8	15	25	30	35	30

D. Materials of Construction:
   1. Construct muffler using perforated metal internals and solid casing having a minimum of 14 ga steel with an appropriate high temperature coating. Case shall be constructed to withstand internal pressure of 14 psig.

E. Manufacturer:
   1. Provide one of the following:
      a. Universal Silencer, Division of Nelson Industries, Model SU5
      b. Or approved equal

2.13 BLOW OFF VALVE SILENCER

A. A blow off silencer shall be provided for the blow-off (bypass) valve as Manufacturer's standard. The blow off silencer shall be an integral unit, fitted with a flange for direct bolting to the blow off valve. Silencer shall attenuate noise by at least 45 dB.

2.14 INSTRUMENTATION

A. The blower manufacturer shall provide the blower instrumentation described in this section. Instruments shall be as specified in this section. These components shall be mounted within the enclosure except as noted and as shown on the P&IDs and Drawings.

B. Each blower shall be equipped with an integral Operator Interface Terminal (OIT touch screen) and ControlLogix Programmable Logic Controller (PLC) based control system and integral inverter for motor speed control. All information to be in USA English units of measure.

C. All PLC controls, alarms and monitoring shall be accessible through the OIT.

D. Instrumentation for each blower shall include the following manufacturer standard instrumentation, as a minimum:
   1. Inlet air temperature gauge.
   2. Inlet air temperature transmitter element.
   3. Inlet air filter differential pressure transmitter.
   4. Surge switch (calculated in LOC from VFD current).
   5. Discharge air pressure gauge.
   6. Discharge air temperature element.
   7. Discharge air temperature gauge.
   8. Blower bearing temperature.
   9. Blower bearing vibration.
   10. Discharge air pressure indicating transmitter.
   11. Motor winding temperature elements (1 per phase).

E. LBCP Interface with Existing SCADA System
   1. An interface shall be provided between the Manufacturer-supplied Local Blower Control Panels, and the existing Plant SCADA System. The LBCPs shall include an Ethernet switch, compatible with the Owner's existing Ethernet network, to communicate all data to/from the existing SCADA system via the LBCP. All pertinent

data shall reside in a single data file, in contiguous data registers for single block read capability and another single block write capability. An Excel file shall be provided to the Owner identifying all data and addressing in the processor. All pertinent data shall be included.
2. The Manufacturer shall assist in the coordination and field testing of the data link between the Blower LBCPs and the Plant SCADA System.
3. All PLC source code for each LBCP shall be documented clearly and be provided to the Owner with all configuration files prior to start-up. Any updates or revisions made to the PLC source code during startup and troubleshooting shall be documented clearly and shall be provided to the Owner within 30 days of startup of the blower system.
4. Provide a continuous online uninterruptable power supply (UPS) with true sine wave 120VAC output with 10 minute ride through time with 20% future spare capacity.

2.15 LOCAL BLOWER CONTROL PANEL DESIGN AND TESTING

A. The LBCP shall be a PLC based control panel with processor, I/O cards, communications interfaces, operator display, power supply and other components required for a complete, functioning blower control system.

B. PLC: Allen Bradley ControlLogix or approved equal with the following options:
1. Base Unit: 24VDC Input Power
2. Discrete Inputs (dry contact)
3. Discrete Outputs (24VDC, form "C" relay)
4. Analog Inputs and Outputs (4-20mA)
5. Thermocouple input module
6. RTD input module
7. Ethernet Communications on CPU.

C. Operator interface: Allen Bradley PanelView Plus or approved equal shall be provided with the following options:
1. Touchscreen
2. Ethernet Communications
3. Screen Size: 12"
4. Power Requirements: 120VAC

D. The LBCP will be fed with one 480 Vac, 3 phase power connection. LBCP shall contain distribution components, power supplies and transformers, as required, to derive power for all instruments and equipment provided as part of the blower package.

E. The LBCP design, construction, and testing shall be completed in an ISO 9001 certified shop by the blower Manufacturer.

F. All information to be in USA English units of measure.

G. Control Panel Construction
1. The Manufacturer shall provide a complete and fully functional control system to manually or automatically operate the control system as specified herein. All Manufacturers recommended safety devices shall be provided to protect operators. All control devices, unless specified otherwise, shall be mounted in the Control Panel.
2. The control panel shall consist of a main circuit breaker, circuit breakers for each VFD, motor circuit protectors (MCP) and magnetic starters for auxiliary motors, and a 120-volt control power transformer (fused on primary and secondary). All control

components shall be mounted in one common enclosure. Control switches shall provide means to operate each motor manually or automatically.

3. For NEMA 12 enclosures, the door or panel shall be provided with a pad-lockable vault type 3-point latch. The enclosure shall be equipped with a door and shall incorporate a removable back panel on which control components shall be mounted. Back panel shall be secured to enclosure with collar studs. Door(s) shall be interlocked with main circuit breaker and provided with pad-locking provisions for lock out tag out procedures.
4. All motor branch circuit breakers, motor starters and control relays shall be of highest industrial quality, securely fastened to the removable back panels with screws and lock washers. Back panels shall be tapped to accept all mounting screws. Self-tapping screws shall not be used to mount any component.
5. A thermal-magnetic air circuit breaker shall be provided for the main breaker. All circuit breakers shall be sealed by the Manufacturer after calibration to prevent tampering. Each circuit breaker shall be adequately sized to meet the equipment operating conditions. Motor Circuit Protectors (MCP) shall be molded case with adjustable magnetic trip only.
6. All operating control and instruments shall be securely mounted on the exterior door. All controls and instruments shall be clearly labeled to indicate function. All exterior mounted equipment shall have its NEMA rating match that of the enclosure NEMA rating except where specifically noted otherwise herein.
7. Mode selector switches shall be Hand-Off-Auto type to permit override of automatic control and manual actuation of shutdown. Switches shall be NEMA 4X (800H) providing three (3) switch positions, each of which shall be clearly labeled according to function. Provide contacts as necessary for control and status monitoring as specified herein and as shown on the P&IDs.
8. Indicator lamps shall be LED full voltage type and mounted in NEMA 4X (800H) modules. Lamp modules shall be equipped to operate at 120 volt input. Lamps shall be easily replaceable from the front of the control compartment door without removing lamp module from its mounted position. Indicators shall be provided for individual motor run and an indicator for each failure condition.
9. A six (6) digit, nonreset elapsed time meter shall be connected to each motor starter to indicate the total running time of each motor in "hours" and "tenth of hours". A transmitter shall also be provided to enable data logging of elapsed time.
10. A failure alarm with horn and beacon light shall be provided. Silence and reset pushbuttons shall also be provided. A common failure reset pushbutton shall be provided to reset the alarm conditions (reset shall occur only if fault condition has been cleared). The alarm horn shall be weatherproof rated with gasket. The alarm beacon shall be NEMA 4X rated, red lenses and solid state flasher.
11. The control panel shall operate on a power supply of 480 volts, 3-phase, 60 hertz unless otherwise noted.
12. An emergency stop pushbutton shall be provided. The pushbutton shall be red, large palm, push/pull type with maintained contacts. The emergency stop shall provide hardwired shutdown the blower system and shall not permit restating until the pushbutton is locally reset. Provide contacts as necessary for control and status monitoring as specified herein and as shown on the P&IDs.
13. The control diagrams and overload tables shall be laminated to the inside of the door except where door space is limited the laminated documents shall be in the print storage pocket.
14. Print storage pockets shall be provided on the inside of each panel. Pocket shall be of sufficient size as required to hold all prints necessary to service the equipment. A set

of reduced drawings shall be provided for each panel, fixed to fit in the storage pocket.

15. The LBCP shall be provided with 5 Ethernet 10/100 ports as an unmanaged switch. Manufacturer shall be Phoenix Contact FL Switch SFN 5TX.
16. The control panel shall be provided with lightning and surge protection. The surge protection devices (SPD) shall be mounted within the control panel enclosure. Lead lengths shall not be longer than 12 inches from the main circuit breaker. The SPD shall have minimum surge current capacity rating of 80 kA per phase. The surge protection devices shall be listed in accordance with UL 1449 Second Edition and as defined by IEEE C62.41 and C62.45. The transient voltage surge suppressors shall be for the power supply voltage:
    a. TE/5XF - 480 VAC, 3-Phase
17. Provide wire tags on every conductor. Provide heat shrink sleeve markers. Tags using adhesives are unacceptable.
18. Wiring shall be in accordance with NEC requirements and per UL standards.
19. The control panel shall be provided with nameplates identifying each component, selector switches, pilot lights, etc. Nameplates shall be permanently affixed using an epoxy process (inner door nameplates shall be fastened with stainless steel screws). Nameplates shall be laminated plastic, engraved white letters with a black background.
20. All control panels shall be provided with a master nameplate located on the exterior door as indicated herein and as shown on both the P&IDs and Control System Architecture Diagram.
21. Where applicable provide a nameplate which reads as follows "CAUTION - THIS PANEL CONTAINS A VOLTAGE FROM AN EXTERNAL SOURCE." Letters shall be black on a high visibility yellow background.
22. Corrosion Inhibitor Emitter: Inclusion of an industrial corrosion inhibitor emitter that shall protect internal components of control panel from corrosion for up to one year. One spare emitter shall be provided for each control panel.
23. All control relays shall be have 10 amp rated contacts (minimum), 11 pin with mounting base , 3PDT (minimum), with LED indicators to show relay status, relays shall be manufactured by Potter Brumfield or Approved Equal.
24. Terminal blocks shall be 600 volt heavy duty rated, tubular clamp type. Terminal strips shall be Allen Bradley catalog #1492-CA-1 or Approved Equal. Each terminal shall be individually labeled. Provide fused terminal with neon lamp blown fuse indicator for discrete commons (to provide power for groups of 8 discrete I/O), and fused terminal with LED blow fuse indicator for analog signals/loops.
25. The completed blower package with local control panel assembly shall be U.L. certified.
26. A copper ground bar with sufficient terminals for all field and panel ground connections shall be provided.
27. A copper isolated ground bar with sufficient terminals for all signal shield wires. Shield wires shall be connected to this ground bar at one point only.
28. All signal wiring entering and exiting the control panel shall be provided with surge protection.
29. All wiring within the control panel shall be color coded or coded using electrical tape in sizes where colored insulation is not available. The following coding shall be used. For different system voltages, the color coding shall be as required by the Engineer.

System	Wire	Color
480 Volts 3 Phase	Ground	Green

	Neutral (As Required)	White
	Phase A	Brown
	Phase B	Orange
	Phase C	Yellow
Control (Individual Conductors)	AC	Red
	DC	Blue
	Foreign	Yellow

2.16 MASTER CONTROL PANEL DESIGN AND TESTING

A. A master control panel (MCP) shall be provided for automatic control and monitoring of multiple blower systems. The MCP shall monitor the blower systems and maintain the required pressures or flows of the systems, independently and combined, by adjusting valves, the quantity of blowers in operation, and their speeds.

B. The MCP shall be a complete, functioning control system with a PLC, communications interfaces, operator display, and power supply:
   1. See Local Control Panel Design and Testing section for panel construction and component information not found here:
      a. Panel shall be powered with a 120VAC circuit.
      b. Panel shall be NEMA 12 and floor or wall mountable.
      c. Provide an Allen Bradley ControlLogix PLC platform programmed with RSLogix5000
      d. Provide an ethernet switch with enough ports to connect the PLC, OIT, each blower in the system, a programming computer, SCADA, and a spare port
      e. Provide PLC programming to provide blower balancing control for blowers in multiple systems. Provide OWNER with a copy of the program that includes programming notes and identifications.
      f. Provide an Eaton Powerware uninterruptible power supply (UPS) in the MCP. The unit shall be sized to power the components in the MCP. Provide 30-minute battery.

2.17 SURFACE PREPARATION AND SHOP PAINTING

A. All carbon steel or iron surfaces shall be prepared, shop primed, and finish painted in accordance with the blower Manufacturer's standard practice. Touch-up paint and instructions for application shall be supplied for each paint type.

B. Machine surfaces that are not painted shall be protected in accordance with the blower Manufacturer's standard practice.

C. Paint in accordance with Section 09900.

PART 3 - EXECUTION

3.1 INSTALLATION

A. The blowers, motors, local blower control panels, harmonic filters and all instrumentation, and appurtenances shall be installed in accordance with the instructions of the Manufacturer.

B. The blower system startup shall be executed in conjunction with Owner's personnel to coordinate loop-tuning activities so that the entire aeration system works in harmony.

C. Provide a certificate stating that the installation of the equipment is satisfactory, that the equipment is ready for operation and that the operating personnel have been suitably instructed in the operation and care of each unit.

D. Field tests shall not be conducted until such time as the entire installation is complete as certified by the manufacturer's on-site representative and is ready for testing.

3.2 FACTORY INSPECTION AND TESTS

A. Upon completion of assembly, each blower package (including the harmonic filter) shall be functionally tested at the place of assembly. Owner reserves the right to witness this test, or to provide an independent representative. Provide 4 weeks prior notice, in writing, for the witnessing of tests.

B. At a minimum, the blower and motor package shall be factory tested for a duration of not less than 8 hours at maximum load and ambient temperature.

C. Each entire blower package, blow-off valve, discharge valve, harmonic filter, and LBCP, shall be tested as an operational system before shipment. The LBCP shall be connected to all enclosure instruments, electric valves, and appurtenances. All start/stop and running sequences and all safety and alarm systems shall be tested. The Engineer shall sign the test procedure and results, certifying that the assembled blower, auxiliaries, blow off valves, discharge valves, and LBCP were tested together, as a system, in the blower Manufacturer's shop.

D. Upon completion of assembly, each blower package shall be performance tested at the place of manufacture, witnessed by representatives of the OWNER and a Licensed Professional Engineer experienced in testing requirements of ASME PTC-10. The Witnessing Professional Engineer shall sign, stamp and date the test procedure and results, certifying that the assembled systems were tested together, as a system, in the blower manufacturer's facility.

E. Performance testing shall utilize PTC-10 – 1997 "Type 2" test as referenced section 3.2.2. An open loop configuration shall be used as defined in PTC-10 figure 4.5. Where impractical inlet piping shall be omitted and calibrated equipment shall be used to determine inlet conditions to the equipment. Flow measurement shall be made at the discharge per PTC-10 sec. 4.8.

F. All test equipment shall be calibrated and certified by an independent test agency no more than 12 months prior to the test date. Certificates shall show the stability of calibration over a period of at least one year per ISO 9001, Paragraph 4.11.

G. The discharge conditions are defined as the conditions that exist at the discharge connection of the blower package at the typical point of connection to the air piping supplied by others.

H. At a minimum, the blower system shall be factory tested for a duration of not less than 4 hours at maximum load and maximum temperature.

I. A power meter calibrated to NIST standards, instantaneously monitoring all electrical legs for voltage and amperage to calculate instantaneous power usage, shall measure the electrical power input to the complete blower package as described, including all auxiliary systems. Measured power shall include wire-to-air and include all losses associated with electrical power, including, but not limited to the motor, inverter, and cooling system, if used.

J. The Witnessing Professional Engineer shall sign each copy of the test data log sheet certifying that the required tests were performed in strict accordance with these specifications and the ASME PTC 10.

K. Velocity vibration versus frequency levels shall be recorded within 10-1,000 and 10-10,000 Hz frequency range. Vibration shall be reported velocity (in/sec) versus frequency.

L. The blower test report shall present computations in exact accordance with Section 5, 6, and 7 of ASME PTC 10 Code with performance curves showing flow, pressure, and power inputs.

M. Test results, certified calibration records for all equipment used and signed/stamp test log shall be submitted for approval prior to blower shipment.

N. Test results of the motors and blowers shall be included in the Operations & Maintenance Manual.

O. Harmonic Filter:
   1. The harmonic test shall be performed at the factory to verify compliance with IEEE 519, 1992.

3.3 FIELD TESTING

A. Field acceptance testing shall be conducted after the installation of all equipment has been completed (and certified by the blower Manufacturer) and all instrumentation calibrated and working as intended and the equipment has operated for a sufficient period to make all desirable corrections and adjustments. Provide written documentation for check out including who performed the work, when performed, what was final setting or tolerance and who witnessed the final settings.

B. The field acceptance tests shall be made under the direct supervision of a qualified representative of the blower Manufacturer and in the presence of and as directed by the Engineer. Written test procedures shall be submitted to the Engineer for approval 30 days prior to testing.

C. Confirm proper wiring of all instruments and field wired items.

D. For each blower package, a minimum eight hour field operational test shall demonstrate that, under all conditions of operation, each unit:
   1. Has not been damaged by transportation or installation.
   2. The blower package (including piping, valves, instruments, controls, wiring, and accessories) have been properly installed.
   3. Has been installed level.
   4. Has no mechanical defects.
   5. Has fully functional instrumentation that are properly calibrated and set.
   6. Will start, run, and stop in the prescribed manner.
   7. Will run through the entire range of specified pressure and flow.
   8. Has the proper shutdown sequence of standard stop, soft stop, and emergency stop.
   9. All blower interlocks and faults have been tested.
   10. Blower process control in all operational modes and levels.
   11. Is fully integrated with the existing SCADA system such that all operating sequences can be initiated remotely from the SCADA system, and such that all monitoring data is available at the SCADA system.
   12. Demonstration of communication and operation between LBCP and the SCADA system for all start/stop commands and operational setpoints.
   13. Is free of overheating of any parts.
   14. Complies with the project vibration and noise specifications.

E. In addition, each blower package shall be field tested for a duration of not less than 24 hours at maximum load and maximum temperature.

F. Noise Level: The blower Manufacturer shall include all necessary provisions for reducing noise to meet the maximum sound pressure level requirements of this section. The maximum noise level at any point at a distance of 3 feet or more from any blower/motor surface shall not exceed 80 dBA with the blower running at any speed, except during startup and shutdown sequences. The noise level shall be measured during the preliminary equipment tests of field testing after installation with one, two and three blowers running. Manufacturer shall provide the necessary instruments to conduct noise level measurement. If it is found that the actual sound pressure level 3 feet away from the blower exceeds the maximum specified sound pressure level, the blower Manufacturer shall make such modifications and additions as approved by Engineer as are necessary to limit the noise to 80 dBA.

G. During the field acceptance tests, readings shall be taken at 30-minute intervals and recorded on suitable log sheets. These readings shall include data from pressure and temperature gauges, driver output rpm's, relative humidity readings, power kW and all other information necessary to calculate the actual performance characteristics of the blower, driver and ancillary equipment. A written report shall be submitted to the Engineer tabulating equipment tested, test results, problems encountered and corrective action to be taken within 2 weeks after test completion.

H. Field acceptance tests and testing procedures shall be mutually arranged and coordinated with the Owner’s plant personnel and representatives. Schedule testing procedures, with the full knowledge and consent of the Engineer, and shall not adversely affect the operation of plant facilities.

I. If any unit fails to fulfill the performance required by the requirements specified, corrective measures shall be taken and the units retested to assure full compliance with this Section. A revised written report shall be submitted to the Engineer. All costs

associated with the field tests including those associated with any required corrective action, shall be borne by the blower Manufacturer.

J. A 7-day operating period of stable and vibration-free operation shall be required for each blower unit prior to final acceptance. Parallel operation of multiple blowers for a 7-day operating period of stable and vibration-free operation shall be required prior to final acceptance.

++END OF SECTION++

SECTION 11371

SINGLE STAGE CENTRIFUGAL AIR BLOWERS

PART 1 - GENERAL

1.1 DESCRIPTION

A. Scope:
   1. Provide all labor, materials, equipment and incidentals as shown on the Drawings, specified and required to furnish and install single stage centrifugal air blowers complete and operational with motors and all appurtenances as shown on the Drawings and as specified. Anchor bolts are included in this Section.
   2. Included, but not limited to, are the following components for each unit:
      a. Blower.
      b. Electric motor.
      c. Coupling and common base.
      d. Accessories as specified.
      e. Control panel (common or individual as specified).
   3. The extent of the equipment is shown on the Schedule of Service Conditions contained in Part 2 of this Section.

1.2 QUALITY ASSURANCE

A. Manufacturer's Qualifications:
   1. Manufacturer shall have a minimum of five years experience of producing substantially similar equipment and shall be able to show evidence of at least five installations in satisfactory operation for at least five years.

B. Component Supply and Compatibility:
   1. Obtain all equipment included in this Section regardless of the component manufacturer from a single blower equipment manufacturer.
   2. The blower equipment manufacturer shall review and approve or shall prepare all Shop Drawings and other submittals for all components furnished under this Section.
   3. All components shall be specifically designed for the specified service and shall be integrated into the overall equipment design by the blower equipment manufacturer.

C. Coordination Meeting:
   1. A coordination meeting shall be scheduled 20 days from the Notice to Proceed and held in the OWNER's offices. The purpose of this meeting is to discuss all aspects of blower instrumentation and control. Manufacturer's representatives shall be in attendance.

D. Source Quality Control:
   1. Blower Tests:
      a. Test each blower as specified below and in accordance with applicable requirements of the ASME Power Test Code 10 for Centrifugal Compressors and Exhausters. Tests shall employ the torque meter method as described in Paragraph 4.35 of the code. No other test method is acceptable. The test results shall be reported in accordance with this code. Use the job motor or a test motor for testing of electric motor driven blowers.
      b. All gauges and other test instruments shall be calibrated within 30 days of the scheduled test dates and certified calibration data shall be provided.
      c. Inlet Guide Vane Control:
         1) Develop the characteristic curve of the blower with minimum five test points at 100 percent setting of the inlet guide vanes. Two points shall straddle the design point within approximately ±4 percent. Flows shall range from surge to 120 percent of the design flow. Power input shall be recorded at the test points.
         2) Define each evaluation condition by two points at a reduced guide vane setting. These points shall straddle evaluation flows within approximately ±4 percent. In addition, surge points shall be taken at these settings of the guide vanes to define the blower surge line.
         3) Test additional reduced guide vane positions to verify that the blowers will not surge when operating at design discharge pressure and varying air capacity between 45 and 100 percent of the rated inlet volume.
      d. Diffuser Vane Control:
         1) Develop the characteristic curves of each blower with diffuser vane control for the specified requirements.
         2) Take minimum three points each at the maximum and minimum positions of the diffuser vanes including the surge points.
         3) Define each evaluation condition by two points at reduced diffuser vane setting. These points shall straddle the evaluation points within approximately ±4 percent. In addition, surge points shall be taken at these settings of the diffuser vanes to define the surge line.
         4) The test curves shall demonstrate the safe operation of each blower with varying air flow rates between 45 and 100 percent of the rated design air flow at a constant discharge pressure equivalent to the design discharge pressure.
      e. Dual Vane Control:
         1) Develop the characteristic curves of each blower with dual vane control for the specified requirements.
         2) Keeping the inlet guide vanes fully open, take three points each at the maximum and minimum positions of the diffuser vanes including the surge points.
         3) Keeping the inlet guide vanes at minimum position, take three points each at the maximum and minimum positions of the diffuser vanes including the surge points.

4) Demonstrate that the electric motor will not be overloaded while the unit is operating at minimum ambient temperature, maximum discharge pressure, and at the maximum positions of the inlet guide vanes and the diffuser vanes based on the proposed control system.
5) The test curves shall show the safe operation of each blower with varying air flow rates between 45 and 100 percent of the rated design air flow at a constant discharge pressure equivalent to the design discharge pressure.

f. Determine blower efficiencies from the test data and draw efficiency curves. The power draw shall be recorded at all test points.

g. Record vibration levels of the housing and the shaft of the unit during a minimum of six test points. Filtered vibration taken on the housing or bearing caps shall not exceed 0.1-inch per second. The double amplitude of vibration in any plane measured on the shaft adjacent and relative to each radial bearing shall not exceed the following value or 2.0 mils, whichever is less:

$$\text{Allowable unfiltered vibration (including runout)} = 1.25 \cdot \frac{\sqrt{12,000}}{\sqrt{N}}$$

Where, N = maximum impeller speed.

h. Temperature of the bearing contact surfaces near the end of the test run shall not exceed 215°F.

i. Hydrostatically test blower casing at a minimum test pressure of 25 psig for a duration of half hour. Provide a certification of this test. The casing shall be left unpainted during the performance and pressure tests. The magnetic particle test, if used, shall be in accordance with ASTM E 109.

j. Test the impeller in excess of 120 percent of the design speed, after which it shall be carefully inspected for defects by the Zyglo method or equivalent.

k. Perform a shop test for sound pressure level. Tests and decibel ratings shall be in conformance with ANSI Standard 55.1-1971. The overall sound pressure level shall be taken at points evenly spaced around each blower and motor assembly and at five feet from the nearest part of the units. Sound level shall not exceed 90 decibels at five feet distance measured on the A-weighted scale without an acoustical enclosure.

l. Each test shall be witnessed by a Registered Professional Engineer, who may be an employee of the manufacturer. The Registered Professional Engineer shall certify that all required tests were performed. The Registered Professional Engineer's certification shall show state of his registration, registration number and name on the seal shall be clearly legible. Certification shall show the serial numbers of all equipment tested. If the results of these tests indicate that the blowers do not meet the Specifications, they shall be modified and retested until they do. If the blowers do not meet the specified maximum power draw, OWNER

reserves the right to reject the blowers or to accept the blowers at a lower cost to be determined as specified herein.

2. Motor Tests:
   a. All motors shall be completely assembled at the factory and shall be given routine tests conducted in accordance with NEMA Standards MG1-20.46 which includes the following tests:
      1) No load current.
      2) Winding resistance.
      3) High potential dielectric tests.
   b. Each motor shall have its efficiency tested in accordance with IEEE Procedure 112. Efficiencies shall be determined at 1/2, 3/4, and full load. The following additional tests shall be conducted in accordance with NEMA MG1.
      1) Temperature rise.
      2) Percent slip.
      3) Check current balance.
      4) Measure air gap.
      5) Locked rotor pull-up and break-down torque.
      6) Pull out torque (calculated from locked rotor test).
      7) Power factor at 1/2, 3/4, and full load.
      8) Bearing inspection.
      9) Resistance of armature and field.
      10) Polarity of field coils.
      11) High-potential test on field and armature.
      12) Starting characteristics including starting and accelerating torque, and current by the reduced voltage method.
   c. Conduct a no-load noise test in accordance with IEEE Standard 85. Test results shall meet the requirements of these Specifications.
   d. Testing shall demonstrate that the vibration with the motor bolted to a steel floor, stator at design temperature, motor shaft extension with half-key, and lubrication at normal operating temperature shall not exceed 0.10 inch/second at rotational frequency and at all multiples through 120 Hz and one half of rotational frequency or 0.15 inch/second unfiltered. Vibration shall be as measured in any plane on bearing caps of both ends. Stator temperature for vibration tests may be accomplished by restricting cooling air flow or by other industry standard methods; however, the motor manufacturer shall evaluate all effects of the method of testing, and vibration readings shall be taken while air flow is not restricted. During the testing, the motor shall be complete and shall have nothing removed for convenience, except the power lead conduit box.
   e. Copies of the test results for each motor shall be certified by a responsible test Engineer. The test results shall be submitted to ENGINEER for review and approval prior to the shipment of the motors.
3. Control Panel Tests:
   a. The control panels shall be tested in the factory in accordance with the requirements of Section 13321, Instrumentation and Control System General Requirements.

4. Visual Inspection: Verify that equipment complies with Specifications and approved Shop Drawings.
5. Packing:
   a. Inspect prior to packing to assure that assemblies and components are complete and undamaged.
   b. Protect machined surfaces and mating connections.
   c. Protect bearings and gearing with a shop applied corrosion prevention coating.
   d. Cover all openings into gear boxes with vapor inhibiting and water repellent material.
   e. Adequately crate to prevent damage during shipment, delivery and storage.
   f. Identify crate contents on packing slip fastened to the outside of crate.

E. Reference Standards: Comply with applicable provisions and recommendations of the following, except as otherwise shown or specified.
1. National Electrical Code (NEC) current adoption.
2. National Electrical Manufacturers Association.
3. Institute of Electrical and Electronic Engineers.
4. ASME Power Test Code for Centrifugal Compressors.
5. AWS D1.1, Structural Welding Code.

F. Maximum Power Input Requirement:
1. The average of the KW draw of each electric motor driven blower unit at the Design Condition and at seventy percent of the design capacity shall not exceed the maximum specified. The average input horsepower for each engine driven blower at the Design Condition and at seventy percent of the design capacity shall not exceed the maximum specified. The motor horsepower of the oil pump, if provided with a separate motor, shall be included. Average as defined as:

$$\frac{\text{Max. KW draw @ 100\% + Max. KW draw @ 70\%}}{2}$$

G. Penalty for Non-Performance:
1. If more than one blower of any size fails to meet the maximum specified power input, the OWNER, at its option, may require complete replacement of all of the equipment by CONTRACTOR, or may accept all of the equipment for the lower cost provided by assessment of a non-performance penalty for each failed blower.
2. The average of the KW draw of each electric motor driven blower unit at the Design Condition and at seventy percent of the Design Condition, as determined from the shop tests, must be equal to or less than the maximum specified average of the KW draw at the Design Condition and at seventy percent of the design capacity. No design or measuring tolerances will be permitted. If the average KW draw of the blower motor and appurtenances, as determined from the shop tests, is greater than the maximum specified

average KW draw, an assessment of $(--2--) for each KW above the maximum specified average KW draw for each deficient blower unit shall be made.

H. Unit Responsibility: Assign Unit Responsibility as specified in Section 01600, General Equipment Provisions, to the manufacturer or supplier for the equipment specified in this Section. A Certificate of Unit Responsibility shall be provided.

1.3 SUBMITTALS

A. Shop Drawings: Submit for approval the following:
   1. A complete and detailed submittal indicating equipment and controls to be provided, as well as system operation and sequencing, prior to equipment fabrication.
   2. Manufacturer's literature, illustrations, specifications and engineering data.
   3. Drawings showing fabrication methods, assembly, accessories, installation details and wiring diagrams.
   4. Setting drawings, templates, and directions for the installation of anchor bolts and other anchorages.
   5. Drawings of control panels, including instruments, panel wiring, and Programmable Logic Controllers (PLC) (if required) furnished in accordance with the requirements of Division 13, shall be furnished. Also, drawings of control panels shall be furnished in accordance with the requirements of Division 13.
   6. PLC input and output identification and register location.
   7. The performance curves of the blowers at the specified operating ranges in Paragraph 2.1.B., below, including brake horsepower curves.

B. Supporting Data: In addition to Shop Drawings required above, submit the following data and information:
   1. Computations showing the manufacturer's maximum power input at both the design condition and at 70 percent of the design capacity for each size blower unit.
   2. The overall efficiency and power consumption of the blower units shall be taken as the power input to the blower test motor, with auxiliary equipment attached and operating, as determined from the shop test. The efficiency data of the test motor shall be submitted.
   3. A complete list of all equipment to be furnished and the manner in which it will be shipped; e.g. blower, motor and coupling mounted on base plate and shipped as one unit; blower, motor, etc., shipped separately. The list shall be specific to quantities included.
   4. Name of the manufacturer of each major piece of equipment proposed, and country in which it will be manufactured.
   5. Weight of each blower unit including motor, common base plate and lubrication system.
   6. A statement of the torsional and lateral critical speeds of each blower system mounted on the common baseplate.

7. For each motor furnish a certified motor data sheet or a certified motor data sheet from a previously manufactured electrically duplicate motor which was tested. Provide the following minimum data:
   a. Starting torque.
   b. Efficiency at 1/2, 3/4 and full load.
   c. Power Factor at 1/2, 3/4 and full load.
   d. Percent slip.
   e. Running light, full load and locked rotor current.
   f. Temperature rises and results of dielectric tests.
   g. Bearing type and lubrication medium.
   h. Insulation and enclosure type.
   i. Motor type and frame size.
8. For each blower motor the following additional data shall be provided:
   a. Time versus current curve showing maximum safe stall time and acceleration time versus current at the reduced voltage, based on load WK^2 and starting from normal rated conditions.
   b. A curve of speed versus torque, current and power factor from zero to rated speed under starting conditions.
   c. All curves shall indicate motor WK^2, specification and tag number.
   d. Outline drawing or an outline data sheet showing complete motor dimensions with complete motor data.
9. A description covering the shop testing procedures for the blowers, motors and control panels.
10. The following data for the blowers:
    a. WK^2 of the blower.
    b. Balancing tolerance either in inch-ounces or mils deflection.
    c. Description of maintenance procedure to be followed if rebalancing of blower becomes necessary.
    d. General description and descriptive calculations of the design reserve capacity of axial thrust bearings.
    e. Speed-torque curve for the blower with guide vanes in starting position.
    f. A statement of the expected bearing life for each type of bearing provided.
11. Description of the protective coating system to be used for the blower, motor, engine, base plate and appurtenances.
12. A statement of the expected job site sound level of the blower and electric motor assembly without an acoustical enclosure at five feet from the units, measured in decibels in the A-weighted scale.
    a. The statement shall be accompanied by a witnessed sound pressure level test report for each size unit with a common-base-plate-mounted blower and motor, unsilenced, of the identical type and size, or a size ranging from thirty-five percent lesser to thirty-five percent greater than the units specified. The test shall have been performed in accordance with ANSI Standard S1.11-1966 and signed by a Registered Professional Engineer who may be an employee of the manufacturer.
    b. In lieu of the witnessed sound pressure level test report required above, the manufacturer may submit a notarized affidavit guaranteeing that he will perform any remedial work on the blower and motors that may be

required to achieve the sound pressure level, specified in Paragraph 1.2.D., above.

c. Remedial work shall be limited to internal areas of the blowers or motors or external applications of sound deadening media. Remedial work consisting of sound deadening enclosures or structures erected around the units will not be acceptable.

13. A list of installations in which equipment of this type and approximate capacity has been successfully supplying air for the activated sludge wastewater treatment process or for other processes requiring gas compression, and a statement indicating the length of time that the equipment has been in service.
14. Acoustical performance data for panels of acoustical enclosure.
15. Include the following information in the submittal for the PLC:
    a. Manufacturer's data sheets and catalog literature.
    b. Description of on-line diagnostic tests and off-line tests.
    c. Dimensional data on PLC equipment.
    d. Addressing system and card layout, including special configuration rules and limitations.
    e. Interface and cable data.
    f. Hardware manuals.
    g. Electrical characteristics and protection provided for each component.
    h. Indicate modularity of I/O modules.
    i. Manufacturer's installation instructions for grounding and power conditioning requirements, if any.
    j. Description of how the PLC works. Include a description of the PLC input/output functions, control capabilities, and configuration procedures.
    k. Description of how faults are detected, isolated and corrected.
    l. Configuration of specific applications(s) with I/O listings, ladder logic, ampacity and impedance coordination and register locations.
    m. Relay ladder logic application programming manual.
16. Include the following information in the submittal for the development system.
    a. Description of hardware, software and documentation.
    b. Provide two copies of reference documentation for application software development. These are in addition to other documentation requirements and are to be provided at the time of the development system delivery.
17. Listing of manufacturer's recommended spare parts.
18. Three fully annotated printouts of the PLC program including the following:
    a. A memory map with descriptions of each word and file.
    b. A full cross reference report with descriptions for each bit and word address.
    c. A ladder logic diagram with descriptions of each rung of logic. The ladder logic diagram shall also be broken into segments and a table of contents provided showing the page number of each segment.
19. Three floppy disks or CD's with the full PLC program and documentation. This documentation shall be compatible with the IBM AT microcomputer and software package provided for the development system.

C. Shop Test Results:
   1. Submit results of all blower shop tests required.
   2. Submit results of all electric motor shop tests required.
   3. Submit results of all control panel shop tests required.

D. Field Test Results:
   1. Submit a written test procedure and report giving the results of the field tests required.

E. Operation and Maintenance Manuals:
   1. Submit complete installation, operation and maintenance manuals including test reports, blower curves, trouble-shooting guide, maintenance data and schedules, description of operation and spare parts information.
   2. Furnish Operation and Maintenance Manuals in conformance with the requirements of Section 01330 Operation and Maintenance Data.

F. Provide manufacturer's certificate(s) of proper installation.

1.4 PRODUCT, DELIVERY, STORAGE AND HANDLING

A. Deliver materials to the site to ensure uninterrupted progress of the Work. Deliver anchor bolts and anchorage devices which are to be embedded in cast-in-place concrete in ample time to prevent delay of that Work.

B. All boxes, crates and packages shall be inspected by CONTRACTOR upon delivery to the site. Notify ENGINEER if any loss or damage exists to equipment or components. Replace loss and repair damage to new condition, in accordance with manufacturer's instructions.

C. Store materials to permit easy access for inspection and identification. Keep all material off the ground using pallets, platforms, or other supports. Protect equipment including packaged materials from corrosion and deterioration.

PART 2 - PRODUCTS

2.1 SERVICE CONDITIONS

A. General: Design equipment to be suitable for the process and service conditions described below and in Schedule of Service Conditions:
   1. Blowers shall be designed for continuous 24 hour per day, seven day per week operation, shall be suitable for the process and service conditions described below and in the Schedule of Service Conditions.

B. Design Requirements:
   1. Environmental conditions:
      a. Elevation: 1100 feet (above seal level)
      b. Inlet air temperature range:

1) Average Conditions: 95 °F
2) Summer Conditions: 115°F
3) Winter Conditions: 35 °F

c. Relative humidity range:
1) Average Conditions: 30%
2) Summer Conditions: 30% to 70%
3) Winter Conditions: 5% to 60%

2. Quantity of blowers:
a. Jet Aeration Blowers 5 ea (4 duty, 1 standby)
3. Air flow rate per blower (continuous):
a. Jet Aeration Blowers 7,900 acfm/ea
4. Differential pressure:
a. Jet Aeration Blowers 6.0 psi

C. Motor Design Requirements:
1. The high-speed permanent magnet type motor shall be as follows:
a. Motor horsepower per blower: 350 hp maximum
b. Volts/Phase/Hertz: 480 volts/3 phase/60 hertz
c. Motor speed: 8,500 rpm maximum
d. Enclosure: IP33D

* SCFM is defined as air at 14.7 psia, 68°F and 36 percent relative humidity.
** ACFM is defined as air at designed pressure, temperature and humidity.

2. The blower capacity shall be corrected for the pressure loss from the building intake to the blower inlet to obtain the air flow rate at the blower inlet.
3. The following formula shall be used to convert the standard air flow (SCFM) to actual air flow (ACFM):

$$ACFM^{**} = SCFM^{*} \times \frac{T_1 \times P_b \times [P_s - (RH_s \times PV_s)]\, MW_{air} + [RH_s \times PV_s]\, MW_{wat}}{T_s \times P_1 \times [P_b - (RH_1 \times PV_1)]\, MW_{air} + [RH_1 \times PV_1]\, MW_{wat}}$$

Where P_s = Pressure-Standard Condition, 14.7 psia
T_s = Temperature-Standard Condition, 528°R
RH_s = Relative Humidity-Standard Condition, 0.36
PV_s = Vapor Pressure of Water at T_s, 0.3391
T_1 = Design Temperature
P_1 = Pressure at Blower Inlet
RH_1 = Relative Humidity-Design Condition

PV_1 = Vapor Pressure of Water at T_1

P_b = Barometric Pressure

MW_{air} = Molecular Weight of Air, 28.97

MW_{wat} = Molecular Weight of Water, 18.02

D. Specific Requirements:
   1. Each electric motor driven blower shall not require more than 350 horsepower at the Design Condition.
   2. Each electric motor driven blower shall not have a noise level greater than 90 dBA, emanating from the blower and motor at a distance of five feet from the blower and motor, after taking into consideration the background noise.
   3. At sixty percent of design flow, along the design curve, the blower, under the specified inlet conditions, shall develop at least 5.7 discharge pressure and shall not be in surge, or overload the motor.
   4. Each electric motor driven blower shall be capable of accelerating from zero to normal speed within fifteen seconds.

2.2 DETAILS OF CONSTRUCTION - BLOWER

A. Base:
   1. Mount each blower and its electric drive motor on a common, welded structural ASTM A 36 steel base. Fabricate the base of structural members or heavy steel plate and strongly reinforce to make it rigid.
   2. Welding shall conform to the AWS or equal National Code. Provide a sufficient number of leveling screws and subsole plates located around each anchor bolt for ease of alignment of the blower/motor assembly.

B. Casing:
   1. Casing shall be of close grained gray cast iron, conforming to ASTM A 48, Class 30, or modular iron conforming to ASTM A 536, Grade 60-40-18. Both inlet and discharge connections shall be cast integrally with the casing, and shall be machined and drilled accurately to ANSI Standards. Provide the casings with starting screws and eye-bolts or lugs for lifting.

C. Shaft:
   1. Shaft shall be of high-grade steel single forgings, conforming to ASTM A 471 or A 237, annealed, or equal, finished all over and accurately ground to gauge where necessary.
   2. Shaft shall be of the stiff or flexible shaft design with the first critical speed at least 20 percent removed from the operating speed. Renewable shaft sleeves shall be provided at close clearance points, and at all points subject to abrasion, erosion and corrosion. Shaft seals shall be accessible for inspection and ready replacement.

D. Impeller:
   1. Impeller shall be radial or backward leaning type of aluminum alloy or machined from alloy steel, conforming to ASTM A 471, or equal, heat treated, or of 17-4 PH stainless steel, secured to the shaft in an approved manner to withstand all working stresses, and in particular, stresses incident to the starting of the blower.
   2. Impeller shall be statically and dynamically balanced and tested for operation at operating speeds.
   3. Perform a lateral critical speed and composite torsion analysis of blower and driver. There shall be no torsional critical speeds within the operating range of the unit.

E. Bearings:
   1. Provide each blower with pressure oil lubricated bearings designed for a minimum service life of ten years. High and low speed pinion bearings shall be precision sleeve type. High speed thrust bearings shall be double acting. Anti-friction bearings are not acceptable.
   2. Provide dual type 100 ohm platinum resistance temperature detectors (RTD's) and vibration transducers as specified in Section 17052, Process Control System Primary Sensors and Field Instruments, in each bearing and wired to the termination terminal box.

F. Lubrication:
   1. Provide a factory assembled pressure lube oil system with each blower unit. Each system shall consist of two pumps, oil reservoir, two filters, strainers, appurtenances and an oil cooler. The oil cooler shall supply clean oil at suitable pressure to lubricate the blower bearings and speed increasing gears and bearings. All components, except the oil cooler, shall be installed on or integral with, the blower baseplate and be arranged to permit ease of accessibility for operation, maintenance, inspection and cleaning.
   2. Valved vent connections and any necessary piping shall be designed to facilitate cleaning, filling and draining of idle equipment during blower operation. Adequate unions shall be provided to allow easy disassembly of all piping. Piping shall be hydraulic tubing.
   3. Pumps: The main lubrication oil pumps shall be of the positive displacement type, positively driven from the drive train and of adequate capacity to supply the lubricating requirements of the blower and speed increasing gears. An electric motor driven auxiliary oil pump shall be provided to obtain an adequate oil pressure at the bearings immediately prior to blower startup, until the main oil pump has built up sufficient pressure, and during shutdown. The auxiliary oil pump shall have the same capacity as the blower driven oil pump. Motor shall be suitable for operation on 480 volt, 3 phase, 60 Hz power.
   4. Oil Reservoir: Size oil reservoir to hold a minimum of five times the gallon per minute requirements of the blower and motor; with necessary devices for checking oil level, and with drain and cleaning openings. Furnish lube oil electric immersion heater for 480 volt, 3 phase, 60 Hz operation, complete with control thermostat, and magnetic contactor. Interior of oil reservoir shall

be descaled and rust proofed by the manufacturer's standard permanent coating. Reservoirs with top mounted equipment shall have sufficient rigidity to prevent sagging and vibration. Any equipment attached to the top of the reservoir shall be mounted by means of pads to ensure that no tapped holes will extend into the reservoir. Seal each reservoir against the entrance of dirt, water or other contaminants. All cover openings shall be gasketed. Both intake and return shall be brought below minimum working fluid level. Reservoir shall be baffled to minimize air entrainment and isolate foam. Provide the fill opening with a strainer. Supply a sight gauge oil level indicator and low level switch for each reservoir and equip each reservoir with a suitably sized vent and breather filter.

5. Oil Filters: Provide two parallel full flow oil filters of the replaceable cartridge type, each capable of removing particles over ten microns with a clean oil filter pressure drop not to exceed five psi at design temperature and flow. Filter cases and heads shall be of steel and shall be suitable for operation at a pressure not less than the relief valve setting of the positive displacement oil pumps. Filter cartridge materials shall be corrosion resistant to water in the oil. Oil filters shall be replaceable (one at a time) while operating.
6. Strainers: Strainers shall be manually cleaned type and equipped with magnetic trap. Design and installation shall permit ready access for cleaning.
7. Oil Cooler:
    a. Air Cooled Oil Cooler:
        1) General: Provide a remote located air cooled oil cooler suitable for outdoor service with electric motor driven electric fan. Cooler shall be capable of maintaining the required cooling rate at all ambient temperatures up to 120°F. Provide a self-contained temperature regulator to by-pass the cooler until the lube oil reaches normal operating temperature.
        2) Cooler shall have a welded and bolted steel frame, plenum chamber, fan ring, lifting lugs, core guard, fan guard, and fan drive suitably supported. Core shall be horizontal for vertical air discharge with continuous copper plate fins, solder bonded to flat brass tubes. Manifold tanks shall be removable to allow access to tube ends for inspection and clean-up. The core shall be pitched and shall have suitable drainage connections.
        3) Fan: The fan shall be forced draft, air foil section type, with aluminum blades. Provide low tip speed for quiet operation.
        4) Motors:
            a) Motors shall conform to the requirements of Section 11000, Electric Motors.
            b) For integral-horsepower ratings, motors shall be high efficiency, TEFC, Class H insulation with 1.15 service factor, solid shaft, ball bearing type. Motor thrust bearings shall be adequate to carry continuous thrust loads under all conditions of service, minimum B-10 life of 100,000 hours.
            c) For fractional-horsepower ratings, motors shall be high efficiency, totally enclosed, Class B insulation with minimum 1.15 service factor, solid shaft, ball bearing type.

5) Product and Manufacturer: Provide one of the following:
   a) Young Radiator Company.
   b) Or equal.

b. Water Cooled Oil Cooler:
   1) Water Cooled Oil Cooler:
      a) General: Provide a water cooled oil cooler mounted on the blower skid. Cooler shall be capable of maintaining the required cooling rate at all ambient temperatures up to 120°F. Provide a self-contained temperature regulator and on-off solenoid valve (energize to close) to by-pass the cooler until the lube oil reaches normal operating temperature, and to maintain oil temperature.
      b) Controls for Oil Cooling System:
         1. The oil cooler solenoid valve shall be deenergized when the blower is called upon to operate. The oil cooler shall operate continuously to maintain a maximum oil temperature of 135°F. Shutdown of the blower shall energize the solenoid valve and the oil cooler.
      c) The water cooled oil cooler will utilize treatment plant effluent with a chlorine residual of 2 mg/l maximum and a delivery pressure of 80 psig maximum. The blower supplier shall provide any pressure regulators required.
      d) The oil cooler shall not require more than 30 gpm continuous flow.

G. Seals:
   1. Provide a labyrinth seal where the rotor shaft passes through the casing to limit air leakage along the shaft. Provide a combination of oil slingers and labyrinth seals to prevent oil leakage from the gearbox. All seals shall be readily replaceable.

H. Speed Increasing Gears:
   1. Speed increasing gears, shall be of the single or double helical, parallel shaft type. All gears shall be manufactured in accordance with the American Gear Manufacturers Association requirements including "Standard Specification for Measurement of Sound on High Speed Helical and Herringbone Gear Units, (AGMA 6025-C90).
   2. Gears shall be of ample size and rating to transmit the maximum torque and horsepower input requirements to the blower under all operating conditions with a minimum efficiency of 96.0 percent. The service factor for rating the gears shall be a minimum of 1.5 applied to the full load horsepower of the blower motor manufacturer's nameplate rating. Gears shall be rated for continuous duty with ambient temperatures ranging from 40°F to 120°F. Coat all exposed machined surfaces with a corrosion resisting compound for shipment.
   3. Housing: The gear drive housing shall be integral with the blower, of high grade cast iron, and sufficiently rigid to maintain the shaft positions under maximum loads. Gear housing assemblies shall be accurately machined to close tolerances for bearing fits, gear alignment and oil tightness. The housing shall be split to facilitate inspection of the internals.

4. Bearings: Bearings shall be of bronze or the split sleeve steel backed, babbitted type with adequate provision for lubrication and shall be replaceable without removing the rotors.
5. Gearing: Gears shall be made of alloy steel forgings with the gear teeth precision hobbed and shaved. Gears shall be manufactured to a minimum AGMA quality number of not less than 12 as specified in AGMA 390.03.
6. Shafts: Shafts shall be high quality heat-treated alloy steel of sufficient diameter and strength for the service intended. Rotating elements shall be dynamically balanced.

I. Blower Air Vanes: Provide each blower with either an adjustable air diffuser vane assembly, or an inlet air guide vane assembly, or both the inlet and diffuser vane assemblies.
   1. Adjustable Air Diffuser Vane Assembly:
      a. Mount adjustable air diffuser vane assembly integral with process air blower. Vanes shall be multileaf and pivoted. Variable discharge diffuser blades shall be mounted in a cast iron housing. Sleeve bearings shall be of the permanently lubricated type and the linkage shall be readily accessible for lubrication. Vanes shall be mechanically stopped for a maximum closed setting of 75 degrees (15 degree open). Adjustable diffuser assembly shall be installed complete with a motorized actuator to operate from a 4 to 20 mADC modulating signal. Mount an adjustable limit switch on each adjustable diffuser actuator to energize a light on the blower control panel when the vanes are at the maximum closing setting.
      b. Provide an indicating manual/auto station with remote setpoint capability at the blower control panel. Provide an emergency manual operator for the vanes. The motor actuator shall operate on 480 volt, 3 phase, 60 Hz. Actuator shall be provided with a unit mounted disconnect switch.
   2. Inlet Air Guide Vane Assembly:
      a. Mount inlet guide vane assembly integral with each air blower. Vanes shall be multileaf and pivoted to produce optimum pre-rotation of the incoming air stream. Bearings shall be of the permanently lubricated type and the linkage shall be readily accessible for lubrication. Vanes shall be mechanically stopped for a maximum closed setting of 75 degrees (15 degrees open). Guide vane assembly shall be installed complete with a motorized actuator to operate from a 4 to 20 mADC modulating signal. Mount an adjustable limit switch on each guide vane actuator to energize a light on the blower control panel when the vanes are at the maximum close setting. Provide a 4 to 20 mADC signal for remote indication of guide vane position. Provide an emergency manual operator for the vanes. Motor actuator shall operate on 480 volt, 3 phase, 60 Hz. Actuator shall be equipped with unit mounted disconnect switch.

J. Product and Manufacturer: Provide one of the following:
   1. Lone Star Blower
   2. Turblex
   3. Roots Division of Dresser Industries
   4. Atlas Copco

2.3 DETAILS OF CONSTRUCTION - BLOWER DRIVER

A. Electric Motor Driver:
   1. Motors shall conform to the requirements of Section 11000, Electric Motors.
   2. Motor rating and characteristics and all materials and construction shall be in accordance with the latest standards of ANSI, IEEE and NEMA as applicable.
   3. Motor shall be a open drip proof motor with Class H insulation, high efficiency type design, with a maximum speed of 3600 rpm.
   4. Motor shall be suitable for operation on 480 volt, 3 phase, 60 Hz power.
   5. Motor shall have sufficient torque and thermal capacity to successfully start and accelerate the coupled blower from the plant power system without subjecting the motor to excessive heating. The stator windings and end turn connections shall be fully brazed to withstand full voltage starting regardless of whether reduced voltage startup is utilized. The motor shall be not less than the horsepower required in the Schedule of Service Conditions. Motor shall have a 1.15 service factor.
   6. Locked rotor current shall be as specified in NEMA standards.
   7. Motor enclosure shall be for top air inlet and discharge. Apply acoustical treatment as required to comply with noise limitations specified herein.
   8. Motor frames and end shields shall be heavy fabricated steel or cast iron of such design and proportions as to hold all motor components rigidly in proper position and provide adequate protection for the type of enclosure employed.
   9. Provide space heaters, 120 volt, single phase.
   10. Shaft shall be made of high-grade machine steel or steel forging of size and design adequate to withstand the load stresses normally encountered in motors of the particular rating.
   11. Stator cores shall be made of low loss, non-aging electrical sheet steel with insulated laminations. Stator coils shall be form wound and of identical size, shape, insulation and number of turns.
   12. Stators shall be form wound and insulated with glass and mica applied directly to the coils. Motors shall have a Class H non-hygroscopic epoxy vacuum/pressure impregnated insulation system, limited to the temperature rise specified herein. All connections shall be brazed, with no crimp connections used except for terminals. A coil bracing for stator end turns shall be utilized to eliminate coil movement and vibration during starting and running conditions. Stator design and construction shall be such as to secure mechanical rigidity to withstand repeated full voltage starts and eliminate overheating.
   13. Rotors shall be made from high-grade steel laminations adequately fastened together, and to the shaft. Rotor squirrel cage windings may be cast or extruded copper alloy bar-type construction with brazed end rings.
   14. Bearings shall be anti-friction type, oil lubricated. Bearings shall be designed to prevent leakage of oil and entrance of dust, shall contain a large oil sump with settling chamber, and shall be equipped with a guarded sight gauge, plugged drain cock, and filler connection. Bearings shall have a minimum B-10 life of 100,000 hours.

15. Motors shall have a chemical resistant, corrosion and fungus protective coating on all interior surfaces. Exterior prime coating shall be compatible with the field applied finish coating.
16. Enclosures shall have stainless steel screen and shall be protected against corrosion, fungus and insects.
17. All fittings, bolts, nuts and screws shall be plated to resist corrosion. Bolts and nuts shall have hex heads.
18. Motor shall have a stainless-steel manufacturer's nameplate which shall provide the following: type, frame, insulation, class, HP, full load current, RPM, centigrade degree rise, manufacturer's name and serial number model, voltage, locked rotor KVA code, bearing numbers and a connection diagram.
19. Main terminal box shall be NEMA 1 and provide ample room for stress cones. Manufacturer shall furnish lightning arrestors and surge arrestors mounted in the terminal box.
20. Main terminal box shall have provisions for mounting differential protection current transformers and for proper termination of shielded cables. Sufficient space shall be provided for 5 KV shielded, EPR insulated, PVC jacketed cable terminations. Leads from each phase winding shall be securely clamped near the point where they exit the stator frame and shall be clearly identified.
    a. Furnish and install within the motor terminal box or near (5 feet-0 inches maximum) in separate enclosures, a bank of capacitors to raise the power factor of the assembly to unity at rated load, if possible, without jeopardizing the integrity of the machine due to transient over voltages produced by switching off a running motor.
21. Motors shall have the following minimum efficiencies:
    a. Minimum full load efficiency of 94 percent when operating at rated voltage and frequency.
22. Motors shall be free of objectionable noise and vibration. Motor sound pressure level shall not exceed 90 dbA at five feet under free field, no load conditions in accordance with IEEE Standard 85. Vibration level measured on the bearing housing shall be in accordance with values shown in NEMA Standards.
23. Motors shall be rated for continuous operation in an ambient temperature not exceeding 50°C. The temperature rise as measured by the resistance method shall not be more than 80°C, or 85°C by embedded detector at design horsepower nor more than 90°C by embedded detector at 1.15 service factor.
24. Six platinum resistance temperature detectors (RTDs) as specified in Section 17052, Process Control System Primary Sensors and Field Instruments, shall be distributed about the stator, each being embedded between upper and lower coil in the coil slot. Leads shall be brought out to a separate terminal box through a flexible sleeve which will protect the leads and assure their flexibility after dipping and baking of stator.
25. One dual type resistance temperature detector of the same rating and material as defined above shall be provided for each motor bearing and wired to a separate terminal box.
26. Motors shall be of the open self-ventilating type, taking cooling air from and discharging to the blower room. Cooling air discharge shall be upward from the motor enclosure. Suitable fan blades shall be installed at both ends of

rotor to force air axially along the rotor with minimum windage noise. Ventilation openings shall be provided with suitable grilles or baffles, and screens.

27. Product and Manufacturer: Provide one of the following:
    a. General Electric Company.
    b. Siemans Allis.
    c. Reliance Electric.
    d. Or equal.

2.4 BLOWER-DRIVER COUPLINGS

A. Flexible couplings, selected on the basis of a system torsional analysis, shall be of the gear or flexible disk type designed to permit axial, horizontal and vertical adjustments, and shall provide for changes of angular and parallel misalignment between the blower and motor.

B. Couplings shall be designed to hold the end play of the motor rotor within acceptable limits and shall be designed with a service factor of 1.50.

C. Provide an OSHA approved stainless steel coupling guard of minimum 14 gauge and install over the coupling.

2.5 MOUNTING AND VIBRATION LIMITATION

A. Each blower and electric motor, coupled together, shall be factory mounted on a common steel base, properly braced to form a rigid support for the entire assembly. The units shall be factory aligned on the base prior to shipment. The common base shall be designed and constructed such that it will fit upon a concrete support pad while properly supporting the blower and motor thereon. Suitable anti-vibration pads, bolts, or pins shall be sized and furnished by the manufacturer for use when mounting the common base on the concrete support pad.

B. Blower, motor, base, and shafting shall be designed and installed to limit field vibration to the "satisfactory" maximums recommended by the International Organization of Standardization ISO 3945 (latest revision), "Mechanical Vibration of Large Rotating Machines with Speeds of from 20 to 200 rps - Measurement and Evaluation of Vibration Severity in Situ." In no case shall the field vibration velocity measured at any bearing exceed 0.18-inches per second (rms) for motor driven blowers. These limits shall be met when operating at any point within the specified range of operation at any operating speed.

2.6 ACCESSORIES

A. Flexible Connectors:
    1. Provide suitable reinforced flexible connectors for both inlet and outlet piping rated for minimum 25 psi pressure and 300°F air temperature. Flanges shall

be ANSI 125 pound. Harness each joint with four tie rods connected to plates fastened to flanges to allow maximum elongation of the joint.

B. Silencers:
   1. Inlet Silencer:
      a. The inlet silencer shall be an industrial grade, splitter type duct muffler.
      b. The muffler shall have a minimum pressure drop of 0.10-inches of water column at 500 cfs airflow.
      c. The muffler shall, at a minimum, provide the following insertion loss when tested in accordance with ASTM E 477.

	1/3 Octave Band Center Frequency (Hz)					
	125	250	500	1000	2000	4000
Minimum Insertion Loss (Db)	7	15	24	31	34	26

      d. Construct perforated metal internal and solid casing using a minimum of 14 ga. Type 316L stainless steel.
      e. Product and Manufacturer: Provide one of the following:
         1) The Aeroacoustic Corporation.
         2) Industrial Acoustics Company.
         3) Or equal.
   2. Blowoff Silencer:
      a. The blowoff silencer shall include a diffuser section and a splitter muffler section.
      b. The muffler shall be capable of reducing blowoff sound to below 80 dBA five feet from the muffler discharge.
      c. The muffler shall be capable of continuous operation to relieve the maximum blower capacity to atmosphere under all operating conditions.
      d. Construct perforated metal internals and solid casing using a minimum of 14 ga. Type 16L stainless steel.
      e. Product and Manufacturer: Provide one of the following:
         1) Aeroacoustic Corp.
         2) Or equal.
   3. Discharge Silencer:
      a. The discharge silencer shall be an annular type dissipative muffler.
      b. The muffler shall have a maximum pressure drop of 0.80-inches of water column at the design condition.
      c. The muffler shall, at a minimum, provide the following insertion loss:

	Octave Band Center Frequency (Hz)					
	125	250	500	1000	2000	4000
Minimum Insertion Loss (Db)	8	15	25	30	35	30

      d. Materials of Construction:
         1) Construct muffler using perforated metal internals and solid casing having a minimum of 14 ga. Type 316 stainless steel. Case shall be constructed to withstand internal pressure of 14 psig.
      e. Product and Manufacturer: Provide one of the following:

1) Universal Silencer, Division of Nelson Industries, Model SUS.
2) Or equal.

C. Bypass Valve:
1. Provide one motor operated butterfly valve with each blower to bypass the discharge flow. Butterfly valve shall be installed complete with an actuator to operate from full open to full closed position over a minimum time period of 20 seconds. Operator shall be equipped with two adjustable limit switches to energize lights on the blower control panel when the valve is full open or full closed. Motor shall operate on 480 volts, 3 phase, 60 Hz. Operator shall be sized for operation at the rated pressure of the valve. The unit shall include motor complete with prewired starter, operator unit, gearing, torque switches, bored and key-wayed drive sleeve, declutch lever, auxiliary handwheel as a self contained unit and limit switches as specified herein. Motor shall have a service factor of 1.15. Power gearing shall consist of generated helical gears of heat treated steel and worm gearing. Worm shall be of hardened alloy steel. Power gearing shall be grease lubricated. Ball or roller bearings shall be used throughout. Provide open and close pushbuttons and a manual/auto selector switch at the blower control panel.

D. Protective Devices:
1. Provide a thermocouple sensing probe in the blower discharge piping from each blower. High temperature shall indicate impending high temperature level and shall actuate an alarm and high-high temperature shall shut down the blower and actuate an alarm.
2. Furnish a pressure switch for installation in the blower discharge piping from each blower. Pressure switch shall be adjustable from 0 to 10 psig. Upon a high discharge pressure condition, blowers shall shut down and actuate an alarm.
3. Furnish two-radial-plane vibration sensors 90 degrees apart at each radial pinion bearing and one axial sensor for the pinion shaft for each blower. Furnish an accelerometer on the motor housing of each blower. High vibration at any sensor shall actuate an alarm and high-high vibration shall shut down the blower. The required field instruments for monitoring and alarm functions shall be supplied by the manufacturer in accordance with the requirements of the Section 17266, Process Control System Instruments and Devices. Reference Article 2.9 of this Section for vibration system specification.

E. Discharge Cone:
1. Each blower outlet shall be supplied with a discharge cone to increase the blower outlet size to the large diameter air discharge piping. The length of the discharge cone shall be aerodynamically designed to minimize pressure drop and discharge turbulence; maximum sidewall angle increase shall be five degrees per side (ten degrees, total). The discharge cone shall have a discharge flange and bypass flange size as shown on the Drawings. Instrument connections shall be provided, as required. The discharge cone shall be constructed of Type 316 stainless steel.

2.7 BLOWER TERMINATION BOXES

A. Provide a blower 480 VAC power termination box, one for each blower suitable for mounting on the blower skid. Terminal blocks shall be provided to centrally terminate all skid mounted devices requiring 480 volt supply. Box shall be NEMA 12.

B. Provide a blower control termination box, one for each blower suitable for mounting on the blower skid. Terminal block shall be provided to centrally terminate all blower system skid devices. Six-inches of separation shall be provided between analog and 120 VAC wiring. Box shall be NEMA 12 and of sufficient size for all required signals plus 20 percent spare terminals.

C. Conduit and Wire:
   1. Provide all conduit and wire for blower skid devices to the blower termination boxes.

2.8 BLOWER CONTROLS

A. Process and Instrumentation Diagrams:
   1. Process and Instrumentation Diagrams are included in the Contract Documents for purposes of guidance and to show functional features only. The diagrams do not necessarily contain or show all components required to accomplish the desired results or all components required to interface equipment. All necessary parts, equipment, wiring and devices necessary to meet the functional and interfacing requirements shall be provided.

B. Instrumentation:
   1. The instruments furnished with each unit shall conform to the requirements of Section 17260, Process Control System Control Panel Construction. All gauges and switches shall have stainless steel internals. All switches shall be made intrinsically safe by use of intrinsically safe relays as specified herein unless specified otherwise. All pressure gauges and pressure switches shall be provided with gauge cocks of Type 316 stainless steel. All pressure switches shall be provided with 0 to 10 seconds, operator adjustable, time delays.
   2. Each unit shall be provided with the following instruments:
      a. Blower:
         1) Suction gauge with diaphragm seal.
         2) Discharge pressure gauge with diaphragm seal.
         3) Discharge temperature gauge.
         4) Discharge temperature switch. Set point at 350°F to activate on rising temperature.
   3. Vibration and Temperature Monitoring Systems:
      a. General: Two independent systems shall monitor vibration and temperature at the bearings and shall be housed in the blower panels. The monitoring systems shall be panel mountable instrument systems consisting of:
         1) Instrument enclosures and monitor assemblies.

2) Analog vibration monitor channel cards.
3) Analog temperature monitor channel cards.
4) Relay modules.
5) Power supplies.
6) Analog or analog type segmented bar graph displays.
7) Vibration and temperature sensors.
8) Adapter cable to interconnect the vibration monitor buffered signal output to a BNC instrument receptacle.
9) Channel identification and range provided by an engraved nameplate attached to the monitor front panel.
10) Required appurtenances for a completely functional system.

b. Instrument Enclosure:
1) Instrument enclosure shall contain the frame for the channel cards and the electrical interconnections for the system monitors, relay modules and power supply.
2) Barrier type terminal strips at the rear shall provide termination points for field wiring.
3) Instrument assembly enclosure shall be NEMA 12 or a NEMA 12 glass door must be provided to encase the monitor front panel.

c. Analog Vibration Monitor:
1) The analog vibration monitoring channels shall plug directly into the vibration monitor instrument frame. The monitor shall contain five complete channels of vibration monitoring at each compressor panel, each of which shall include trip and warning alarms, signal conditioning, transducer power supply and fault detection.
2) Required Features:
a) Front panel controls for alarm setpoint readout and vibration level.
b) Alarm circuitry to continuously monitor vibration and indicate levels in excess of preset limits.
c) One common warning alarm relay.
d) One common trip alarm relay.
e) One common fault alarm relay.
f) Monitor front panel shall provide the capability for connecting an analyzer for analysis of vibration signals. Front panel signals shall be buffered to prevent any loss of input signal if an output short should occur.
g) Buffered output must be fully compatible with a B&K Model 2515 vibration analyzer.
h) Monitor system linearity shall be 2 percent of full scale or 5 percent of reading.
i) Proximity vibration signals for inputs.

d. Analog Temperature Monitor:
1) Analog temperature monitoring channels shall plug directly into the temperature monitor frame. The monitor shall continuously monitor five complete channels of RTD inputs, each of which shall include trip and warning alarms, signal conditioning and fault detection.
2) Required Features:
a) Compatible with standard RTD’s.

b) Front panel controls for alarm setpoint readout and temperature level.
c) One common warning alarm relay.
d) One common trip alarm relay.
e) One common fault alarm relay.
f) LED indication of alarm conditions.
g) Input: three wire, 100 ohm platinum transducer.

e. Relay Modules:
1) Relay modules shall be contained within the instrument frames.
2) Required Features:
a) Contact Rating: three amp at 120 VAC.
b) Contact Material: Gold flashed.
c) Contact Arrangement: SPDT.
d) Construction: Hermetically sealed enclosure.

f. Power Supplies:
1) Power supply shall be contained within the instrument frames.
2) Required Features:
a) Power: 115 VAC ±10 percent, 60 Hz.
b) Temperature Rated: 0°C to 55°C.
c) Relative Humidity Limit: To 95 percent noncondensing.
d) System common reset.
e) Power up inhibit.
f) Alarm relay drive circuitry.
g) Provide regulated voltages for analog monitors.
Individual replaceable non-resettable line fuses sized to protect the captioned instrument shall be provided.

g. Analog Display:
1) Analog display shall be located on the front panel assembly of the instrument enclosure. Display shall have a scale for range in percent of full scale or Engineering Units.
2) Required Features:
a) Power "ON" indication.
b) High Read/Channel Select switch.
c) Channel displayed indication.
d) Alarm status indication.
e) Calibration by adjustable potentiometer.
f) Display resolution two percent of full scale.

h. Vibration Proximeter:
1) The proximeter system shall include a non-contacting eddy current type, gap-to-voltage transducer which is sensitive to distance, and dynamic change in distance, between the probe tip and the conductive material it is observing. Proximeters shall be mounted adjacent to each bearing to monitor radial vibration in the horizontal plane.
2) Required Features:
a) Oscillator/demodulator for transducer.
b) Generates RF signal which drives probe.
c) Demodulates returning signal.
d) Provides linear output to monitoring system.

e) Case of signal sensor shall be electrically isolated from circuit common.
f) System sensitivity and accuracy shall be sufficient to monitor and analyze vibration as an indication of machinery condition.

i. Product and Manufacturer: Provide one of the following:
1) IRD Mechanalysis 5806.
2) Or equal.

C. Control Panels:
1. Local Control Panel Design and Testing
A. A local control panel (LCP) shall be provided for operator control and monitoring of the blower package.
B. The LCP shall be a complete, functioning blower control system with communications interfaces, operator display, and power supply.
1. Operator Interface Panel (O/I) – Hardware
a. O/Is shall have the following features:
1) Enclosure rated NEMA 4/NEMA 12
2) Ambient temperature rating of 0 to 40 Degrees C
3) Shock rating of 100 G's
4) Field-replaceable flat panel backlight.
b. O/Is shall have the following integrated touchscreen display characteristics:
1) 8.4-inch color TFT flat panel-SVGA
c. Non-integrated (blind node) units shall support the following screen resolutions:
1) VGA (640 x 480), SVGA (800 x 600), XGA (1024 x 768), SXGA (1280 x 1024) and UXGA (1600 x 1200) at full 32-bit color (16-bit on UXGA)
d. O/Is shall use touch screen as the operator's input device. O/Is must also support Microsoft compatible USB keyboard as well as pop-up entry windows for alphanumeric entry functions. Operator control actions through the touchscreen must support the following features:
1) Positive, two-step control for critical control operations and immediate one-touch control for non-critical operations such as page change or mode change.
2) Field-replaceable touch screen
3) Analog resistive touchscreen.
2. Operator Interface – Communications
a. O/Is shall offer the following communications choices:
1) Built-in PLC drivers for both serial and Ethernet communications protocols
2) Simultaneous communication to multiple PLCs and PLC brands
3) Network down/uploading of configurations, drivers and runtime firmware

4) Dual serial ports with one configurable for RS-232/422/485
5) Four V2.0 USB ports.
6) 10/100Base-T Ethernet communications
7) Built-in OPC Server connectivity

3. Operator Interface – Software and Configuration
   a. O/Is shall offer the following tools for creating and changing screen content:
      1) Advanced Windows-based configuration software
      2) Common look and feel across product line
      3) Single configuration software for all products
      4) Fill-in-the-blanks configuration
      5) Automatic conversion of existing configurations
      6) Context-sensitive help screens
      7) Pre-configured templates
         a) Indicator
         b) Button
         c) Readout
         d) Bar
         e) Meter
         f) Trend
         g) Clock
         h) Multiline Text
         i) LED Indicator
         j) Scales
         k) Slider controls
         l) Touch Areas
         m) Images – support for BMP, JPEG, WMF and EMF formats
         n) Images – support for Ethernet based Cognex and DVT vision system images.
         o) Standard graphics components including lines, rectangles, elipses, polylines, and polygons
      8) User definable custom templates which can be created and grouped from any other templates or graphic components.
      9) Document Viewer Window for display of PDF, JPEG, TXT, and HTML file types
      10) Windows Media Player support for MPG and MPEG file types
      11) Alarm and Event window
      12) Full library of Boolean logic and math operators
      13) Direct addressing of PLC data and OPC tags
      14) Ethernet transfers
      15) All documentation in HTML Help format
   b. O/Is shall provide the following graphical capabilities:
      1) Bitmap graphics (.bmp and jpg)

2) Object-based pixel graphics (wmf and .emf formats plus native graphic elements)
3) Dynamic graphics, both bitmap and object based.
4) Blinking colors for up to 16 different blink states and up to 3 different blink rates.
5) Nondestructive updates

4. Operator Interface shall be Eaton/Cutler-Hammer type PanelMate ePro PS or pre-approved equal.

C. The local control panel will be fed with one 480 VAC, 3 phase power connection. LCP shall contain distribution components, power supplies and transformers, as required, to derive power for all instruments and equipment provided as part of the blower package.
D. The LCP design, construction, and testing shall be completed in an ISO 9001 certified shop by the blower Manufacturer.
E. All information to be in USA English units of measure.
F. Control Panel Construction
1. The Manufacturer shall provide a complete and fully functional control system to manually or automatically operate the control system as specified herein. All Manufacturer's recommended safety devices shall be provided to protect operators. All control devices, unless specified otherwise, shall be mounted in the Control Panel.
2. The control panel shall consist of a main circuit breaker, circuit breakers for each VFD, motor circuit protectors (MCP) and magnetic starters for auxiliary motors, and a 120-volt control power transformer (fused on primary and secondary). All control components shall be mounted in one common enclosure. Control switches shall provide means to operate each motor manually or automatically.
3. The control panel can be provided as a separate, external panel to be mounted adjacent to the blower enclosure, or the control panel can be located inside the blower enclosure.
a. If an external control panel is provided, the panel enclosure shall be NEMA 12.
b. If the control panel is inside the blower enclosure, the panel enclosure shall be NEMA 1.
4. The enclosure shall be equipped with a door and shall incorporate a removable back panel on which control components shall be mounted. The door shall be provided with a pad-lockable vault type 3-point latch. Back panel shall be secured to enclosure with collar studs. Door(s) shall be interlocked with main circuit breaker and provided with pad-locking provisions for lock out tag out procedures.
5. All motor branch circuit breakers, motor starters and control relays shall be of highest industrial quality, securely fastened to the removable back panels with screws and lock washers. Back panels shall be tapped to accept all mounting screws. Self-tapping screws shall not be used to mount any component.

6. A thermal-magnetic air circuit breaker shall be provided for the main breaker. All circuit breakers shall be sealed by the Manufacturer after calibration to prevent tampering. Each circuit breaker shall be adequately sized to meet the equipment operating conditions. Motor Circuit Protectors (MCP) shall be molded case with adjustable magnetic trip only.
7. All operating control and instruments shall be securely mounted on the exterior door. All controls and instruments shall be clearly labeled to indicate function. All exterior mounted equipment shall have its NEMA rating match that of the enclosure NEMA rating except where specifically noted otherwise herein.
8. Mode selector switches shall be Hand-Off-Auto type to permit override of automatic control and manual actuation of shutdown. Switches shall be NEMA 4X (800H) providing three (3) switch positions, each of which shall be clearly labeled according to function. Provide contacts as necessary for control and status monitoring as specified herein and as shown on the P&IDs.
9. Indicator lamps shall be LED full voltage type and mounted in NEMA 4X (800H) modules. Lamp modules shall be equipped to operate at 120 volt input. Lamps shall be easily replaceable from the front of the control compartment door without removing lamp module from its mounted position. Indicators shall be provided for individual motor run and an indicator for each failure condition.
10. A six (6) digit, nonreset elapsed time meter shall be connected to each motor starter to indicate the total running time of each motor in "hours" and "tenth of hours". A transmitter shall also be provided to enable data logging of elapsed time.
11. An emergency stop pushbutton shall be provided. The pushbutton shall be red, large palm, push/pull type with maintained contacts. The emergency stop shall provide hardwired shutdown of the blower system and shall not permit restarting until the pushbutton is locally reset. Provide contacts as necessary for control and status monitoring as specified herein.
12. The control diagrams and overload tables shall be laminated to the inside of the door except where door space is limited, in which case the laminated documents shall be in the print storage pocket.
13. Print storage pockets shall be provided on the inside of each panel. Pocket shall be of sufficient size as required to hold all prints necessary to service the equipment. A set of reduced drawings shall be provided for each panel, fixed to fit in the storage pocket.
14. The control panel shall be provided with lightning and surge protection. The surge protection devices (SPD) shall be mounted within the control panel enclosure. Lead lengths shall not be longer than 12 inches from the main circuit breaker. The SPD shall have minimum surge current capacity rating of 80 kA per phase. The surge protection devices shall be listed in accordance with UL 1449 Second Edition and as defined by IEEE C62.41 and C62.45. The

transient voltage surge suppressors shall be for the power supply voltage:

a. TE/5XF - 480 VAC, 3-Phase

15. Provide wire tags on every conductor. Provide heat shrink sleeve markers. Tags using adhesives are unacceptable.
16. Wiring shall be in accordance with NEC requirements and per UL standards.
17. The control panel shall be provided with nameplates identifying each component, selector switches, pilot lights, etc. Nameplates shall be permanently affixed using an epoxy process (inner door nameplates shall be fastened with stainless steel screws). Nameplates shall be laminated plastic, engraved white letters with a black background.
18. All control panels shall be provided with a master nameplate located on the exterior door as indicated herein and as shown on both the P&IDs and Control System Architecture Diagram.
19. Where applicable provide a nameplate which reads as follows "CAUTION - THIS PANEL CONTAINS A VOLTAGE FROM AN EXTERNAL SOURCE." Letters shall be black on a high visibility yellow background.
20. All control relays shall be have 10 amp rated contacts (minimum), 11 pin with mounting base , 3PDT (minimum), with LED indicators to show relay status, relays shall be manufactured by Potter Brumfield or Approved Equal.
21. Terminal blocks shall be 600 volt heavy duty rated, tubular clamp type. Terminal strips shall be Allen Bradley catalog #1492-CA-1 or Approved Equal. Each terminal shall be individually labeled. Provide fused terminal with neon lamp blown fuse indicator for discrete commons (to provide power for groups of 8 discrete I/O), and fused terminal with LED blow fuse indicator for analog signals/loops.
22. The completed blower package with local control panel assembly shall be U.L. certified.
23. A copper ground bar with sufficient terminals for all field and panel ground connections shall be provided.
24. A copper isolated ground bar with sufficient terminals for all signal shield wires. Shield wires shall be connected to this ground bar at one point only.
25. All signal wiring entering and exiting the control panel shall be provided with surge protection.
26. All wiring within the control panel shall be color coded or coded using electrical tape in sizes where colored insulation is not available.

2. Control Functions

A. At a minimum, the blower control system shall be provided with the following control functions:

1. Local Hand/Off/Remote Switch: This switch shall be a physical mode selector switch.

2. High Pressure Shutdown
3. High Temperature Shutdown
4. Local/Remote Speed Control
5. Remote Start/Stop
6. Emergency Stop Pushbutton
7. Remote General Blower Fault Alarm

3. Master Control Panel Design and Testing

A. A master control panel (MCP) shall be provided for automatic control and monitoring of multiple blower systems. The MCP shall monitor the blower systems and maintain the required pressures or flows of the systems, independently and combined, by adjusting valves, the quantity of blowers in operation, and their speeds.

B. The MCP shall be a complete, functioning control system with a PLC, communications interfaces, operator display, and power supply:

1. See Local Control Panel Design and Testing section for panel construction and component information not found here:
   a. Panel shall be powered with a 120VAC circuit.
   b. Panel shall be NEMA 12 and floor or wall mountable.
   c. Provide an Allen Bradley ControlLogix PLC platform programmed with RSLogix5000
   d. Provide an ethernet switch with enough ports to connect the PLC, OIT, each blower in the system, a programming computer, SCADA, and a spare port
   e. Provide PLC programming to provide blower balancing control for blowers in multiple systems. Provide OWNER with a copy of the program that includes programming notes and identifications.
   f. Provide an Eaton Powerware uninterruptible power supply (UPS) in the MCP. The unit shall be sized to power the components in the MCP. Provide 30-minute battery.

C. Control Description:

1. Protective Devices:
   a. Provide a thermocouple sensing probe in the blower discharge piping from each blower. High temperature shall indicate impending high temperature level and shall actuate an alarm and high-high temperature shall shut down the blower and actuate an alarm.
   b. Furnish a pressure switch for installation in the blower discharge piping from each blower. Pressure switch shall be adjustable from 5 to 15 psig. Upon a high discharge pressure condition, blowers shall shut down and actuate an alarm.
   c. Furnish two-plane vibration sensors on the bearing housings for each blower. High vibration at any sensor shall actuate an alarm and high-high vibration shall shut down the blower. The required electronics for monitoring and alarm functions shall be supplied by the manufacturer. Reference Article 2.9 of this Section for vibration system specification.
2. Blower Operation-Electric Motor Driven Blowers:

a. Electric motor driven blowers shall be manually started from control panel.
b. Provide Hand/Off/Auto selector switches at the control panel for operation of the auxiliary lube oil and oil cooler fan motors.
c. Provide an auto/manual loading station for the inlet vane damper or adjustable diffuser on the local control panel to be used to adjust the flow capacity of the blower.
d. Provide open and close pushbuttons with feedback indicating lights and a auto/manual selector switch on the control panel to be used to operate the bypass butterfly valve on the blower.
e. Provide open and close pushbuttons with feedback indicating lights and auto/manual selector switch on the control panel to be used to operate a motorized butterfly valve at the discharge of the blower. The valve will be used as an isolation valve during startup.
f. Once started, the electric motor driven blowers in the auto mode will be simultaneously flow modulated by a programmable controller to meet demands.
g. When the blower motor trips (shutdown) due to a motor wiring short circuit, high-high motor winding or bearing temperature, motor overload, motor stall or out-of-synchronization condition, an indicating light will illuminate at the panel. After the trouble is corrected, a hardwired reset pushbutton at the panel must be depressed before the blower can be restarted. This logic shall be included at the motor starter.

3. Interlocks:
   a. General:
      1) The blower manufacturer shall provide relay logic and control wiring for blower operation and equipment protection. Relays and controls shall be hardwired in the control panel or engine junction box.
   b. Interlock Logic:
      1) Start Sequence:
         a) AUTO start or STOP sequence will require that AUTO/-MANUAL stations for the inlet vane damper, the motorized bypass valve and motorized isolation valve are in the AUTO mode.
         b) In addition to the safety interlocks for blower drives described below, position limit switches on the inlet vane damper, bypass valve and isolation valve are also interlocked into the AUTO start sequence of the blowers. Blower start will require that the inlet vane damper is in full closed position (actually mechanically stopped at 15 degrees open), the bypass valve is fully open and the isolation valve is fully closed. Once the blower has been given time to achieve full speed, the isolation valve shall open and the bypass valve shall close. The bypass valve shall be geared to fully OPEN/CLOSE over a nominal 20 second time period to avoid a rapid pressure surge.
         c) When limit switches detect that the bypass and isolation valves are closed and open, respectively, the inlet vane damper for the engine blowers shall be slowly ramped to the fully open position while the dampers for the motor driven blowers begin modulating on demand.

d) When the blower is stopped, the inlet vane dampers shall close, the bypass valve shall open and the isolation valve shall close.

c. Lube Oil System:
   1) In the AUTO mode, the auxiliary lube oil pump will be started when oil pressure is low and stopped when the pressure is high.
   2) In the MANUAL mode, the lube oil pump will run continuously.
   3) In the AUTO mode, the lube oil cooling fan will automatically start when the process air blower starts and will remain on for 20 minutes after the blower has stopped.
   4) In the MANUAL mode, the cooling fan will run continuously.

d. Blower Drive:
   1) The electric motor driven blowers will be started from a start command at the panel and stop on a stop command or on high-high vibration, high-high motor bearing temperature, high-high motor winding temperature, high-high discharge temperature, high discharge pressure, high-high blower bearing temperature, or low-low oil pressure.
   2) Blower motor trip interlocks (high-high motor winding or bearing temperature, wiring short circuit, motor overload or out-of-synchronization), panel lights and the reset button are wired directly to motor starter.
   3) Manufacturer shall provide instrumentation and control logic, if required, for blower antisurge protection and shall present this information for review at the Project Coordination Meeting.

2.9 ACOUSTICAL ENCLOSURE

A. General:
   1. Provide a double wall, insulated, acoustical enclosure for each blower-motor unit. The enclosure shall be complete with frame, walls, roof, observation windows, and vent panels.
   2. All panels and components shall be prefabricated and shall not be susceptible to damage from extended exposure to airflow, pressure differentials, vibration, air temperature, or humidity.
   3. The entire enclosure shall be designed by the manufacturer to be self supporting when any or all of the side panels are removed. The enclosure shall be independent of the blower skid.

B. Construction:
   1. Panels shall be of lift-out construction, arranged to permit access to all parts of the blower assembly for service and maintenance.

C. Panel Construction:
   1. All panels shall be not less than 3-inches thick with a solid aluminum exterior shell, and a perforated aluminum interior shell.
   2. The outer shell shall be constructed of aluminum with a minimum 18-gauge thickness.

3. The inner shell shall be constructed of perforated aluminum with a minimum 22-gauge thickness. Perforations shall be 3/32-inch diameter round holes with staggered spacing, 3/16-inches on center. The perforated material shall have a maximum of 23 percent open area.
4. Each panel assembly shall be completely filled with acoustical/thermal insulating material that is noncombustible inert, mildew-resistant, and vermin-proof. Insulation shall not settle within the panel assembly. No insulating materials shall be used that have a flame spread greater than 25 or a smoke developed greater than 50, as determined by ASTM Standard E 84 (UL-723, NFPA 255).
5. Acoustical Performance:
   a. The manufacturer shall provide certified testing data obtained from an acoustical laboratory, listing sound absorption and transmission loss characteristics of the panel assembly. Testing data may be for galvanized panels.
   b. The free field A-weighted sound pressure level shall be measured by a Type 1 instrument suited for checking compliance with Environmental & Occupational Noise Rating Recommendations. The meter used for testing shall comply with IEC 6S1 Type 1 and ANSI S1.4 Type S1A.
6. Thermal Performance:
   a. Insulating materials used in all prefabricated panel assemblies shall have the following maximum thermal conductivities and nominal thermal resistance (R) at a mean temperature of 75°F.

      Thermal Conductivity (BTU/HR-ft^2-°F)
      4-inch panel construction - .06 BTU/HR-ft^2-°F

D. Support Members and Trim:
   1. All perimeter and internal channel members and trim items shall be of aluminum, not less than 18 gauge.

E. Sealant:
   1. All external trim and base channel/floor interfaces shall be sealed with a calking sealant. Sufficient sealant shall be used to extrude surplus sealant and give a visual indication of complete coverage in all joints. The sealant shall have sufficient adhesive strength to prevent air leakage through the assembly when a pressure differential exists, but still allow system disassembly without damage to the panel components.

F. Windows:
   1. Provide 24-inch by 30-inch observation windows in a sufficient number of panels to visually observe all temperature and pressure gauges, lever arms of guide vanes and diffusers, lubrication pump system, and all instruments and controls within the enclosure. Windows shall be constructed of double pane, 1/4-inch thick safety glass held in place with neoprene acoustical seals and separated by an air space of the same thickness as the panel.

G. Ventilation System:
   1. Provide vent panels in the enclosure walls to admit air for cooling the enclosure while minimizing sound exiting the enclosure.
   2. The fan of the blower motor may provide primary air movement and cooling inside the enclosure. An auxiliary exhaust fan shall be mounted on the acoustical enclosure to provide air circulation after blower shutdown or when the temperature inside the enclosure exceeds 130°F. The fan shall be located in a suitably baffled air channel and shall be quiet running, so as to maintain integrity of the noise limitation specified below.

H. Openings for Pipe Penetrations:
   1. Openings for pipe and conduits shall be field cut to ensure proper positioning. Provide framing members, collars and fittings as required to ensure the openings are sealed against acoustical leakage.

I. Product and Manufacturer: Provide one of the following:
   1. Turblex, Inc.
   2. United McGill Corporation.
   3. Industrial Acoustics Company.
   4. Or equal.

2.10 ANCHOR BOLTS

A. Furnish anchor bolts and nuts of ample size and strength for the purpose intended, sized by the equipment manufacturer. Provide hooked anchor bolts for direct embedment during placement of concrete. Anchor bolt materials shall be of Type 316 stainless steel conforming to the requirements of Section 05051, Anchor Bolts, Toggle Bolts and Concrete Inserts. Refer to and comply with the requirements of Section 03300, Cast-In-Place Concrete and Section 03600, Grout.

2.11 TOOLS AND SPARE PARTS

A. Furnish and deliver the following boxed and labeled:
   1. For each blower:
      a. One complete set of bearings for blower and lube oil pump.
      b. Two sets of all gaskets and seals for blower and oil pumps.
      c. Two sets of oil pressure switches and oil filter cartridges.
      d. One spare main oil pump and one spare auxiliary oil pump for blower.
   2. For each electric motor driver:
      a. One complete set of bearings.
      b. One set of all gaskets and seals.
      c. One spare flexible coupling for electric drive and blower.
   3. Furnish two sets of any special tools required for normal operation and maintenance.

B. Spare parts shall be packed in sturdy containers with clear indelible identification markings and shall be stored in a dry, warm location until transferred to the

OWNER at the conclusion of the Project. Comply with the requirements of Section 01783, Spare Parts and Maintenance Materials.

2.12 SURFACE PREPARATION AND PAINTING

A. Blowers, motors, drives, frames, baseplates, appurtenances, etc., shall receive shop primer and shop finish coating conforming to the requirements of Section 09900, Painting. If any damage to the paint system occurs, the equipment shall be repainted as directed by the ENGINEER.

B. Surface preparation and painting shall conform to the requirements of Section 09900, Painting.

C. All gears, bearing surfaces, machined surfaces and other surfaces which are to remain unpainted shall receive a heavy application of grease or other rust-resistant coating. This coating shall be maintained during storage and until the equipment is placed into operation.

D. Certify in writing, that the shop primer and shop finish coating system conforms to the requirements of Section 09900, Painting.

2.13 LUBRICANTS

A. Furnish and install oil and grease required for initial operation. Products shall be as recommended by the manufacturer.

PART 3 - EXECUTION

3.1 INSPECTION

A. Inspect all equipment immediately upon delivery to site. All surfaces shall be smooth, free of voids and porosity, without dry spot, crazes or un-reinforced areas. If damaged, notify ENGINEER and manufacturer immediately.

B. Do not install damaged equipment until repairs are made in accordance with manufacturer's written instructions and approved by the ENGINEER. Only minor repair work shall be permitted in the field. All other damaged items shall be sent to factory for repair or replacement.

3.2 INSTALLATION

A. Equipment shall be installed in accordance with manufacturer's instruction and recommendations and the approved Shop Drawings. The installation shall be certified on Form 01620-A specified in Section 01331, Reference Forms.

B. All blowers shall be installed on concrete bases, secured with anchor bolts, and grouted with non-shrink grout conforming to Section 03300, Cast-In-Place Concrete, Section 03600, Grout, and Section 05051, Anchor Bolts, Toggle Bolts and Concrete Inserts.

3.3 FIELD PAINTING

A. Field painting shall conform to the requirements of Section 09900, Painting.

3.4 START-UP AND TEST

A. Purpose: Perform operating tests to demonstrate that the equipment operates without excessive vibration and without exceeding the specified noise limits. Refer to and comply with the requirements of Section 01752, Equipment and System Startup and Performance Testing.

B. Make adjustments required to place equipment in proper operating condition. Field test the equipment to assure that the system operates in accordance with these Specifications and to the satisfaction of the ENGINEER.

C. A manufacturer's factory-trained representative shall check and approve the installation before operation. The representative shall operate and test system in the presence of ENGINEER and verify that the equipment conforms to requirements. The representative shall revisit the site as often as necessary until all deficiencies are corrected.

D. Perform testing, checkout and start-up of the equipment under the technical direction of the manufacturer's factory-trained representative. Testing and checkout shall include the services of a qualified factory trained representative of the control system manufacturer to program the control system. The representative shall be capable and authorized to make additions and/or deletions to the control system logic to meet the requirements for a successful start-up. Do not energize drive system without authorization from manufacturer's representative.

E. Sound Tests:
   1. Perform an overall sound-pressure level test on one blower of each size. Test results shall be rated in decibels in accordance with ANSI Standard S5.1.
   2. Take the overall sound pressure level at points evenly spaced around the blower and motor assembly and at five feet from the nearest part of the units without the panels installed in the acoustical enclosure. Sound level shall not exceed 90 decibels at five foot distance measured on the A-weighted scale without an acoustical enclosure.
   3. It is the intent of this Section that the complete unit as finally installed shall not exceed the sound pressure level as specified herein. Manufacturer shall submit a statement as to the unit's conformance with this Section, whether remedial measures will be required, and if so, what remedial measures he proposes.

4. Provide all instruments, necessary labor, tools, and materials to conduct the field tests.

F. Submit report of test results to ENGINEER.

3.5 MANUFACTURER'S SERVICES

A. A factory trained representative shall be provided for installation supervision, start-up and test services and operation and maintenance personnel training services. The representative shall make a minimum of 2 visits, minimum 6 hours on-site for each visit, to the site. The first visit shall be for assistance in the installation of equipment. The second visit shall be for checking the completed installation and start-up of the system. The third visit shall be as described under Section 01821, Instruction of Operations and Maintenance Personnel. Manufacturer's representative shall test operate the system in the presence of the ENGINEER and verify that the blowers conform to requirements. Manufacturer's representative shall revisit the job site as often as necessary until all trouble is corrected and the installation is entirely satisfactory.

B. All costs, including travel, lodging, meals and incidentals, shall be considered as included in CONTRACTOR'S bid price.

+ + END OF SECTION + +

SECTION 11630

JET AERATION EQUIPMENT

PART 1 - GENERAL

1.1 DESCRIPTION

A. Jet aeration system equipment manufacturer shall furnish materials, equipment, appurtenances, and incidentals as shown, specified and required to provide, test, and place into satisfactory operation the jet aeration equipment. Equipment installation will be by others.

B. The jet type aeration system shall be designed to provide required aeration and mixing of continuously-fed, continuously aerated concrete tank membrane bioreactors.

C. The equipment shall consist of the following: bi-directional jet aeration headers, submersible centrifugal pumps, in-basin liquid and air piping along with necessary supports and hardware, where required, as described hereinafter. Jet aeration system will connect into a process air supply system connections provided by others and located at the bioreactors.

D. All equipment specified under this section shall be furnished by a single system manufacturer who shall be responsible for the completeness, performance, adequacy and proper operation of the system in accordance with the requirements herein and as directed by the Design Builder.

E. Jet Aeration Header Recirculation Submersible Pumps, see Specification 11300, Submersible Sewage Pumps.

1.2 SUBMITTALS REQUIRED

A. Submit the following project data for each pump group specified herein:
   1. Type designation and descriptive literature.
   2. Detailed layout of aeration equipment and accessories. Details and dimensions of jet aeration assemblies, including manifold and distribution piping supports and joints.
   3. Recirculation Pump HP requirements.
   4. Jet Aeration head loss data for coordination with Process Air Blower system sizing confirmation.
   5. Oxygen transfer efficiency curve(s) of the proposed system for a representative layout section at different air flux rates in the design range.
   6. Seller's certified calculations and data showing location of critical speeds in relation to jet aeration pump operating speeds.
   7. Submit SOR, AOR and SOTE by zone design criteria by zone.

1.3 WARRANTY

A. Jet aeration equipment manufacturer shall guarantee all materials and system components for a period of 1 year following OWNER final acceptance of the equipment.

All costs for replacement of all failed or defective parts, including cost for shipping to the job site, shall be borne by the jet aeration equipment manufacturer.

1.4 QUALITY ASSURANCE

A. All the equipment specified under this section shall be furnished by a single manufacturer with a minimum of 10 years' experience. Manufacturer shall be fully experienced, reputable and qualified in the manufacture of the equipment to be furnished. If requested, the manufacturer shall submit evidence of having supplied at least five successful installations with equal capacity or larger in the United States within the past 10 years.

B. In the event that it is impossible to conform with certain details of these specifications due to different manufacturing techniques, describe completely all non-conforming aspects.

C. All materials and equipment which will become a part of the installed work shall be new and unused.

D. To assure unity of responsibility, the pumps, motors, and supporting bases shall be furnished by or approved by the jet aeration equipment manufacturer. The jet aeration equipment manufacturer shall assume responsibility for the satisfactory operation of the entire pumping system including submersible pumps and motors.

PART 2 - PRODUCTS

2.1 SYSTEM PERFORMANCE/LAYOUT AND DESIGN CRITERIA

A. General: The proposed jet aeration system shall be designed to provide the following calculated maximum AORs to accommodate an average day maximum month (ADMM) design load condition with 5.75 mgd design flow each for Plants IV and Plant V. Actual air requirements may be distributed through both plants. The jet aeration equipment manufacturer shall be responsible for determining jet aeration header diameter and appropriate nozzle geometry.

B. Design Criteria:

Oxidation Ditch Materials of Construction	Reinforced Concrete
Overall Oxidation Ditch Dimensions	315 ft long by 72 ft wide
Number of Oxidation Ditches	Plant IV – 2 ea Plant V – 2 ea
Maximum Liquid Level in Oxidation Ditch	11.5 feet
Oxidation Ditch Design Water Temperature	25 degrees Celsius
Oxidation Ditch Volume Capacity	1.95 million gallons (MG)
Alpha factor	0.75
Beta factor	0.98

Fouling Factor, F	0.95
Preferred Number of Jet Aeration Headers per Oxidation Ditch	5 Each
Aerator type	Bi-directional
Number of Nozzles per Aerator	To be provided by Jet Aeration Equipment Manufacturer
Open Nozzles solids handling capacity	2.0-inch round solids
Slot Nozzle solids handling capacity	5/8 inch round solids
Jet Aeration construction	316 / 304 Stainless Steel
Pumps per Oxidation Ditch	5 each
Pump type	Submersible Centrifugal Pumps
Pump Flow	7,400 to 9,600 gpm
Maximum Pump RPM	Jet Aeration Equipment Manufacturer to Confirm
Minimum Pump efficiency required	50%
Liquid discharge header size at bioreactor inlet	Jet Aeration Equipment Manufacturer to Confirm
Air discharge header size at bioreactor inlet	Jet Aeration Equipment Manufacturer to Confirm
Maximum Motor HP per pump	75 HP

C. AOR Design Criteria

	Volume, MG	Peak Field Oxygen Uptake Rate (mg / L / hr)	Dissolved Oxygen (Concentration mg/L)
Zone 1	0.16	N/A	N/A
Zone 2	0.65	57.8	2.0
Zone 3	0.32	37.1	2.0
Zone 4	0.65	29.9	2.0
Zone 5	0.16	28.6	2.0

2.2 MANUFACTURERS

A. The equipment specified herein is based upon equipment provided by the following acceptable manufacturers:
   1. Evoqua Water Technologies, Waukesha, WI – Vari-Cant Jet Aeration System
   2. Veolia Water Technologies, Inc., NC – Krueger Jet Aeration System
   3. Or approved equal

2.3 BIDIRECTIONAL MIX JET AERATORS

A. Each Bidirectional Mix Jet Aerator header shall be comprised of integrally fabricated air and liquid headers equipped with multiple air/liquid jet nozzles. The jet nozzles shall be mounted on both sides of the liquid header, directed one way for half the run, equally spaced along the length of the manifold.

B. Recirculated liquid shall enter the liquid header through a flanged connection and low-pressure air shall enter the air header through another flanged connection.

C. The aerator shall be designed to provide uniform distribution of the liquid phase and air phase to each jet nozzle. The recirculated liquid and low-pressure air shall be combined in the jet nozzle and the resultant fine bubble stream shall be discharged horizontally as a high energy jet in the lower regions of the basin.

D. The liquid header shall be a cylindrical member which shall be internally smooth and must be free from protrusions which might collect stringy material. The jet nozzles shall be aligned on a common horizontal plane. The air header shall also be a cylindrical member located above and parallel to the liquid header.

E. The air header shall be attached to and supported above the liquid header by the air feed at each jet nozzle location. Individual feeds shall ensure uniform air distribution to each jet. Additional air header supports shall be provided as necessary.

F. The liquid and air headers shall be fabricated of corrosion resistant, structurally sound, filament wound, fiberglass reinforced thermosetting resin pipe conforming to ANSI/ASTM specification D-2996-81. The air feed for each jet nozzle shall be fabricated from structurally sound fiberglass reinforced plastic and shall be molded to the air and liquid headers in accordance with NBS specifications PS-15-69.

G. Each conical jet nozzle or slot injector nozzle shall consist of an inner liquid nozzle and outer air/liquid discharge nozzle fabricated from fiberglass reinforced plastic in accordance with NBS specifications PS-15-69. The jet nozzles shall be constructed using Hetron 922. No other type of material or resin shall be allowed.

H. The wall thickness of liquid and air headers shall be as follows:

DIAMETER	***WALL THICKNESS, INCHES (100 PSI)***
8-inch I.D.	0.21
12-inch I.D.	0.26
16-inch I.D.	0.31
20-inch I.D.	0.36
Nozzles	0.38
Air saddles	0.26

I. The jets shall be molded and assembled to be concentric with the inner liquid and outer air/liquid discharge nozzle in axial alignment. The air/liquid discharge nozzles shall be of constantly decreasing cross-sectional area so as to increase the velocity of the air/liquid mixture originating from the liquid nozzle and the air chamber.

J. The jet nozzles shall have minimum 3/8-inch wall thickness with a 10 to 20-mil silicon carbide barrier on the interior of the nozzles for abrasion resistance.

K. The outlets of both the inner and outer nozzles for conical nozzles shall be circular and shall be capable of passing a 2.2-inch spherical solid and must be free from all protrusions which may collectstringy material. Slot injector nozzles are also acceptable and shall be capable of passing 5/8 inch spherical solids and must be free from all protrusions which may collect stringy material.

L. The air/liquid secondary discharge nozzle shall have a circular orifice outlet having a diameter of from 1.7 to 1.9 times the liquid nozzle outlet diameter. The diameter of the secondary nozzle shall increase in the direction of the inner liquid nozzle with an included angle which shall be greater than 10 degrees and less than 30 degrees for at least 6- inches along the horizontal flow path of the secondary nozzle.

2.4 DISTRIBUTION PIPING

A. All air and liquid distribution piping within the basin shall be provided as part of the jet aeration equipment.

B. All pipe and fittings shall be constructed of structurally sound fiberglass reinforced plasticconforming to ANSI/ASTM specifications D-2996-81.

C. All piping shall be constructed to withstand a working pressure of 100 PSI.

D. Flanged connections shall be provided for connecting the jet system to the out-of-basin aeration piping (by others).

E. Gaskets and Type 18-8 stainless steel connection hardware shall be supplied for all connections including Seller/contractor interface inside the tank wall.

F. Piping shall be assembled in the field by the installation contractor. Installation hardware and FRP field wraps are to be supplied by the installation contractor.

2.5 SUPPORTS

A. All necessary supports for the jet aeration manifold, in-basin air and liquid piping shall beprovided by Seller.

B. All pipe supports shall be constructed of Type 304 stainless steel.

C. All pipe supports shall consist of a contoured saddle welded to a supporting base. The support base shall be anchored to the tank floor with anchor bolts and grouted in place asnecessary. No other type of supports shall be accepted.

D. A contoured clamp shall hold the piping to the saddle using bolted connections. The saddle and clamp shall be provided with Neoprene rubber pads to prevent abrasion. Type 18-8 stainless steel connection hardware of sufficient size shall be provided.

E. Anchor bolts and grouting shall be supplied by installation contractor.

F. All in-tank piping, supports, accessories and hardware shall be designed to support with no movement the following loads:
   1. Gravity Loads: All downward vertical loads including the weight of the pipe and appurtenant attachments together with the weight of water required to fill the pipe. Gravity loads shall be based on the tank being empty and the pipe being full.
   2. Buoyant Loads: The load which acts vertically upward, and which is equal in magnitude to the weight of the water displaced by the pipe. The line of action of this force shall be considered to pass through the centroid of the submerged cross-sectional area of the pipe. Buoyant loads shall be based on the tank being full and thepipe being empty.
   3. Seismic Loads – Per Local Requirements and Building Codes.

2.6 JET AERATION HEADER RECIRCULATION PUMPS

A. Submersible centrifugal pumps shall be supplied by the jet aeration system manufacturer for installation at a bioreactor to provide hydraulic water circulation flows through the jet aeration headers. No other type of pumps shall be acceptable. Pump and components shall be suitable for exposure to the mixed liquor in the bioreactors.

B. Mixing pumps shall be designed to pump a minimum of flow at the required TDH as specified by the jet aeration equipment manufacturer. Final TDH calculations shall be completed by the manufacturer based on the conceptual piping arrangements provided by the jet aeration equipment manufacturer.

C. See Section 11300, Submersible Sewage Pumps.

2.7 PROCESS AIR BLOWERS

A. Blowers are provided by others in this project.

2.8 ACCESSORIES

A. Modulating Butterfly Valves, Type 2, see Section 15101, Butterfly Valves

B. Air Flow Control Valves, Type 6, See Section 15106, Valve Actuators

PART 3 - EXECUTION

3.1 INSTALLATION, FIELD SERVICE AND STARTUP

A. Jet aeration equipment provided by the jet aeration equipment manufacturer shall be installed by others.

B. Jet Aeration System installation inspection, start-up service and operator instruction shallbe provided by a qualified jet aeration equipment manufacturer factory engineer in one trip. The trip shall be of two man-days at the jobsite.

C. Operator training and start up service shall also be provided at time of system start up.

++ END OF SECTION ++

THIS PAGE INTENTIONALLY LEFT BLANK

FCC No. 2034: Surprise SPA-1 Capacity Enhancements - Blower Procurement - GMP-1

Prepared by Felix Construction Company - 2530 South 52nd Ave, Phoenix, AZ 85043, United States of America

Bid Package Lead: Kory Burden (koryb@felixconstruction.com)

Project Location: 13659 Cactus Road, Surprise, AZ 85379, United States of America

11230: Aeration & Odor Control Blowers

Generated October 6, 2022

Base Bid

LINE ITEMS	Goble Sampson Associates, Inc. Submitted by John Deogracias **See Options Below** Original Proposal, October 4, 2022				Lone Star Blower Submitted by Amber Roberts **See Options Below** Original Proposal, October 5, 2022				Dykman Electrical Inc Submitted by Kory Burden **NO BID** Original Proposal, October 6, 2022				Atlas Copco Submitted by Kory Burden **NO BID** Original Proposal, October 6, 2022			
	Unit	Qty	Unit Cost	Total Cost	Unit	Qty	Unit Cost	Total Cost	Unit	Qty	Unit Cost	Total Cost	Unit	Qty	Unit Cost	Total Cost
SINGLE STAGE CENTRIFUGAL AIR BLOWERS PER SPEC 11371												**$0**				**$0**
ALTERNATIVE A, OPTION NO. 1 (350HP)																
Blowers equipped with an inlet air guide vane (IGV) assembly only with a Variable Frequency Drive (VFD)	each	4.00	$0.00	$0	each	4.00	$339,020.00	$1,356,080	each	4.00	$0.00	$0	each	4.00	$0.00	$0
ALTERNATIVE A, OPTION NO. 2 (350HP)																
Blowers equipped with both the IGV and discharge vane (DV) assemblies NO VFD's	each	4.00	$420,109.43	$1,680,438	each	4.00	$323,942.50	$1,295,770	each	4.00	$0.00	$0	each	4.00	$0.00	$0
ALTERNATIVE B, OPTION NO. 1 (300HP)																
Blowers equipped with an inlet air guide vane (IGV) assembly only with a Variable Frequency Drive (VFD)	each	5.00	$0.00	$0	each	5.00	$287,486.00	$1,437,430	each	5.00	$0.00	$0	each	5.00	$0.00	$0
ALTERNATIVE B, OPTION NO. 2 (300HP)																
Blowers equipped with both the IGV and discharge vane (DV) assemblies NO VFD's	each	5.00	$400,864.90	$2,004,325	each	5.00	$274,522.00	$1,372,610	each	5.00	$0.00	$0	each	5.00	$0.00	$0
INCLUSIONS																
Did you provide the performance data sheets for 350HP and 300HP with your bid?			YES				YES				N/A				N/A	
SCOPE-SPECIFIC INFORMATION																
What is the procurement schedule for your 350HP options? (submttals through delivery)	Submittal for approval will be in 10-12 weeks after acceptance of th				40-44 weeks											
What is the procurement schedule for your 300HP options? (submittals through delivery)	Submittal for approval will be in 10-12 weeks after acceptance of th				40-44 weeks											
SCOPE-SPECIFIC CLARIFICATIONS																
The successful bidder will be selected based on one (1) of the four (4) alternates/options above.																
GENERAL ACKNOWLEDGMENTS																
Have you reviewed ALL Bid Documents and Addendums available on Building Connected for this project?			YES				YES				N/A				N/A	

FCC No. 2034: Surprise SPA-1 Capacity Enhancements - Blower Procurement - GMP-1

Prepared by Felix Construction Company - 2530 South 52nd Ave, Phoenix, AZ 85043, United States of America

Bid Package Lead: Kory Burden (koryb@felixconstruction.com)

Project Location: 13659 Cactus Road, Surprise, AZ 85379, United States of America

11230: Aeration & Odor Control Blowers Generated October 6, 2022	Goble Sampson Associates, Inc. Submitted by John Deogracias	Lone Star Blower Submitted by Amber Roberts	Dykman Electrical Inc Submitted by Kory Burden	Atlas Copco Submitted by Kory Burden
Base Bid	**See Options Below**	**See Options Below**	**NO BID**	**NO BID**
Are Submittals, O&M Manuals, Start-Up Services and Training INCLUDED per the Bid Documents, if applicable?	YES	YES	N/A	N/A
Freight Included?	YES	YES	N/A	N/A
Applicable Taxes Excluded?	YES	YES	N/A	N/A
Summary		Please find enclosed our commercial and technical proposal offered in compliance with the blower procurements documents. Best Regards, Amber		

TURBLEX®
a Howden Brand

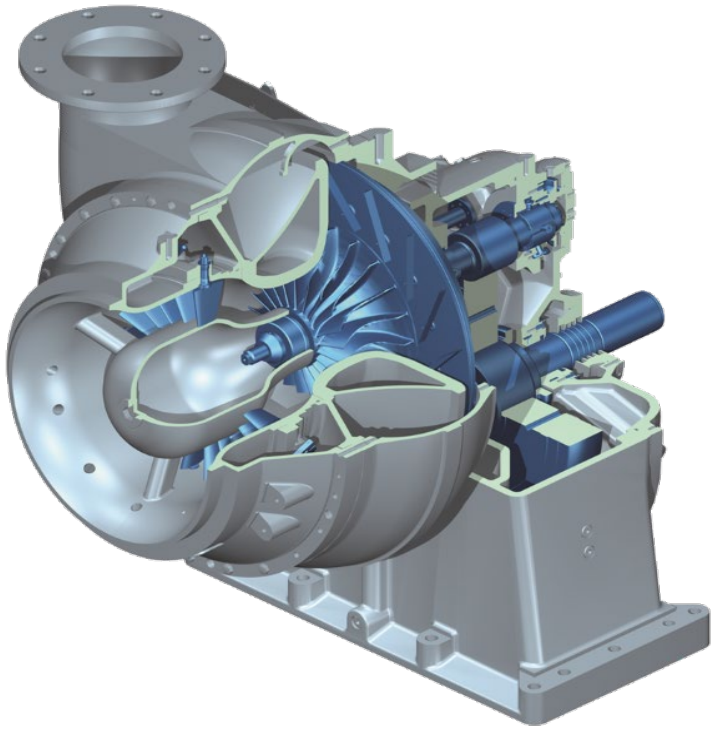

Proposal

City of Surprise SPA 1 WRF Capacity EXP Facility Rerating

Howden Roots LLC, HRO

Proposal to:	**Felix Construction**	**Our reference:**	**HROMWM0012**
For:		**WWE Project:**	**20-018**
Project:	**City of Surprise**	**Date:**	**10/5/2022**

Howden Roots LLC, HRO, 900 W Mount St, Connersville, IN 47331, USA

Tel: +1 417 425-9064
Email: matt.mosier@Howden.com
Web: www.howden.com

Revolving Around You™

Howden

900 W. Mount Road, Connersville, IN 47331

BUDGET QUOTE

Opportunity: City of Surprise SPA1 WRF
Location: Surprise, Arizona
Quote №: HROMWM0012
Date: October 5th, 2022
Engineer: Waterworks Engineers

Represented by: John Deogracias
Goble Sampson
1745 S Alma School Rd, Suite 275
Mesa, AZ 85210
Phone: (480) 220-2327
Email: jdeogracias@goblesampson.com

SECTION 11371 SINGLE STAGE CENTRIFUGAL AIR BLOWERS

Option A: Four (4) Howden high efficiency single-stage centrifugal air blowers model KA22SV-GL225, accessories and controls with variable diffusers for variable output capacity control and inlet guide vanes to provide a dual vane control system for efficiency optimization and minimized power consumption. The blowers are designed for a capacity of 10,533 SCFM at 5.5 psig discharge with 0.5 psig rise-to-surge.

Option B: Five (5) Howden high efficiency single-stage centrifugal air blowers model KA22SV-GL225, accessories and controls with variable diffusers for variable output capacity control and inlet guide vanes to provide a dual vane control system for efficiency optimization and minimized power consumption. The blowers are designed for a capacity of 7,900 SCFM at 5.5 psig discharge with 0.5 psig rise-to-surge.

Standard Major Skid Components (pre-piped and pre-wired):

Howden blower with integral speed increasing gearbox
Option A: 350 HP Premium efficiency induction electric motor: 460v/60hz/3ph ODP enclosure, suitable for reduced voltage start
Option B: 300 HP Premium efficiency induction electric motor: 460v/60hz/3ph ODP enclosure, suitable for reduced voltage start
Coupling and guard
Structural steel base
Oil lube system with mechanical and electrical oil pump, duplex oil filter, and water-to-oil cooler

Standard Skid Instrumentation (pre-piped and pre-wired):

Blower bearing RTDs
Blower vibration X-Y-Z probe
Blower gearbox velomitor
Motor bearing and winding RTDs
Motor bearing housing vibration transmitter (1 per brg.)
Motor current transmitter
Reverse rotation switch
Inlet temperature transmitter
Surge switch
Low/ low-low oil pressure switches
Inlet temperature gauge
Oil temperature gauge
Oil temperature transmitter
Oil pressure transmitter
Oil dirty filter indicator

Shipped Loose Components (for each blower, shipped loose for field mounting and wiring by Contractor):

Inlet and discharge expansion joint
Set of vibration isolation pads
Discharge cone
Discharge pressure transmitter
Discharge temperature transmitter
6” Blow-off valve, 480v/60hz/3ph electric-actuated, wafer
6” Inline blow-off silencer
24” Discharge check valve, wafer type
24” Discharge valve, 480v/60hz/3ph electric-actuated, wafer

Tools and Spare Parts:

Two (2) Set of special tools (one common to all units)
One (1) Set of blower bearings
One (1) Set of motor bearings
One (1) Flexible coupling
One (1) Set of o-rings gaskets and seals
One (1) Actuator for IGV
One (1) Actuator for VDV
Four/Five (4/5) Set of oil filter cartridges
Four/Five (4/5) Set of oil breather cartridges
One (1) PLC Processor
One (1) Set of each PLC Card type used
One (1) Set of each PLC module type used
One (1) PLC power supply, chassis as used.

Local Control Panels (Skid mounted and pre-wired on the blowers):
Each blower includes a skid mounted NEMA 12 Local Control Panel with A-B CompactLogix programmable logic controller that will contain the start-stop permissive sequence, surge alarms, all safety monitoring and shutdown controls. Starters and controls for variable vanes, electric oil pump, and blow-off valves are included. Panel door mounted items include Allen Bradley PanelView 15" color operator interface monitor, main disconnect, and emergency stop. Hourmeter on blower termination enclosure. Howden control panels are configured with connectivity hardware to enable Uptime, Howden's 24/7 remote monitoring and advanced, OEM design-based, performance and reliability analytics platform for process-critical assets. A one year subscription for Howden Uptime monitors the blower's operation and performance to identify operational insights and predict maintenance needs. A 480v/60hz/3ph power supply is required (and the panel is a UL listed assembly).

Paint:
Manufacturer's standard finish.

Start-up Service:
Start-up and operator training is included per Howden standards. Additional service is available per Howden Service Rate schedule.

- One (1) trip – Two (2) days total onsite (assume 8 hr days, Mon-Fri) for unloading and installation
- One (1) trip – Three (3) days total onsite (assume 8 hr days, Mon-Fri) for start-up and commissioning
- One (1) trip – Five (5) days total onsite (assume 8 hr days, Mon-Fri) for training and system operation
- One (1) trip – Five (5) days total onsite (assume 8 hr days, Mon-Fri) for system operation demonstration

Factory Test (Non-witnessed): (for additional or witness testing, contact Howden)
Factory Performance Test – PTC-10 - air-end/gearbox
Functional Control Panel Test
Lubrication System Mechanical Run Test
Motor Routine Test

Payment Terms:
20% upon PO acceptance
40% upon receipt of raw materials, including: gearing, casings, and impellers
20% upon successful completion of blower factory test in Frankenthal, Germany
10% upon successful completion of functional test in Connersville, Indiana
10% at time of final shipment

Terms are 100% of invoiced value without deduction and are due net 30 days. Payment shall not be dependent on Contractor being paid by any third parties. The equipment shall be deemed accepted in the event that the Seller's equipment is placed into commercial operation other than for any required testing and commissioning. Supplier retains the right to file a lien on the equipment or suspend the work in progress due to non-payment by Contractor. Quote is subject to an acceptable credit check.

Drawings and Shipment:
Submittal for approval will be in 10-12 weeks after acceptance of the order by Howden. Shipment will be 34-38 weeks after receipt of submittal approval by Howden.

Howden' price includes for a maximum of three submitted issues of Approval Drawings including finals. If the Customer requests any further amendments to the drawings then Howden may provide further revisions which shall be at the Customer's cost. Howden shall be responsible for any errors, omissions or discrepancies in the drawings unless they are due to incorrect drawings, samples, patterns, models or information supplied by the Customer.

First issues are 'Preliminary', indicating Howden design and scope of supply for the contract, and are dependent on Howden receiving the necessary Customer information with the contract order. Customer to approve or comment on the scope and layout on that basis.

Second issue will follow 2-4 weeks after receipt of comments to the first issue, and will incorporate agreed comments.

A final submission will then be made if necessary to incorporate any additional changes arising during the engineering phase of the contract. When each document is approved by the Customer without comments, the latest issue is considered to be "final". No further issues will be supplied unless further engineering changes occur which affect the document content.

No formal dossier of final drawings is compiled by Howden as standard, but can be arranged at additional cost.

Extended Shipment:
Add one percent (1%) escalation for each partial or full quarter that shipment is extended beyond one year after order acceptance.

Warranty:
Warranties will expire eighteen (18) months after shipment or twelve (12) months after start-up (which shall be the Howden certified date the equipment is available for beneficial use), whichever occurs first. Under no circumstances will the warranty begin upon "beneficial use", completion of the project, or acceptance of the equipment as determined by the engineer or end user. Any and all warranty terms and conditions detailed in the proposal herein shall supersede and/or supplement the warranty language denoted in the Howden standard terms and conditions.

Items Not Included:
Installation, taxes or bonds, oil & lubricants, main motor starters, inlet cone, inlet plenum, inlet filter silencer, anchor bolts, interconnecting pipe, fittings, bolts, nuts, gaskets, wiring, valves, umbilical cords, oil and lubricants, or any other items not specifically listed above.

Comments, Clarifications, and Exceptions:
1. 11371 1.1.A.1. Vibration isolators to be provided instead of anchor bolts
2. 11371 1.1.A.2. Main motor driver starters not provided by Howden per 11371 2.8.A.4.
3. 11371 1.1.A.2. Individual electrical blow-off and discharge valves are provided per blower.
4. 11371 1.1.A.6. IGV and DV assemblies are provided. Howden does not recommend VFD for this application.
5. 11371 2.1.B. Total discharge air flow is assumed to be SCFM.
6. 11371 2.2.A.2. Subsole plates between base and concrete slab to be provided by contractor.
7. 11371 2.2.D.3. Howden standard Aluminum impeller rated to withstand corrosion up to 10 ppm of H2S.
8. 11371 2.2.E,2, Single type RTD’s provided.
9. 11371 2.2.F.7a. Air cooled oil cooler not provided per customer provided P&ID.
10. 11371 2.2.F.2. Oil heater is not required for blower operation. Howden standard design heats up the oil by running the electric oil pump, automatically by the LCP.
11. 11371 2.2.I.2.a. Howden's new standard IGV & VD actuator arrangement uses internal position transmitters which eliminates the necessity of external limit switches, and eliminated the associated calibrated dial position indicator.
12. 11371 2.2.I.2.b. Manual operation and disconnect switch are not available.
13. 11371 2.2.I.3.a. Howden's new standard IGV & VD actuator arrangement uses internal position transmitters which eliminates the necessity of external limit switches, and eliminated the associated calibrated dial position indicator. Manual operation and disconnect switch are not available.
14. 11371 2.6.B.1.e. Carbon steel silencer is provided due to low H2S level present.
15. 11371 2.6.B.2.d.1. Carbon steel silencer is provided due to low H2S level present.
16. 11371 2,6,B,4, RTD provided instead of thermocouple.
17. 11371 2.6.B.5. Pressure transmitter provided instead of pressure switch
18. 11371 B.2. Discharge silencer is not shown on the P&ID and is not provided. Howden’s discharge cone is lined with deep layers of sound absorbing materials to provide silencing per Howden standards.
19. 11371 2.6.C.1. Blow-off port to be located downstream and not on the discharge cone for improved sound attenuation and reduced the required run of blow-off piping to outdoors. Carbon steel silencer is provided due to low H2S level present.
20. 11371 2.8.A.2. Contractor to provide 480/60/3 power supply.
21. 11371 2.11.A.1.g. Inlet filter system not provided by Howden. Replacement filters provided by others.
22. 11371 2.13.A. Oil to be provided by contractor. Howden to specify oil type.
23. 13311 1.8.B.9. Miscellaneous component spares is not included. Additional clarification is required. Are all the components required to assembly a spare LCP to be provided per this specification line?
24. N-40-101 Inlet temperature transmitter to be provided by Howden.

Price:
Price is $**SEE SALES REPRESENTATIVE**, DAP Jobsite, Surprise, Arizona, Per INCO Terms 2020. This proposal is valid for 30 days. This proposal is based upon the included Howden terms and conditions.

Budget Price:
This proposal is a budgetary offer. Under no circumstances shall it establish any obligation on Howden' behalf nor shall it be considered to be a firm or binding offer by Howden. This proposal is based upon the attached Howden terms and conditions as further restricted or limited to the conditions of this proposal.

This proposal is based on following specifications provided: 11371, 13311, 16423, Blower Procurement drawing set. Additional specification will require an additional review by Howden.

STANDARD EQUIPMENT PRICING RECORD: Option A

Quantity/Size/Model №:	Four (4) KA22V-GL225 (see attached ID: 2022-09-15_180710-296)
Capacity of each, SCFM:	10,533 (14.7 psia, 68º F, 36% RH)
Capacity of each, ACFM:	11,696 (14.07 psia, 100°F, 40% RH)
Discharge Pressure, psig:	5.50
Motor HP:	350

Total Base Price, **(U.S. Dollars):**	**$SEE SALES REPRESENTATIVE**

STANDARD EQUIPMENT PRICING RECORD: Option B

Quantity/Size/Model №:	Five (5) KA22V-GL225 (see attached ID: 2020-09-15_183629-182)
Capacity of each, SCFM:	7,900 (14.7 psia, 68º F, 36% RH)
Capacity of each, ACFM:	8,772 (14.07 psia, 100°F, 15% RH)
Discharge Pressure, psig:	5.50
Motor HP:	300

Total Base Price, **(U.S. Dollars):**	**$SEE SALES REPRESENTATIVE**

THE INCLUDED TERMS AND CONDITIONS ARE INCORPORATED HEREIN AND MADE PART OF THE AGREEMENT. PLEASE READ THESE TERMS AND CONDITIONS CAREFULLY.

Matt Mosier
Phone: 417-380-5777

Sales Manager
matt.moiser@howden.com

Matt Martin, Environmental Sales Manager

1. DEFINITIONS

Buyer: means the purchaser, whose name is set out in Howden's quote or as shown in Howden's acceptance of the Buyer's order.
Contract: means the agreement arising as a result of the Buyer's acceptance of Howden's quote, or Howden's acceptance of the Buyer's order, incorporating these terms and conditions.
Contract Price: means the total sum payable as specified in the Contract.
Direct Costs: means such direct costs borne and incurred by Howden associated with the Contract up to and including the date of suspension and/or termination, including but not limited to manufacturing costs, salaries, third party supplier costs and reasonable overhead and profit margin.
Goods: means the equipment, parts or materials as specified in the Contract.
Howden: means the Howden business unit, which bids for, or accepts an order from the Buyer.
Services: means, as set forth in the Contract: (i) Construction Services: the supply of equipment, subcontracted craft labor supplied by and under the direct supervision of Howden, including on-site technical support in a variety of applicable trades and disciplines, to accomplish equipment installation and maintenance service; and/or (ii) Technical Services: supervisory and/or on-site technical support services supplied by Howden.

2. GENERAL

2.1 The Contract shall be subject to these terms and conditions as stated in or referred to in Howden's quote/proposal. Acceptance is made expressly subject to and conditioned upon acceptance of these North American Standard Terms and Conditions for Goods and Services. Any conflicting or additional terms submitted by Buyer in any request for quote, inquiry, purchase order or other contract document are expressly objected to without the need of any further notice of objection and they shall not, under any circumstances, be binding upon Howden unless expressly accepted in writing by Howden. In the event of any conflict with Buyer's order terms, these terms shall in all cases prevail. Acceptance shall not be delayed due to additions, minor omissions or defects that do not materially affect the use of the Goods.

3. PERFORMANCE

3.1 Any figures quoted by Howden for performance are based on Howden's experience and are such as Howden expects to attain on test. Howden will accept no liability for failure to attain any such figures unless Howden has specifically guaranteed them, subject to any tolerances specified or agreed to by Howden. If Howden specifically agrees in writing to guarantee performance, Howden is only responsible for proven performance deficiencies after Howden has been given notice and a reasonable opportunity to correct the deficiencies, and only if, and to the extent, Howden has agreed in writing to a liquidated damage clause which shall not in any event result in Howden incurring liability in excess of the Contract Price.

4. INSPECTIONS AND TESTS

4.1 Howden products are carefully inspected and where practicable, subject to Howden's standard tests before dispatch. If tests other than those specified in Howden's quote or tests in the presence of the Buyer or the Buyer's representative are required, these will be at additional cost to the Buyer. In the event the Buyer delays in carrying out any inspection or attending such tests after being given at least forty-eight (48) hours' notice that Howden is ready to test, the inspection or tests will proceed in the Buyer's absence and shall be deemed to have been made in the Buyer's presence and the results accepted by the Buyer.

5. DELIVERY

5.1 Unless otherwise agreed, delivery shall be Ex-Works in accordance with Incoterms 2020, and partial deliveries shall be acceptable to the Buyer.

5.2 In the event that Howden is unable to achieve the agreed Incoterms for reasons attributable to the Buyer within fourteen (14) days from notification of Goods readiness, Howden shall be entitled to invoice the Buyer and receive payment. Furthermore, after this fourteen (14) day period, storage costs will be chargeable to the Buyer in accordance with Section 6.1.

6. STORAGE

6.1 If the Buyer, for reasons not attributable to or beyond the control of Howden, is unable to: (i) take delivery of the Goods; (ii) arrange storage; or (iii) where applicable, give Howden its forwarding instructions to enable the dispatch of the Goods within fourteen (14) days from notification of Goods readiness, Howden may provide for storage of the Goods or arrange warehousing on the Buyer's behalf, in each instance at the Buyer's risk and cost. All such charges shall be due and payable by the Buyer on receipt of a simple receipt from Howden or the warehouse keeper as evidence of such storage or warehousing.

7. TITLE AND RISK

7.1 Legal and beneficial ownership (title) of the Goods shall remain vested in Howden until full payment of the Contract Price has been made by the Buyer.

7.2 The Goods will be at the Buyer's risk from the date of delivery, or if delivery is delayed by the Buyer for any reason, risk will transfer to the Buyer from the date that delivery should have taken place.

8. SUBCONTRACTING

8.1 At its option, Howden may arrange for the manufacture of proprietary and subcontracted Goods and/or assembly, testing or any site related Services to be carried out by Howden (Howden manufacturing facilities operate Quality Management Systems compliant with EN ISO 9001), and/or Howden's choice of approved subcontractor. Any assignment by Buyer of the Contract without the express written permission of Howden shall be null and void.

9. TERMS OF PAYMENT

9.1 Unless otherwise agreed, payment shall be made within thirty (30) days from the date of Howden's invoice by electronic funds transfer (EFT) or automated clearing house (ACH) transaction.

9.2 Should any payment fall into arrears, Howden is entitled to postpone or cancel performance of the Contract wholly or in part and to be paid immediately for performance of the Contract to date (without obligation for liquidated damages, if applicable, incurred due to such termination).

9.3 Howden reserves the right to charge late fees at the lesser of the rate of 1.5% per month (18% per annum) or the maximum amount permitted by law, and require Buyer to pay all of Howden's collection costs.

9.4 No claim by the Buyer under warranty or otherwise shall entitle the Buyer to any deduction, retention or withholding of any part of the Contract Price. The terms of payment must be adhered to and any such claims handled separately.

9.5 For milestone payments required under this Contract, Howden may invoice on the original milestone completion date if the milestone is not met due to Buyer's fault, untimely response or unreasonable delay. In the event that Buyer seeks to modify the Contract, Buyer agrees to make payments in accordance with the original contract terms until such time as modification is mutually agreed upon. Howden only waives claims for payment to the extent that such payments have been received by Howden. If, in Howden's reasonable opinion, Buyer's financial condition may jeopardize full or timely payment, Howden may: (i) require full or partial payment as a condition to commencing or continuing its performance (including in advance of any shipment); or (ii) recover Goods from the carrier, if shipment has been made.

9.6 Buyer shall be responsible for all sales, use, value added and similar taxes ("Sales Taxes") required on the Goods and Services, which shall be in addition to the consideration payable for such Goods and Services. If Howden invoices Buyer for such Sales Taxes, then Buyer shall pay such amounts to Howden concurrent with the payment of the consideration upon which such Sales Taxes are calculated. If Howden does not invoice Buyer for such Sales Taxes, Buyer shall report and remit such Sales Taxes directly to the appropriate taxing authority within the time period required by law and shall provide evidence of such remittance to Howden upon request. Buyer shall be responsible for all import, export, customs duties, fees and similar charges ("Duties") in respect of the Goods and Services, and if Howden is required to pay any amount of Duties in respect of the Goods and Services, then Buyer shall reimburse Howden for such amount upon request.

9.7 Howden reserves the right to adjust the Contract Price if Howden incurs extra costs due to changes or delays caused by Buyer. If, during the performance of this Contract, the price of raw materials significantly increases through no fault of Howden, the price of the Goods shall be equitably adjusted by an amount reasonably necessary to cover any such significant price increases. As used herein, a significant price increase shall mean any raw material increase in price exceeding 5% experienced by Howden from the date of the Contract. Where the delivery of Goods is delayed through no fault of Howden, as a result of the shortage or unavailability of raw materials, Howden shall not be liable for any additional costs or damages associated with such delay(s). If a supplier increases the price of its equipment incorporated into the Goods during production, Buyer acknowledges that Howden may increase the price of the Goods accordingly. Such price increases shall be documented through quotes, invoices, or receipts.

10. CONTRACT CHANGES

10.1 In the event of a change to the Contract ("CO") resulting in an extension to the delivery date(s) which will impact Howden's invoice schedule, Howden reserve the right to invoice the Buyer for the original Contract Price in accordance with the most recent project plan, prior to the CO. Previous invoice milestones will be adjusted pro-rata and invoiced upon Howden's acceptance of the CO. Howden shall be entitled to an equitable adjustment for any increased cost and an adequate extension of time required by Howden to complete the Contract in accordance with any CO.

10.2 If Howden deems it necessary to vary any aspect of the Goods and/or the Contract due to an unforeseen change in any applicable law, local regulation or standard becoming effective or taking place after conclusion of the Contract, Howden shall inform the Buyer in writing defining explicitly the changes deemed necessary. In this case, Howden shall be entitled to an equitable adjustment for any increased cost and an adequate extension of time required by Howden to complete the Contract in accordance with any applicable law, local regulation or standard.

11. LIABILITY FOR DELAY

11.1. Any lead times quoted by Howden shall run from Howden's acceptance of the Buyer's order and/or on Howden's receipt of all necessary information to enable Howden to commence work under the Contract, whichever is later, and shall be subject to continued and timely performance from the Buyer.

11.2 Should Howden agree in the Contract to pay Buyer any liquidated damages, such liquidated damages shall be the Buyer's sole and exclusive remedy in the event of Howden's delay.

11.3 If Howden is delayed in its performance of the Contract solely attributable to the fault of the Buyer, the Buyer's agent and/or other contractors, Howden is entitled to receive payment at the time Howden was originally scheduled to be paid notwithstanding the delay. Shipments held beyond the scheduled date at the request or fault of Buyer may be billed immediately to Buyer including reasonable expenses incident to such delay, and Buyer shall assume the risk of loss thereof.

12. SERVICES

12.1 Technical Services. The following provisions shall apply where the Contract includes Technical Services:

(i) Buyer shall be responsible for furnishing all fully qualified labor, equipment, materials, tools and supplies for implementation of such Technical Services required at site as specified in the Contract.

(ii) Howden's sole responsibility in providing Technical Services shall be to provide suitably qualified supervisor(s) who shall give the Buyer the benefit of their technical expertise with the Goods or similar installations and who shall advise the Buyer's personnel as to the installation in an efficient manner. It shall be the Buyer's sole responsibility to carry out installation and to achieve the desired work schedules, timescales and quality of workmanship for installation using appropriately qualified workmen in sufficient numbers to achieve the task.

(iii) Howden shall not be responsible for any overruns in the installation and the Buyer shall not be entitled to instruct Howden's supervisor(s) to undertake any work in addition to supervision, whether or not necessary to achieve such installation.

(iv) If, due to any overruns in the timescales for installation, Howden is required to keep its supervisor(s) on site for longer than anticipated, Howden shall be entitled to charge for the further site attendance at Howden's standard daily rate.

(v) If the Technical Services work is suspended by the Buyer or for any reason beyond Howden's control for more than two (2) working days, Howden shall be entitled to withdraw its supervisor(s) from site. If the Buyer requires Howden's attendance on site thereafter, the Buyer will pay the supervisor(s) return travel fares (business class) and any other reasonable costs Howden incurs due to the withdrawal from, and the return to, the site.

12.2 Construction Services. The following provisions shall apply where the Contract includes Construction Services:

(i) Howden shall provide specialized and trained subcontractor craft labor to perform the Construction Services work under the direct supervision and management of Howden.

(ii) Fixed price or time and material contracts are quoted separately based on a specific individual statements of work.

13. ALL SERVICES

13.1 Unless specified in the Contract, Howden is only the supplier of the Goods and shall have no responsibility for the assembly and installation of Goods.

13.2 For all Services provided by Howden, Buyer agrees to the following: (i) where the site is offshore or otherwise inaccessible or is located overseas, provide all necessary transportation facilities to and from site; and (ii) obtain all necessary statutory and other consents, approvals, licences and permissions for Services, for the work to proceed, and for Howden personnel to travel to and from the site.

13.3 The Buyer shall indemnify Howden against any loss, damage or injury including death suffered by the person or property of Howden, its subcontractor, the Buyer, or respective personnel or any third party and against any claims, liability, costs or expenses associated therewith or arising out of the Buyer's performance of Services or the Buyer's failure to perform or otherwise, except as expressly provided under Section 17.1, including, but not limited to, that which was caused by faulty lifting tackle, scaffolding, equipment and/or other facilities provided by the Buyer.

13.4 Howden's on site personnel, subcontractors and/or representatives shall be given unobstructed access to the site and the work. If there are delays caused by anyone other than Howden, the time and expense of the same shall be charged to the Buyer.

13.5 Howden is an independent contractor and is not responsible for any oversight for completion of the Services, or for the property or employees of the Buyer or others, including, without limitation, matters such as health and safety, or security.

13.6 Howden shall comply with applicable Canadian, U.S. and/or provincial/territorial/state/local statutes, acts, ordinances, regulations, codes, and laws that apply to Howden's performance of the Services. Howden shall comply with job/site requirements as mutually agreed upon by the parties. Buyer shall advise Howden's personnel in advance of all known and/or suspected hazardous/unsafe conditions and risks that may be encountered while on-site, including proper Material Safety Data Sheets (MSDS). Howden's personnel shall not be required to take any action, or to enter or remain in any area where he/she reasonably determines that it would be unsafe. In such instance, Howden shall be excused from site attendance and the event will be considered a Force Majeure.

13.7 Any associated Goods shall be considered accepted at the earlier of: (i) when Services is complete and the Goods have completed such tests as are specified in the Contract or otherwise are to Howden's reasonable satisfaction; and (ii) forty five (45) days after the Goods have been delivered by Howden, although not installed or successfully commissioned or tested due to reasons attributable to the Buyer or to industrial action or anything beyond Howden's reasonable control.

14. SUSPENSION

14.1 The Buyer shall have the right to suspend the Contract. If the suspension period should exceed thirty (30) days, Howden has the right to consider the Contract terminated for convenience and be compensated in accordance with Section 15.1. Upon resumption of performance, Howden shall have the right to equitable relief as necessary in accordance with Section 10.

15. TERMINATION

15.1 Buyer may terminate this Contract, in whole or in part, upon at least seven (7) calendar days advanced written notice to Howden. In the event of termination for Buyer's convenience, Howden shall be reimbursed for the reasonable Direct Costs incurred by Howden in performing the Contract until termination and for its costs in effecting such termination notwithstanding any other provision of the Contract. Any Goods or Services sold by Howden that are incomplete shall be deemed to be sold "AS IS," "and "WITHOUT WARRANTY OR GUARANTEE OF ANY KIND."

15.2 If Howden fails to cure a material breach within a reasonable time after receipt of notice of breach from Buyer, and on Howden's acceptance of such breach, Buyer shall have the right, at its option, to terminate the Contract upon payment to Howden for work performed until the time of termination.

15.3 Howden may cancel this Contract, in whole or in part, at any time if: (i) Buyer suspends work or delays delivery in accordance with Section 14.1 beyond 45 days without it being mutually agreed upon in advance; (ii) Buyer breaches any material term of this Contract; and/or (3) Buyer files bankruptcy or otherwise fails to either make full and timely payments, meet its obligations, or provide further assurances.

16. WARRANTY

16.1 Howden warrants that: (i) any Goods provided hereunder will be of good material and workmanship; (ii) any Services provided by Howden shall be performed by competent and qualified personnel in a professional and workmanlike manner in accordance with generally established industry standards; and (iii) the Goods and/or Services supplied by Howden hereunder will conform to any applicable technical specifications and/or drawings that have been agreed upon between the parties as set forth in the Contract.

16.2 In the event that defects appear in the Goods under proper use, Buyer's sole and exclusive remedy thereof shall be that Howden will repair or replace such Goods at Howden's option and cost (but not including transportation, removal, reinstallation, and decontamination) within the warranty period set forth in the Contract. Unless otherwise expressly agreed, the warranty for Goods shall be whichever period expires earlier: (i) twelve (12) months from first operation of any such Goods; or (ii) eighteen (18) months from Howden's delivery date (at the applicable Incoterms point of delivery quoted by Howden).

16.3 Howden's warranty on Services performed by Howden will be in effect: (i) until ninety (90) days after the date of performance of any Technical Services; and (ii) one year after the date of performance of any Construction Services. The Buyer's sole and exclusive remedy for breach thereof shall be the re-performance of such Services by Howden.

16.4 Howden's warranty shall exclude liability for defects arising from: (i) installation, commissioning and/or operation, not in accordance with Howden's O&M manual or good industry practice; (ii) use of unapproved spares, unauthorized modification or alteration of the Goods; (iii) normal wear and tear; (iv) the failure of Buyer and/or the end-user to provide adequate storage; or (v) use of the equipment otherwise than in accordance with the agreed operational parameters (including composition, pressure and temperature of the feed gas). No part shall be deemed defective by reason of its failure to resist fouling and the action of erosive or corrosive gases.

16.5 Any warranty repair or replacement of Goods or re-performance of Services shall be warranted by Howden for the remainder of the original warranty period. No "evergreen" or "in-place" warranty is being provided.

16.6 Howden shall have the sole right to specify the manner and timeframe for such repair/replacement/ re-performance. Defective/non-conforming parts(s)/Goods must be returned to Howden free of all contaminants and, in the event of replacement, will become the property of Howden unless Howden instructs otherwise. If Howden opts to perform any warranty obligations in-place, Buyer shall, without cost to Howden, during a specified time period agreed upon by the parties, provide access by disassembling, removing, replacing, and reinstalling any equipment, structures, or other obstructions to the extent necessary to permit Howden to perform its warranty obligations.

16.7 THERE ARE NO WARRANTIES, CONDITIONS, GUARANTEES, REPRESENTATIONS, OR REMEDIES THAT EXTEND BEYOND THESE TERMS AND CONDITIONS. ALL OTHER WARRANTIES, CONDITIONS, GUARANTEES, REPRESENTATIONS, OR REMEDIES EXPRESS OR IMPLIED, STATUTORY OR OTHERWISE (INCLUDING ANY CONDITION OR WARRANTY OF MERCHANTABILITY OR OF FITNESS FOR A PARTICULAR PURPOSE) NOT EXPRESSLY SET FORTH HEREIN, ARE FULLY DISCLAIMED AND EXCLUDED TO THE FULLEST EXTENT PERMITTED BY LAW. HOWDEN'S WARRANTIES DO NOT COVER ANY GOODS OR SERVICES THAT HAVE BEEN ALTERED OR SUBJECTED TO ACCIDENT OR IMPROPER STORAGE, INSTALLATION, ASSEMBLY, COMMISSIONING, MAINTENANCE, USE OR APPLICATION. HOWDEN DOES NOT WARRANT THAT THE GOODS WILL RESIST THE ACTION OF EROSIVE OR CORROSIVE GASES, LIQUIDS, OR SOLIDS, OR PRODUCE RESULTS IN COMPLIANCE WITH ANY LAWS, DECREES, OR OTHER STANDARDS.

17. LIABILITY FOR ACCIDENTS AND DAMAGE

17.1 Howden will indemnify Buyer from non-nuclear claims brought by third parties against Buyer for (i) bodily injury (including death); and (ii) property damage, each only to the extent directly caused by the negligence of Howden. Howden shall not be responsible for the acts/omissions of Buyer or others. Howden's indemnity obligations shall not apply to Buyer property or any nuclear activity/incident.

18. INSURANCE

18.1 Howden shall maintain the following insurance coverage: (1) Commercial General Liability with limits of $1,000,000 combined single limit occurrence for Bodily Injury, Physical Property Damage of third party property, and Contractual Liability coverage, subject to an annual aggregate of $2,000,000; (2) Automobile Liability – Bodily Injury/Physical Property Damage in the amount of $1,000,000 combined single limit each occurrence; and (3) Workers Compensation Insurance – statutory, as to Howden's employees. If requested, Howden will provide an ACORD form of certificate confirming such coverage. Howden's provision of a certificate of insurance in accordance with Buyer's site requirements does not constitute Howden's acceptance of Buyer's terms of purchase. Howden shall have no other or further obligations related to insurance or coverage.

19. LIMITATION OF LIABILITY AND EXCLUSION OF CONSEQUENTIAL DAMAGES

19.1 Notwithstanding anything to the contrary contained herein or elsewhere in the Contract and save to the extent this limitation is prohibited by law:

(i) Howden's total liability pursuant to this Contract whether by way of indemnity, for breach of Contract, warranty or guarantee obligations or by reason of any tort, statute or otherwise shall in no event exceed the Contract Price.

(ii) Howden shall not be liable to Buyer, end-user or any third party, for any indirect, punitive or consequential damages of any kind or nature whatsoever, or for loss of profits/revenue or loss of production, regardless of whether such damages are based upon Contract, tort, strict liability in tort, negligence or indemnity.

This Section shall survive any termination, default, cancellation or any other discontinuance of this Contract.

19.2 Any duty to indemnify under these terms and conditions/the Contract is conditioned upon Buyer: (i) making no statement prejudicial to Howden; (ii) providing prompt and detailed notice to Howden of any such claim; (iii) tendering the defense/settlement to Howden with sole control over the same; and (iv) providing full cooperation, authority, and assistance to Howden.

19.3 Buyer's rights and remedies shall be deemed sole and exclusive and in place of those at law and equity. The exclusions and limitations set forth in these terms and conditions shall control at all times and survive any breach or termination of the Contract. If any provision of these terms and conditions of this Contract or part thereof shall be held by judicial determination to be invalid or unenforceable they shall be severed from this Contract and the valid or enforceable parts of these terms and conditions shall continue in full force and effect.

20. NO HAZARDOUS SUBSTANCES

20.1 Howden warrants to the Buyer that no Hazardous Substance will be used or is contained in the manufacture and supply of the Goods. For the purpose of this Section 20.1, a "Hazardous Substance" means asbestos or any material containing asbestos that is capable of causing harm to the natural and man-made environment including all or any of the following media: air (including air within buildings and other natural or man-made structures above or below the ground), water, land, and any ecological systems and living organisms (including man) supported by those media, and in the case of people, this includes offense caused to any of their senses or harm to their property.

21. INTELLECTUAL PROPERTY

21.1 Howden will indemnify the Buyer against any claim for infringement of copyright, patent, registered design or trade mark (published at the date of the Contract) by the use or sale of any Goods supplied by Howden to the Buyer and against all

costs and damages which the Buyer may incur in any action for such infringement or for which the Buyer may become liable in any such action. This indemnity shall not apply to any infringement which is due to: (i) Howden having followed a design, process or instruction furnished or given by the Buyer; (ii) the use of such article or material in a manner, or for a purpose, or in a country, not specified or disclosed to Howden; or (iii) the use of such article or material in association or combination with any other article or material not supplied by Howden. This indemnity is conditional on the Buyer giving Howden the earliest possible notice in writing of any claim being made or action threatened or brought against the Buyer and on the Buyer permitting Howden, at its own expense, to conduct any litigation that may ensue and all negotiations for a settlement of the claim. The Buyer warrants that any design or instruction furnished or given by the Buyer shall not cause Howden to infringe any copyright, letters patent, registered design or trademark in the execution of the Contract. If as a result of any such claim of infringement, the continued use of the Goods for the purpose intended is enjoined by any court of competent jurisdiction, Howden shall, at its option and expense: (i) procure for Buyer the right to continue using such Goods; (ii) replace or modify the Goods so that the Goods become non-infringing; or (iii) refund the purchase price of the infringing Goods. The foregoing is the sole remedy of Howden with respect to infringement.

21.2 All patents, copyright and other intellectual property rights in or relating to the Goods or their design or the specifications, drawings, manuals or information prepared or supplied by Howden, or which arise under or in the course of Howden'sperformance of the Contract, are, shall be and shall remain Howden's absolute property and shall not be used or reproduced without Howden's consent in writing. Howden shall grant the Buyer a royalty free licence to use such intellectual property rights for the sole purpose of operating and maintaining the Goods. Notwithstanding any other provisions or requirements of this Contract, except as set forth in this Section 21.1, no intellectual property or proprietary information is being sold, granted, transferred, licensed, or assigned; there are no works-made-for-hire or unrestricted use (any government rights shall be "limited rights"). Buyer shall not reverse engineer or otherwise attempt to re-create the Goods/Services.

22. CONFIDENTIALITY

22.1 Any specifications, drawings, manuals, information or particulars supplied with Howden's quote or under the Contract are supplied by Howden in confidence. They shall not be used by the Buyer except for the purposes of the Contract and for the proper use of the Goods and shall not be disclosed by the Buyer to any third party (except the Buyer's employees having a need to know for the aforesaid purposes) for any other purpose whatsoever without Howden's prior written agreement. The foregoing shall not apply to information which is or becomes public knowledge without fault or failure by the Buyer or its employees.

23. EXPORT CONTROL

23.1 The Buyer agrees that it will not participate directly or indirectly in the sale, resale, export, transfer or disposal of Howden products or technology ("Products") to any entity or to any country in breach of applicable export control and sanctions laws including but not limited to those of the US, Canada or other countries (together "Export Control and Sanctions Rules") and the Buyer will not sell, resell, export, transfer, dispose or otherwise deal with the Products to any country, destination or person without first obtaining any required export licence or other governmental approval, and completing such formalities as may be required by Export Control and Sanctions Rules. The Buyer shall not put the Products in their entirety or in part to any use in connection with any prohibited or illicit end use including, but not limited to, use in nuclear, chemical or biological weapons or rocket or missile applications. Upon Howden's request, the Buyer shall provide information in response to any reasonable request (including a written certification) regarding compliance with applicable laws, rules or regulations and/or in connection with any applications made by Howden to the authorities in connection with the export or supply of the Products. Failure by the Buyer to comply with the terms of this clause shall constitute a material breach of the Contract. Howden reserve the right to refuse to enter into or to perform any order, to cancel any order, or to void any warranty concerning the Products, if Howden determines, at its sole discretion, that the entry into such order or the performance of the transaction to which such order relates would be unlawful or be at risk of prohibition by any Export Control and Sanctions Rules. Howden shall be excused from performance, and not be liable for damages or costs of any kind including, but not limited to, liquidated damages and/or penalties for late delivery, for failure to deliver or delay in delivering the Products, or for delay or refusal to repair or replace under any warranty, resulting from Howden's exercise of its rights in accordance with this Section 23.1.

23.2 Buyer warrants that it or any ultimate end user does not intend to use the Goods or Services in any atomic/nuclear installation or activity. If such use is intended, Buyer shall notify Howden prior to entering into any contract with Howden and shall agree to standard nuclear indemnity obligations related thereto. Any breach of this warranty shall release Howden from performance and any and all liabilities of any nature under the Contract and obligate Buyer to execute an amendment to this Contract incorporating such nuclear indemnity obligations prior to any performance by Howden.

24. FORCE MAJEURE

24.1 Neither party shall be considered in default or in breach of its obligations under the Contract to the extent that performance of such obligations is prevented or delayed by any circumstances outside its reasonable control including, without limitation: strikes, lock-outs or other industrial disputes, act of God, war, riot, civil commotion, malicious damage, compliance with any law or governmental order, rule, regulation or direction, embargoes, economic or trade sanctions, including any amendments to such embargoes and economic and trade sanctions, accidental breakdown of plant or machinery, fire, flood, storm, disease outbreak or epidemic and/or any resulting quarantine restrictions ("Force Majeure"). Either party shall be entitled to terminate the Contract if the Force Majeure situation continues, or it is obvious that it will continue, for more than one hundred and eighty (180) days without liability to the other party. Furthermore, should both parties agree that they want to continue the Contract when reasonably practicable to do so, notwithstanding the aforementioned 180 day period being reached, the parties will agree in good faith to renegotiate any necessary Contract amendment(s) to allow the Contract to continue.

25. LAW AND JURISDICTION

25.1 The Contract shall in all respects operate and be governed by New York law if the Howden business's principal office is located in the US and Ontario if the Howden business's office is located in Canada.

25.2 The official language of this Agreement is English. It is the express wish of the parties that this Agreement and any related documents be drafted and executed in English. Il est la volonté expresse des parties que cette convention et tous les documents s'y rattachant soient rédigés et signés en anglais.

25.3 **If the Howden business's principal office is located in the United States:** All disputes arising out of or in connection with this Contract, including any question regarding its existence, validity or termination, shall be referred to and finally resolved by arbitration conducted in accordance with the rules and procedures of the American Arbitration Association and any award or adjudication rendered thereby shall be final, non-reviewable, non-appealable and binding upon the parties. The language to be used in the arbitral proceedings shall be the English language. The arbitration shall take place in the City of New York in the State of New York.

If the Howden business's principal office is located in Canada: All disputes arising out of or in connection with this Contract, including any question regarding its existence, validity or termination, shall be referred to and finally resolved by arbitration conducted in accordance with the Ontario Arbitration Act, S.O. 1991, c.17 and the rules and procedures of the Canadian Arbitration Association then in effect. The award or adjudication rendered by the Arbitrator shall be final and binding upon the parties, with no right of appeal. The language to be used in the arbitral proceedings shall be the English language. The arbitration shall take place in the City of Toronto in the Province of Ontario.

25.4 The Uniform Law on the International Sale of Goods shall not apply to any Contract arising from any order placed under these terms and conditions**.**

26. ENTIRE AGREEMENT

26.1 This Contract contains the entire understanding of the parties with respect to the subject matter hereof and supersedes any and all prior negotiations, contracts, commitments, and writings with respect thereto. There are no oral understandings, terms or conditions and neither party has relied upon any representation, express or implied, not contained in this Contract

27. DATA PROTECTION

27.1 The personal data disclosed by a party under the course of the Contract does not belong to the recipient of such data. The data must be protected and shall not be disclosed to any third party, or altered, violated or used except for the purposes of the Contract. Either party may require the destruction of this data upon the end of the relationship between the parties. The parties undertake to comply with all applicable laws on the protection of personal data.

Howden Roots LLC Field Service Rates

HRO-S – US dollars (USD)

*All intellectual property rights are reserved to HUSA and/or the respective owner(s) (if different).

Services Provided: ☐ Inspections ☐ Maintenance ☐ Field Repairs ☐ Balancing ☐ Site Supervision ☐ Project Management ☐ Start Up ☐ Installation Supervision

A. Rates for service in Continental North America U.S. Dollars (USD):

Days	Field Service Technician		Engineering Personnel	
Monday thru Saturday (except holidays)	First 40 Hours	$175/hour	First 40 Hours	$270/hour
	Over 40 Hours	$265/hour	Over 40 Hours	$400/hour
Sunday, and locally recognized holidays	All Hours	$350/hour	All Hours	$540/hour

B. Rates for service outside Continental North America U.S. Dollars (USD):

Days	Field Service Technician		Engineering Personnel	
Monday thru Saturday (except holidays)	First 40 Hours	$210/hour	First 40 Hours	$280/hour
	Over 40 Hours	$320/hour	Over 40 Hours	$425/hour
Sunday, and locally recognized holidays.	All Hours	$425/hour	All Hours	$560/hour

C. Service and Travel Standards (USD)

1. The minimum time off for a person during any 24-hour period must be ten (10) consecutive hours.
2. Travel time, whether during first 40 hours or over 40 hours, will be invoiced at the Monday through Saturday Field Service Technician rates in Tables "A" & "B". Travel in Continental North America is invoiced actual travel time.
   Travel outside Continental North America is invoiced actual travel time. Actual travel time on holidays or tothe jobsite on Sundays will be at the Field Service Technician Sunday and Holiday rate in Tables "A" & "B"
3. Standby time at job site, locally on call, training, or meetings will be invoiced as time worked and be based on Tables "A" & "B". Weekend waiting rate will be 8 hours per day invoiced at the Field Service Technician first 40-hour rate in Tables "A" & "B".
4. Rates apply from time and date of departure home base to time and date of return home base.
5. Minimum daily charge is eight (8) hours at "First 40 Hours" rate listed above is sections A and B.
6. When a project is expected to exceed 5 continuous weeks, then after 3 weeks the Buyer will allow an extended weekend leave or rotation of personnel. Travel fees shall be by Buyer.
7. Air travel on flight segments exceeding 12 hours will be business class and shall be paid by Buyer. Air travel on flight segments exceeding 4 hours will be premium economy and shall be paid by Buyer.
8. Payments shall be in U.S. funds unless otherwise agreed in writing
9. Rates quoted are subject to adjustment without notice to conform to Seller's published rates in effect at the time service is performed.
10. Howden may offer a priority service when the relevant Howden personnel are available, for emergency or breakdown callouts. An additional 30% of the applicable labor rate will be charged where Howden personnel are requested and able to be mobilized within 24 hours of the request being received.

CI. Expenses (USD)

1. Meals will be $75/day per diem to be charged from the day of travel start to the day of travel end.
2. Lodging, incidental expenses, transportation to and from the city nearest the jobsite, plus local transportation will be invoiced at cost plus 20% administrative fee. Receipt(s) to be provided when any expense exceeds $60.00.
3. Transportation to and from the city nearest the jobsite, plus local transportation will be charged at cost plus 20% administrative fee. The mileage allowance for personal car use will be current U.S. government rate per mile.
4. Tool usage, when required, will be charged at a rate of $350 per trip.
5. Expenses for Airline travel shall be charged at cost Plus a 20% administrative fee (Administrative fee shall not exceed $500).

CII. Terms and Conditions

The sale of services by Howden Roots LLC ("Seller") is subject to Seller's Terms for Sale of Goods and if such terms differ in any way from Buyer's order, or if such terms are construed as an acceptance or confirmation acting as an acceptance, then Seller's acceptance is expressly made conditional on Buyer's assent to any terms or conditions contained in Seller's terms that are different from or additional to those contained in Buyer's writing. Further, this quote shall be deemed notice of objection to such terms and conditions of Buyer. If this quote is construed as the offer, acceptance of same is expressly limited to the terms and conditions contained herein. In any event, Buyer's order of the services shall constitute and manifest Buyer's assent to Seller's Terms for Sale of Goods.

TURBLEX

Turbo Performance data
Dual Vane

ID: 2022-09-15_180710-296

Project: : Surprise WRF, AZ

HV-TURBO Environmental Compressor: KA22SV-GL225
Powersupply : E-motor, RPM = 3600
with Variable diffuser: for Flow regulation
and with Variable Guidevanes : for minimizing Power consumption.

Inlet Conditions:
Pressure: see Table, Temperature: see Table., relative Humidity : see Table.
Volume flow : 10533 scfm (@14.7 psia,36 % rh, 68 deg.

press. P0 psia	press. P2 psia	Inlet-flow %	Compressorperformance and Power consumption on the Motorshaft at Inlet conditions : 100.00 °F 15 % RH acfm	hp	100.00 °F 40 % RH acfm	hp	75.00 °F 40 % RH acfm	hp	45.00 °F 60 % RH acfm	hp	40.00 °F 60 % RH acfm	hp
14.070	19.570	100.0	11696	316.9	11899	322.2	11197	307.9	10506	292.6	10390	290.2
14.070	19.570	80.0	9357	252.5	9519	256.4	8958	241.5	8405	231.2	8312	229.7
14.070	19.570	60.0	7017	194.1	7139	197.4	6718	187.0	6303	179.6	6234	178.5
14.070	19.570	45.0	5263	154.5	5354	156.8	5039	148.5	4728	141.1	4676	140.0
14.070	19.170	45.0	5263	145.2	5354	147.3	5039	140.6	4728	135.6	4676	134.9
14.070	19.370	100.0	11696	312.1	11899	317.5	11197	302.2	10506	287.4	10390	284.9
14.070	19.370	80.0	9357	244.7	9519	249.0	8958	236.3	8405	227.0	8312	225.7
14.070	19.370	60.0	7017	188.2	7139	190.9	6718	181.8	6303	175.1	6234	174.0
14.070	19.370	45.0	5263	149.0	5354	151.1	5039	144.5	4728	138.2	4676	137.4
14.070	19.370	45.0	5263	149.0	5354	151.1	5039	144.5	4728	138.2	4676	137.4
14.070	19.270	100.0	11696	309.5	11899	315.0	11197	299.3	10506	284.7	10390	282.3
14.070	19.270	80.0	9357	242.1	9519	246.3	8958	233.9	8405	225.2	8312	223.8
14.070	19.270	60.0	7017	185.2	7139	187.9	6718	179.6	6303	173.4	6234	172.4
14.070	19.270	45.0	5263	147.5	5354	149.1	5039	142.4	4728	136.9	4676	136.2
14.070	19.270	45.0	5263	147.5	5354	149.1	5039	142.4	4728	136.9	4676	136.2

- Inlet pressure drop 0.20 psid
- All losses incl. mech. oil pump are included.
- For ASME PTC-10 TORQUE METER TEST
  with power tolerance of + 0% /- 4%.

Preliminary

CONFIDENTIAL

Howden

v1.82 40060

TURBLEX

Turbo Performance data
Dual Vane

ID: 2022-09-15_183629-182

Project: : Surprise WRF, AZ

HV-TURBO Environmental Compressor: KA22SV-GL225
Powersupply : E-motor, RPM = 3600
with Variable diffuser: for Flow regulation
and with Variable Guidevanes : for minimizing Power consumption.

Inlet Conditions:
Pressure: see Table, Temperature: see Table., relative Humidity : see Table.
Volume flow : 7900 scfm (@14.7 psia,36 % rh, 68 deg.

press. P0 psia	press. P2 psia	Inlet-flow %	Compressorperformance and Power consumption on the Motorshaft at Inlet conditions : 100.00 °F 15 % RH acfm	hp	75.00 °F 40 % RH acfm	hp	45.00 °F 60 % RH acfm	hp	40.00 °F 60 % RH acfm	hp	40.00 °F 60 % RH acfm	hp
14.070	19.570	100.0	8772	245.1	8398	238.3	7880	226.6	7793	224.7	7779	224.3
14.070	19.570	80.0	7018	195.9	6718	187.5	6304	179.6	6234	178.5	6223	178.3
14.070	19.570	60.0	5263	151.3	5039	146.2	4728	140.5	4676	139.7	4668	139.5
14.070	19.570	45.0	3947	121.3	3779	116.8	3546	111.1	3507	110.3	3501	110.2
14.070	19.170	60.0	5263	142.0	5039	139.1	4728	134.6	4676	133.8	4668	133.6
14.070	19.170	45.0	3947	114.2	3779	110.8	3546	106.9	3507	106.4	3501	106.2
14.070	19.370	100.0	8772	241.5	8398	233.9	7880	222.5	7793	220.7	7779	220.3
14.070	19.370	80.0	7018	189.9	6718	183.5	6304	176.5	6234	175.4	6223	175.2
14.070	19.270	60.0	5263	144.9	5039	140.6	4728	135.8	4676	135.0	4668	134.8
14.070	19.170	45.0	3947	114.5	3779	110.7	3546	106.9	3507	106.3	3501	106.2
14.070	19.370	60.0	5263	147.2	5039	142.2	4728	137.1	4676	136.2	4668	136.1
14.070	19.370	45.0	3947	117.4	3779	113.7	3546	108.9	3507	108.3	3501	108.2
14.070	19.370	100.0	8772	241.5	8398	233.9	7880	222.5	7793	220.7	7779	220.3
14.070	19.370	80.0	7018	189.9	6718	183.5	6304	176.5	6234	175.4	6223	175.2
14.070	19.270	60.0	5263	144.9	5039	140.6	4728	135.8	4676	135.0	4668	134.8
14.070	19.170	45.0	3947	114.5	3779	110.7	3546	106.9	3507	106.3	3501	106.2
14.070	19.370	60.0	5263	147.2	5039	142.2	4728	137.1	4676	136.2	4668	136.1
14.070	19.370	45.0	3947	117.4	3779	113.7	3546	108.9	3507	108.3	3501	108.2

- Inlet pressure drop 0.20 psid
- All losses incl. mech. oil pump are included.
- For ASME PTC-10 TORQUE METER TEST
  with power tolerance of + 0% /- 4%.

*Option 2

Preliminary

CONFIDENTIAL

Howden

v1.82 40060

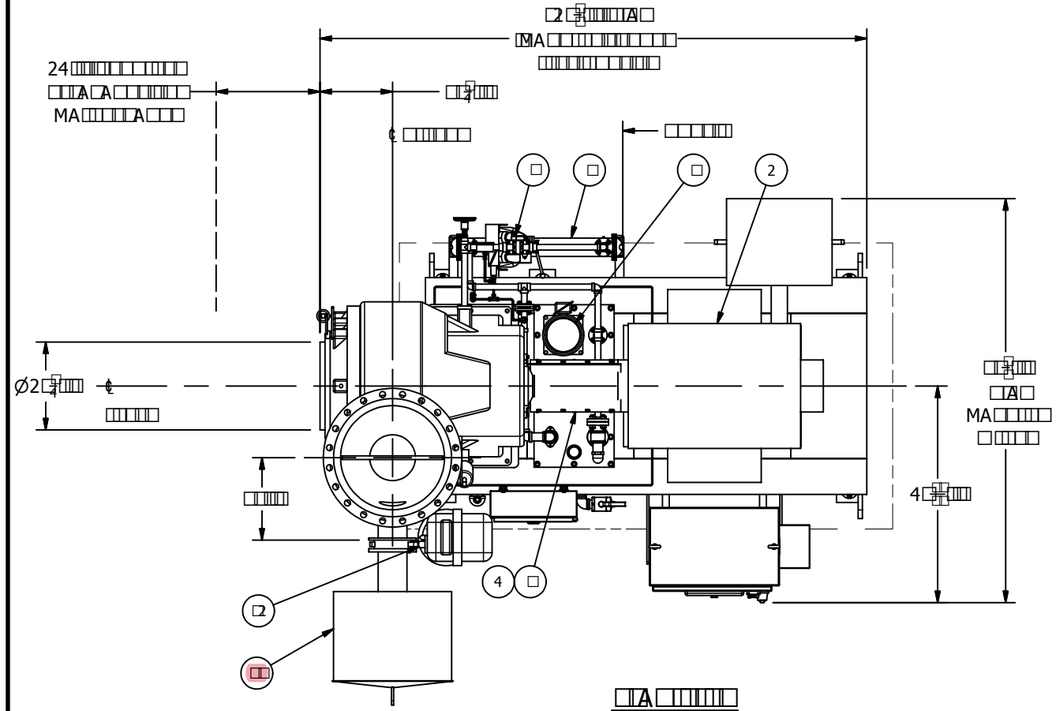

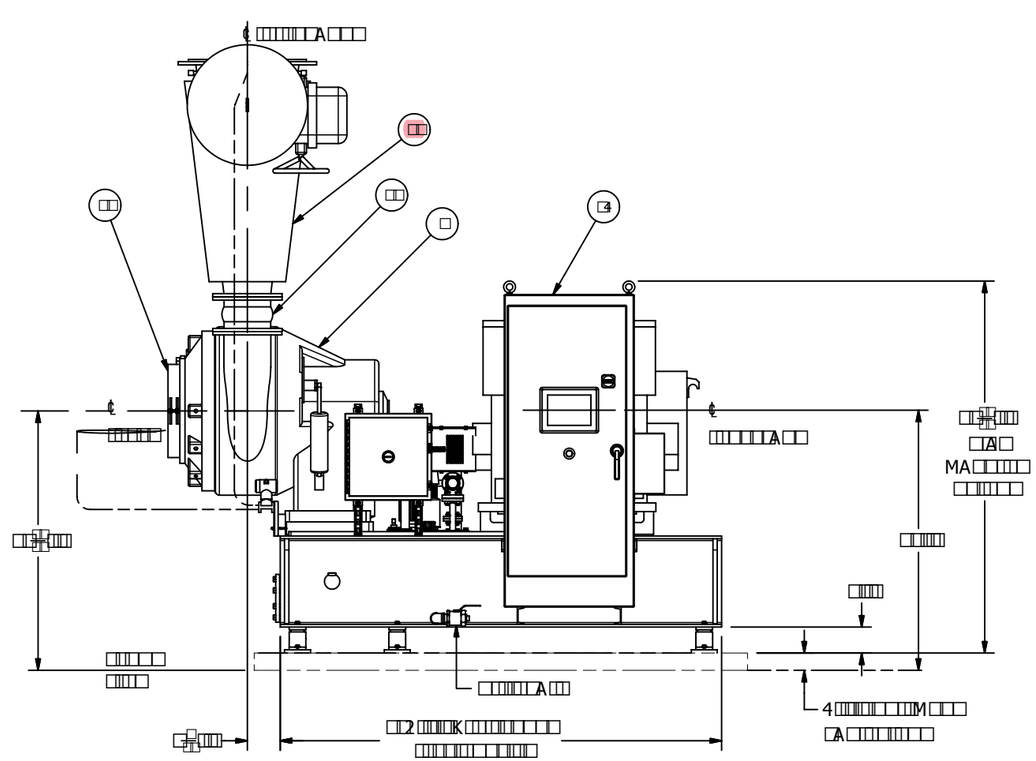

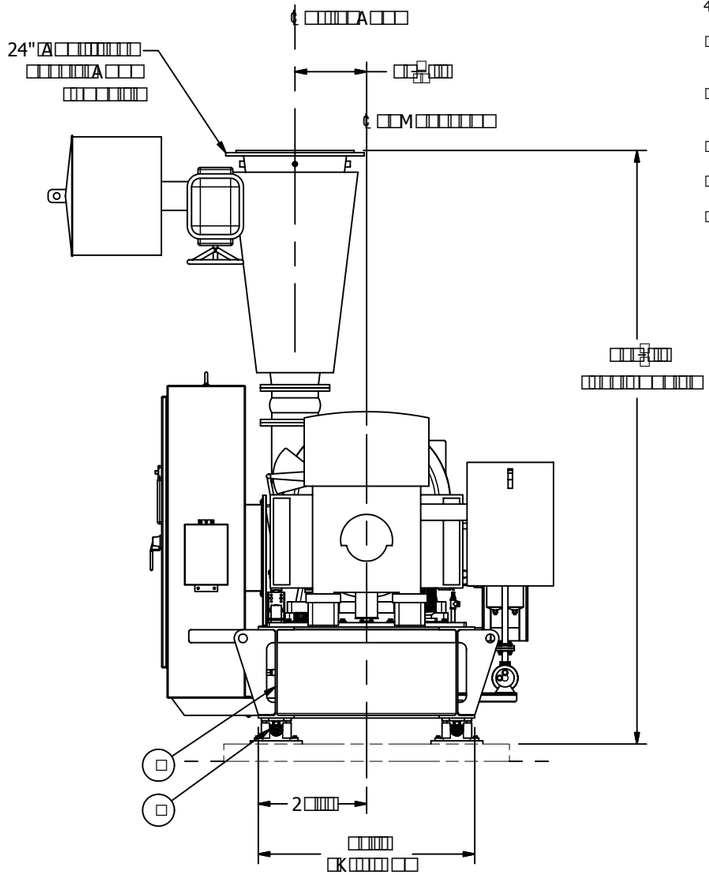

PROPOSAL DRAWING

HOWDEN

B

STANDARD

022L225A

Alternative A Proposal

City of Surprise SPA1 WRF Capacity Expansion WWE Project 20-018

Single Stage Centrifugal Blowers

SUBMITTED BY:

Lone Star Blower
Amber Roberts
Ph: 832-982-8877
aroberts@lonestarblower.com
8883 West Monroe Road
Houston, TX 77061

REPRESENTED BY:

MISCOwater
Dave Redman
Ph: 480-415-7303
dredman@miscowater.com
4670 South Ash Ave, #103
Tempe, AZ 85282

Lone Star Blower, Inc.

October 5, 2022

TABLE OF CONTENTS

SECTION	PROPOSAL DOCUMENTATION
A	**Alternative A - Proposal (Option 1 & 2)**
	1. Pricing Summary 2. Scope of Supply 3. Comments and Clarifications 4. Warranty Statement 5. Terms and Conditions
B	**Alternative A - Technical Data (Option 1 & 2)**
	1. Option 1 a. Blower General Data Sheet b. Blower Performance Data and Curves c. Blower Preliminary Dimensional Drawings 2. Option 2 a. Blower General Data Sheet b. Blower Performance Data and Curves c. Blower Preliminary Dimensional Drawings

TAB A

Alternative A – Proposal (Option 1 & 2)

Includes:
1. Pricing Summary 2. Scope of Supply 3. Comments and Clarifications 4. Warranty Statement 5. Terms and Conditions

Lone Star Blower, Inc.
8883 West Monroe Road
Houston, TX 77061
PH: 832-532-3112
FAX: 832-532-3115

SINGLE STAGE CENTRIFUGAL BLOWER PROPOSAL

Alternative A - Option 1 & 2

PROJECT:	City of Surprise – SPA1 WRF Capacity Expansion		
REPRESENTATIVE:	MISCOwater		
DATE:	October 4, 2022	QUOTE NO.:	ALR630_Alt.A
EQUIPMENT:	Single Stage Centrifugal Air Blowers		

SUPPLIER:	LONE STAR BLOWER
SPECIFICATION:	11629/11371
VALIDITY:	90 Days
SUBMITTAL**:**	8-10 Weeks after acceptance of order.
DELIVERY:	Estimated 32-36 from receipt of submittal approval. Due to supply chain challenges, schedule subject to change and will be confirmed upon submittal approval.

LONE STAR BLOWER

8883 West Monroe Road
Houston, Texas 77061

TEL: 832-532-3112
FAX: 832-532-3115

1. PRICING SUMMARY – ALTERNATIVE A

DESCRIPTION	QTY	Option 1 IGV and VFD	Option 2 IGV and DV
GL Series Blower, Model GL10	4	Included	Included
Blower Accessory Package	4	Included	Included
Blower Instrumentation Package	4	Included	Included
Local Control Panel	4	Included	Included
Reduced Voltage Soft Starter	4	N/A	Included
Variable Frequency Drive (VFD)	4	Included	N/A
Performance Testing	Lot	Included	Included
Packaging & Freight	Lot	Included	Included
Field/Startup Services	Lot	Included	Included
Spare Parts paragraph 2.11	Lot	Included	Included
	Grand Total	$1,356,080	$1,295,770

Optional Adds/Deducts – The following deducts and adds are offered. Applies to both Option 1 and 2.

Add/ Deduct	Spec Reference	Description	Qty	Total for All Units
ADD	2.6.B & C	Provide stainless steel body blow-off silencer and discharge cone in lieu of industry standard carbon steel. For air service applications, carbon steel or ductile iron material for these components are industry standards and meet technical requirements for this application and environmental conditions. Due to supply chain challenges, lead times for stainless steel is very volatile and could impact the delivery schedule.	4	**Blow-off Silencer $14,620** **Discharge Cone $16,960**
DEDUCT	2.8.A	Provide 10” OIT in Lieu of 15” Typical OIT size for the LCPs is 10”. Providing specified size will require a larger overall LCP enclosure and provide minimal increased viewing benefits.	4	**($13,670)**
ADD	2.8.B	Provide MCP as referenced It is unclear if this is by others or to be provided by blower manufacturer. If required, Lone Star Blower can provide as specified.	1	**$29,955**
DEDUCT	2.11.A	**Provide only consumable spare parts (oil filters and oil breathers) in lieu of non-consumables listed (i.e. bearings, seals, actuators, etc.)** All non-consumable parts listed are not parts that require regular maintenance or replacement. LSB stocks full sets of blower spare parts at our Houston, TX factory, and can have parts readily available in the event they are needed on site.	Lot	**($15,475)**

PRICE: The price quoted is for all items purchased at one time. Partial orders may be subject to a price adjustment.

PAYMENT TERMS: 25% upon Approval of Submittals; 70% upon delivery or readiness for shipping; 5% upon successful startup or latest 8 weeks after delivery. Terms subject to credit approval.

WARRANTY: A 24-month warranty will begin upon successful completion of startup and certification for full-scale operation by Lone Star Blower, or 18 months from shipment, whichever occurs first. Under no circumstances will the warranty begin upon “beneficial use”, completion of the project, or acceptance of the equipment as determined by the engineer or end user. Any and all warranty terms and conditions detailed in the proposal herein shall supersede and/or supplement the warranty language denoted in the Lone Star Blower terms and conditions.

TERMS & CONDITIONS: Included is a copy of our standard terms & conditions (see Proposal Tab A.5)

2. SCOPE OF SUPPLY – ALTERNATIVE A

APPLICATION - AERATION	Option 1	Option 2
BLOWER MODEL	GL10	GL10
CONFIGURATION	IGV and VFD	IGV and DV
QTY	Four (4)	Four (4)
DESIGN FLOW	10,533 SCFM	10,533 SCFM
DESIGN PRESSURE	5.5 PSIG	5.5 PSIG
DESIGN TEMPERATURE	100°F	100°F
DESIGN RH%	40%	40%
RISE TO SURGE	> 0.5 PSIG	> 0.5 PSIG
MOTOR RATING, HP	350	350
BLOWER TURNDOWN	Minimum 40% of capacity	Minimum 40% of capacity

BLOWER DESIGN

The GL Series Integrally Geared Turbo Centrifugal blower package utilizes inlet and discharge guide vanes for flow modulation and efficiency optimization. Our blowers are built in compliance with API 672 with tilting pad sleeve bearings for maximum life and reliability. All components of the Lone Star Blower package are made from the highest quality raw materials and all critical components of the blower, including all moving parts (impellers, gears and shafts) are manufactured in the USA with state-of-the-art machines for strict quality control throughout the process. Our blower features include

- 3 to 35 PSI Range
- 1,000 to 70,000 CFM
- 100% to 40% Turndown
- Sleeve Bearing Design
- Oil Free Compression
- High Rise to Surge, Low Maintenance & High Reliability

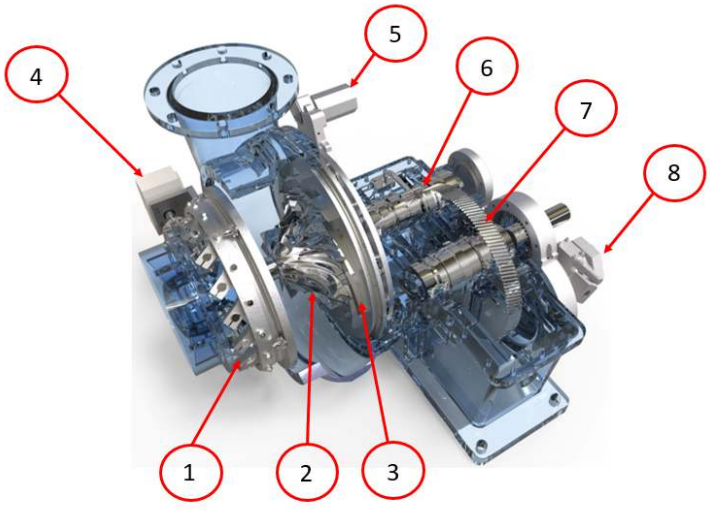

1. Inlet Guide Vanes (IGV) 316 SS
2. High Efficiency Impeller
3. Variable Vane Diffusers (VD) 316 SS
4. IGV Actuator
5. VD Actuator
6. Radial Tilt Pad Sleeve Bearing Design
7. Slow Speed Bull Gear
8. Mechanical Oil Pump

TYPICAL LAYOUT*

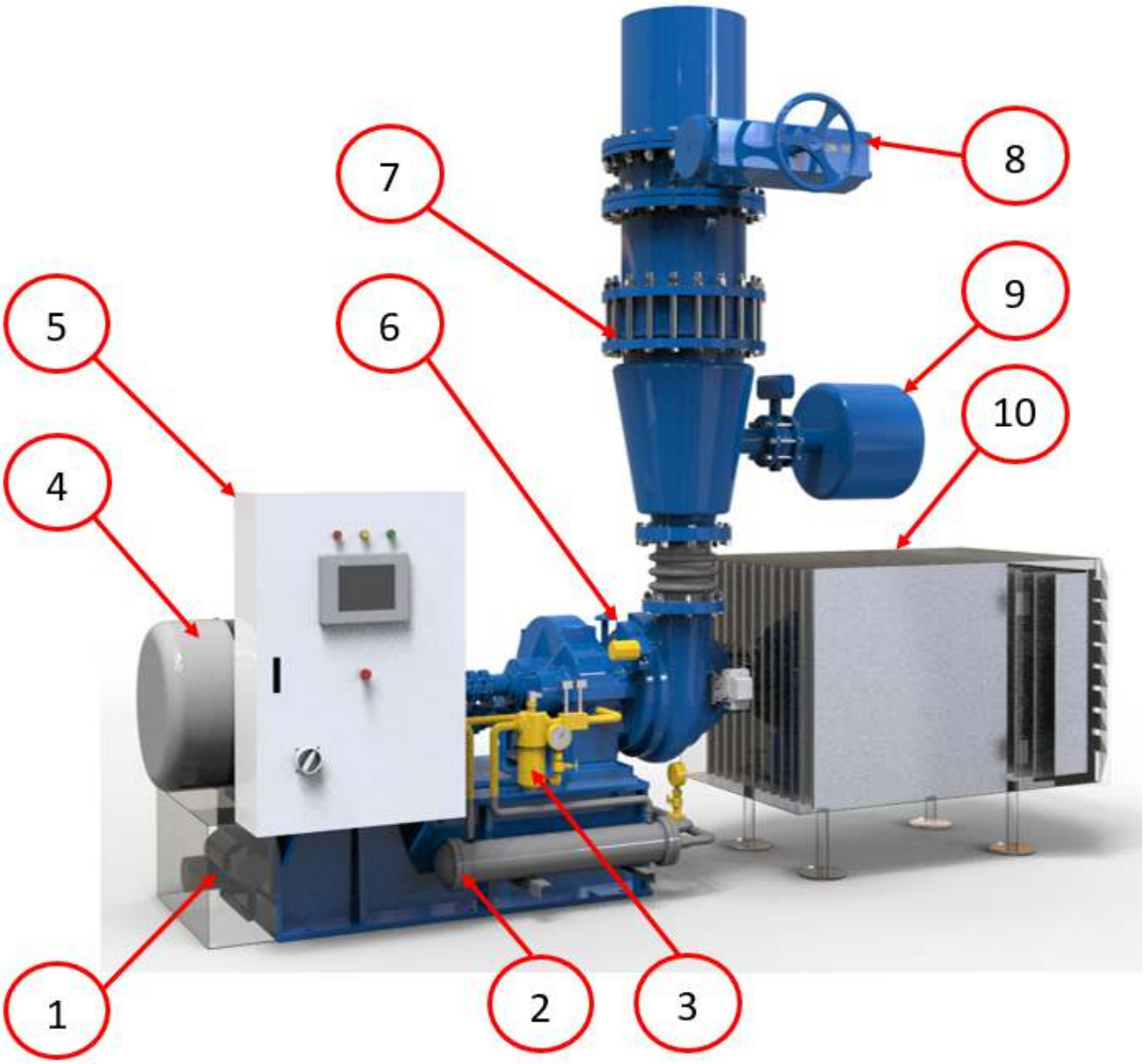

1. Auxiliary Oil Pump
2. Oil Cooler
3. Oil Filter
4. Main Motor
5. LCP
6. Blower
7. Check Valve
8. Isolation Valve
9. Blow Off Valve & Silencer
10. Inlet Filter/Silencer

* Above layout drawing is reference only and does not depict the actual layout for this proposed project. Detailed submittal drawings will be issued upon an order being placed.

Lone Star Geared Turbo Blower, accessories and controls with variable inlet and discharge guide vanes for efficiency optimization and minimized power consumption. This proposal is offered in accordance with Section 11629/11371 and associated Procurement Documents.

Standard Major Skid Components:

Lone Star GL□□ Series Blower Package consisting of:

- Ductile Iron Volute
- Cast Iron Gearbox Casing
- Aluminum Alloy Impeller, **Anodized**
- 316SS Diffuser (as applicable) & Guide Vanes and Diffuser Backplate
- Alloy Steel with White PAP Alloy – Force Lubricated **Journal** Style Bearings
- High Tensile Alloy Steel Gears & Shafts
- Pressurized Oil Lubrication System
    - Oil pumps, Oil filter, water cooler, oil reservoir (integral to blower base) oil heater, temperature regulator and solenoid valve stainless steel piping, and demister
- IP67 IGV & VD Actuators (as applicable)
- NEMA 12 Blower Termination Boxes

Star Premium Structural Steel Skid/Base consisting of:

- Heavy Duty Steel Construction
- Oil Reservoir
- Lifting Eyes on Corners
- Premium Coupling
- OSHA Coupling Guard
- Vibration Isolators (Seismic Rated)

35□ Premium Efficient Motor; DP Enclosure, 460/3/60, 1.15 S.F., 3,600RPM

- 100 ohm Platinum Bearing and Winding RTDs
- Vibration Sensors
- 120V Space Heater, 50°C ambient temperature rating
- Inverter Duty Rated (Option 1)Suitable for Reduced Voltage Solid
- State Start by RVSS (Option 2)
- In accordance with 11629, 2.3

Technical Offer – Blower Accessory Package	
Customer	City of Surprise – SPA1 WRF Capacity Expansion
Date	October 4, 2022

Lone Star Blower offers all required accessories for a complete system.

Inlet Accessories (Shipped Loose; for each blower, for installation by Customer):
Inlet Expansion Joint, EPDM Material

Discharge Accessories (Shipped Loose; for each blower, for installation by Customer):
Discharge Expansion Joint
Discharge Silencing Cone, Carbon Steel
□□", Discharge Check Valve, Cast Iron Body, Wafer Style, w/EPDM Seat
□□", Blow-Off Valve, Wafer Style, Cast Iron Body w/EPDM Seat w/ Electrical Actuator
□□", Discharge Isolation Valve, Cast Iron Body, w/EPDM Seat w/ Electric Actuator
□□", Blow-Off Silencer, Inline Type, Carbon Steel

Technical Offer – Blower Instrumentation Package	
Customer	City of Surprise – SPA1 WRF Capacity Expansion
Date	October 4, 2022

Lone Star Blower offers Premium Instrumentation to protect your new equipment. It is recommended to monitor and protect your centrifugal blower with temperature, pressure and vibration protection. By monitoring your equipment, you can conduct preventative maintenance by trending vibration and temperature levels of your blower bearings. Instrumentation communicates via 4-20 mA to easily monitor with DCS, SCADA□M□□□or Local Control panel.

Blower Instrumentation (skid mounted & pre-wired to the LCP)

Motor bearing & winding RTD's
Oil temperature gauge
Inlet temperature gauge
Oil pressure transmitter
Blower bearing RTDs
Surge switch
Oil reservoir temperature transmitter
Oil pressure switch
Oil filter differential pressure indicator gauge
Discharge Temperature Transmitter
Inlet air temperature transmitter
Blower & motor vibration monitors
Reverse rotation switch
Differential pressure transmitter
Oil pressure gauge

Technical Offer – Local Control Panel	
Customer	City of Surprise – SPA1 WRF Capacity Expansion
Date	October 4, 2022

Lone Star Blower offers a complete line of advanced sLOC-GL smart local control panels (LCPs) to suit every application, process & environment. These smart panels in conjunction with our system monitoring package will protect and extend the life of the blower by operating the equipment at peak efficiencies and alarming and then shutting down the blower if an unsafe operating condition exist. Each blower includes the following control panel:

sLOC-GL:

NEMA 12 Skid Mounted PLC based Local Control Panel (LCP), includes the following minimum features:

- Allen Bradley CompactLogix PLC
- **15”** Operator Interface Terminal (OIT), Allen Bradley PanelView
- Certified per UL 508A
  120V/60Hz/1ph, 30 Amp power supply (480V power supply available, if required)
- Emergency Stop Button

Protection/Control and monitoring for the following are included:

- Blower operating status (Start/Stop)
- Local control
- Remote/Auto control
- Blower failure/shutdown alarm
- Blow-off valve control (open/close)
- Discharge Valve control (open/close)
- Inlet guide vanes position and control
- Motor Speed via VFD (Option 1)
- Variable diffuser vanes position and control (Option 2)
- Oil low pressure alarm
- Oil high temperature alarm
- Surge control alarm
- Inlet air temperature alarm
- Inlet air filter high differential pressure alarm
- High vibration indicator
- Motor Amps
- General alarm indicator
- Global alarm reset
- Service/Normal/Test Models

Not all monitoring and control functions shown

Technical Offer – Drives	
Customer	City of Surprise – SPA1 WRF Capacity Expansion
Date	October 4, 2022

Lone Star Blower provides a full line of VFD's and Starter Panels for starting and speed control:

Option 1 includes:
Variable Frequency Driver (Shipped Loose; for each blower, installation by Customer):
35□HP, High efficiency, 6-pulse Drive, Standalone NEMA Enclosure, Positive Pressure Blown & Filtered including:

- 480VAC
- Rotary Disconnect w/Fuses
- Input Reactor
- E-Stop, Power light, Running Light
- Drive Mounted LCD Keypad
- EtherNet

Option 2, includes
RVSS Soft Starter (Shipped Loose; for each blower, for installation by Customer):
350 HP, Standalone NEMA Enclosure, including:

- Circuit Breaker Disconnect w/Through-the-door Operator
- 480V-120V Fused Control Transformer
- Soft Starter with Built-in Bypass Contactor and Overload Relay
- Start/Stop Pushbuttons
- Red Run Light
- Amber Fault Light

Technical Offer – Product Data	
Customer	City of Surprise – SPA1 WRF Capacity Expansion
Date	October 4, 2022

Lone Star Blower has a fully trained and experienced Project Management and Engineering Team. Upon notification of selection, a dedicated Project Team will be assigned and provide the following support services and product data as specified.

- Seismic Calculations and Drawings, stamped by Registered Arizona PE, as required
- Submittal and O&M Documentation and Engineering Support Throughout Project Execution and Warranty
- Coordination Meeting

Technical Offer – Testing	
Customer	City of Surprise – SPA1 WRF Capacity Expansion
Date	October 4, 2022

Lone Star Blower performs mechanical testing under full load for all new blowers. The standard mechanical test includes balance report and vibration analysis. In addition to mechanical testing, the following tests are included:

- Blower ASME PTC10 Performance Test
- LCP FAT Test
- Motor Routine test

Technical Offer – Packaging & Freight	
Customer	City of Surprise – SPA1 WRF Capacity Expansion
Date	October 4, 2022

Lone Star Blower ships from our Houston, Texas, USA factory. Packaging, Handling and Freight DAP jobsite (INCOTERM® 2010) is included. Equipment will be shrink wrapped & labeled.

Technical Offer – Field/Startup Services	
Customer	City of Surprise – SPA1 WRF Capacity Expansion
Date	October 4, 2022

Lone Star Blower has a fully trained and experienced US based service group which will perform installation checking, functional testing, equipment commissioning and training. Includes the following onsite services in accordance with 11629, 3.4 & 3.5:

- Twenty (20), 8-hr days onsite services (minimum of four (4) trips) to provide
  - Installation Support/Inspection
  - Commissioning and Initial Operation Support
  - Operation and Maintenance Training
  - System Operation Demonstration

Additional service is available per Lone Star's published labor rate sheet. Advance notification of 15 working days is required for scheduling.

Technical Offer – Spare Parts	
Customer	City of Surprise – SPA1 WRF Capacity Expansion
Date	October 4, 2022

Lone Star Blower stocks parts locally in our Houston, TX Factory. The following spare parts are included:

- One (1) complete set of bearings for the blowers
- One (1) sets of all gaskets and seals for blowers
- One (1) inlet guide vane actuator
- One (1) variable diffuser vane actuator (Option 2)
- Four (4) sets oil filter cartridges (one per blower)
- Four (4) sets oil breather cartridges (one per blower)
- Four (4) complete set of motor bearings (one per motor)
- Four (4) set of all motor gaskets and seals (one per motor)
- Four (4) spare flexible coupling for electric drive and blower
- Two (2) sets of special tools

3. COMMENTS AND CLARIFICATIONS

1. **ITEMS NOT INCLUDED:** Inlet filter/silencer, MCP, Fittings, Piping Hardware, Elbows, Existing Equipment Removal and Loading, Equipment Installation, Equipment Wiring, Taxes and anything not listed in the above scope of supply shall be provided by others.

2. 11629/11371-7, 2.2.F.7 - Proposal includes a water cooled oil system as shown on drawing N-40-101 & 2. If air cooled system is preferred, it can be provided in lieu of water cooled system for no additional costs.

3. 11629/11371-13, B.1.e and C – Carbon steel bodies for these components are included. For air service applications, carbon steel or ductile iron material for these components are industry standards and meet technical requirements for this application and environmental conditions. In addition, due to supply chain challenges, lead times for stainless steel has been very volatile, and could impact delivery schedule. See pricing summary of this proposal for add to provide stainless steel construction.

4. 11629/11371-15, 2.8.A.7 - Typical OIT size for the LCPs is 10". Providing specified 15" size will require a larger overall LCP enclosure and provide minimal increased viewing benefits. See pricing summary of this proposal for deduct to provide 10" OIT in lieu of 15".

5. 11629/11371-18, 2.8.B - It is unclear if the referenced MCP is a common Plant MCP that is being provided by others or a stand-alone blower MCP that is to be provided by blower manufacturer. Our proposal does not include a MCP. If required, Lone Star Blower can provide this item, see pricing summary of this proposal for adder.

6. 11629/11371-19, 2.11 - All non-consumable parts listed (blower bearings & seals, guide vane actuators, motor couplings) are not parts that require regular maintenance or replacement. LSB stocks full sets of blower spare parts at our Houston, TX factory, and can have parts readily available in the event they are needed on site. See pricing summary of this proposal for deduct to provide only consumable parts.

7. DWG. M-40-201 – Inlet filter/silencers are not included in this offer. Based on drawings included with RFP, it is inferred that these are part of the inlet plenum and provided by others. Please contact LSB if an adder for the inlet filer/silencer is needed.

8. 11629/11371-10, 2.3 – For Option 1 a standalone VFD panel has been included for each blower for control and starting. For Option 2 a standalone RVSS panel is included for each blower for reduced voltage starting. If these components are to be provided by others or mounted in a common MCC, please advise, and deduct options will be provided.

9. 11629/11371 & 16269 – For Option 1, a Contactor Bypass has not been included with the VFD as it is not applicable nor recommended for use with the proposed blowers.

Office: + 832 532 3112
Fax: + 832 532 3115
www.lonestarblower.com

□□□ ARRANT□ STATEMENT

The following is a summary of the warranties included in our offer and those offered above those specified.

Blower Complete Package Two (2)-Year Warranty: LONE STAR BLOWER (LSB) is including a complete **Two (2)-year** warranty on the proposed blower (GL-Series) packages from start-up or 30 months from delivery, whichever occurs first. LSB warrants the GL-Series Geared Turbo product supplied to be free from defects in material and/or workmanship under normal use and service. LSB warrants that all equipment, materials, and work will conform with the specifications, will be new, current and sufficient for application and operating conditions specified.

This warranty applies to all standard equipment supplied by the Lone Star Blower. Lone Star Blower will repair or replace any defective part or parts, at no charge.

Warranties Above Those Specified, Included in Offer

In addition to the Two (2)-year complete package warranty above, LSB is including a **Ten (10)-year** blower core warranty, as detailed below:

> **Blower Core Ten (10)-Year Warranty:** A **Ten (10)-year** warranty will begin upon commissioning of the equipment or 60 days from shipment, whichever occurs first, for the blower core component. Warranty is based on normal operating conditions, environmental conditions specified and following of recommended O&M procedures.

Office: + 832 532 3112
Fax: + 832 532 3115
www.lonestarblower.com

Lone Star Blower, Inc

TERMS & CONDITIONS OF SALE (EQUIPMENT AND/OR SERVICE)

1. GENERAL: As used herein, "Seller" means Lone Star Blower "Purchaser" means the entity to which Seller's offer is made, or the entity purchasing Equipment and/or service from Seller. The term "Equipment" as used herein includes any and all products, equipment, parts, and accessories furnished by Seller to Purchaser. All offers and sales by Seller are expressly conditional upon these Terms and Conditions of Sale. Any terms or conditions in Purchaser's purchase order (or in any other Purchaser communication) which are different from or in addition to the terms and conditions contained in these Terms and Conditions of Sale are hereby objected to. All orders submitted to Seller are subject to approval by Seller's headquarters.

2. DELIVERY: The shipment/delivery period is an estimate only and commences after Seller's receipt of all necessary information, approvals, and signed submittals with release for manufacturing. In no event shall delivery be construed as falling within the meaning of "time is of the essence". Seller reserves the right to deliver in installments. Unless otherwise specified in Seller's quotation, delivery is F.O.B. Seller's manufacturing facility.

3. TITLE and RISK OF LOSS: Unless otherwise specified in Seller's written quotation, title and risk of loss or damage to the Equipment shall pass to Purchaser upon tender of delivery F.O.B. manufacturing facility. Notwithstanding the foregoing, a security interest in the Equipment or any replacement shall remain in Seller, regardless of mode of attachment to realty or other property, until full payment has been received by Seller. Purchaser agrees upon request to do all things and acts necessary to perfect and maintain said security interest and shall protect Seller's interest by adequately insuring the Equipment against loss or damage from any cause.

4. TAXES: Purchaser shall be responsible for applicable local, state and federal taxes which may be now or hereafter be applicable to, measured by, or imposed upon, or with respect to this transaction, the Equipment, its sale, its value or its use, or any services performed in connection therewith (except any taxes on Seller's income). If sales, use or other State or Municipal taxes in addition to any listed specifically as part of the stated purchase price, are imposed upon Seller, Purchaser agrees to pay the same or reimburse Seller upon demand. Seller will accept a valid exemption certificate from Purchaser, if applicable. If an exemption certificate previously accepted by Seller is not recognized by the governmental taxing authority involved, Purchaser agrees to promptly reimburse Seller for any taxes covered by such exemption certificate which Seller is required to pay.

5. PAYMENT: Unless specifically agreed otherwise in writing, payment is due in full within 30 days of the invoice date. Seller reserves the right to charge late fees on overdue amounts at a monthly rate of 1.5% (one and a half percent) or the rate permitted by law, whichever is lower. Purchaser shall have no right to set-off against any amounts which may become payable to Seller under this contract or otherwise, for amounts which Seller may allegedly or in fact owe Purchaser or any affiliate of Purchaser or assignee whether arising under this contract or otherwise. Any waiver by Seller of any lien or lien right shall be conditioned upon Purchaser's timely payment to Seller of all amounts due.

6. INSTALLATION: Unless Seller's written quotation specifies that Seller will perform installation of the Equipment, it is understood and agreed that Seller will not perform any installation of the Equipment.

7. START-UP, OTHER SERVICE: Any service (for example, Equipment start-up, if applicable) to be performed by Seller is specified in Seller's written quotation. Dates/time for the service is subject to scheduling and confirmation by Seller's service department. Seller's performance of service is subject to Seller's normal working hours (8:30 am to 5:00 pm, Monday through Friday excluding public holidays), unless expressly agreed otherwise. If any forklift, crane, and/or other lifting or rigging equipment or lighting equipment is necessary (as reasonably determined by Seller's service technician) for Seller to perform the service, Purchaser shall supply such equipment at its own expense together with sufficiently skilled and qualified labor in connection therewith, unless expressly agreed otherwise. If Purchaser requests Seller to comply with Purchaser's safety programs/procedures in connection with performing service at Purchaser's premises, Seller shall comply with such safety programs/procedures that have been provided in advance to Seller in writing with reasonable opportunity to review/implement, to the extent they are reasonable and applicable to the scope of Seller's activities at the premises.

8. INSURANCE: During the term of the Contract, Seller agrees to have the following insurance coverage:
a) Commercial General Liability insurance in an amount of $1,000,000 each occurrence for bodily injury and physical damage to tangible property, subject to an annual aggregate not to exceed $2,000,000;
b) Automobile Liability insurance in an amount of $1,000,000 combined single limit each occurrence;
c) Worker's Compensation insurance in accordance with applicable statutory law; and
d) Employer's Liability insurance in an amount of $1,000,000 for bodily injury each accident or disease.
If Seller will physically enter onto Purchaser's premises (or a third party's premises) in connection with the sale of the Equipment/ service, Seller agrees to, at Purchaser's reasonable request, provide an ACORD form of certificate confirming the above-stated insurance coverage.
Seller shall have no other insurance-related requirement, unless specifically agreed to in writing by an authorized manager of Seller in connection with the order.

9. RETURN POLICY: Shipping and handling charges are not refundable. Purchaser is responsible for the return shipping fee. All returned items are subject to a 30% restocking fee. Returned items must be in brand new condition with all packaging enclosed in the exact condition in which you received them. Special order or non-stock items will not be accepted for return/refund.

10. CANCELLATION: Each party has the right to cancel the order/contract in whole or in part in writing with immediate effect if the other party becomes insolvent, makes a general assignment for the benefit of creditors, suffers or permits the appointment of a receiver for its business or assets, becomes subject to any proceeding under any bankruptcy or insolvency law, or has wound up or liquidated (voluntarily or otherwise). In addition, each party has the right to cancel the order/contract or any part thereof if the other party fails, within 30 days after receipt of written notice from the non-breaching party specifying the material breach and intent to terminate, to commence and diligently pursue cure of the breach. Unless an order is cancelled by Purchaser in accordance with this paragraph, Purchaser shall pay Seller's cancellation charges if Purchaser cancels the order (including if Purchaser cancels the order for Purchaser's convenience). The cancellation charges shall be reasonable and may include (among other things) all costs and expenses incurred, and commitments made by Seller and a reasonable profit thereon. Notwithstanding anything set forth to the contrary, Seller may suspend Seller's performance or cancel the order/contract (or any part thereof) immediately if Purchaser fails to provide payment security (if applicable) or if Purchaser fails to make any payments when due.

11. WARRANTY: Seller hereby warrants to Purchaser that the Equipment manufactured or distributed by it and delivered hereunder will be free from defects in material and workmanship under proper use and service; this warranty shall expire one year from start-up or 18 months from the original shipment date from Seller's manufacturing facility whichever comes first. This warranty applies only to Equipment manufactured by Seller and does not cover motors, starters, electrical equipment or other components or accessories manufactured by others. Seller will repair or replace, F.O.B. its factory, any defective part or parts, at no charge, if promptly returned to it within the above-noted warranty period. This warranty extends only to the original purchaser of Equipment furnished hereunder and shall be void if the Equipment is repaired or tampered with in any manner other than by Seller's authorized service personnel. If Seller's inspection does not disclose a defect covered by the warranty, the Equipment will be returned to Purchaser at its expense or, if Purchaser elects, Seller will repair or replace the equipment and charge for such service at the regular rate.

Seller hereby warrants to Purchaser that all other Equipment manufactured by Seller and delivered hereunder will be free from defects in material and workmanship under proper use and service; this warranty shall expire one year from the original shipment date from Seller's manufacturing facility. This warranty applies only to Equipment manufactured by Seller and does not cover components or accessories outside of standard packaged equipment offered. Seller will repair or replace, F.O.B. its factory, any defective part or parts, at no charge, if promptly returned to it within the warranty period. This warranty extends only to the original purchaser of Equipment furnished hereunder and shall be void if the product is repaired or tampered with in any manner other than by Seller's authorized service personnel. If Seller's inspection does not disclose a defect covered by the warranty, the Equipment will be returned to Purchaser at its expense or, if Purchaser elects, Seller will repair or replace the Equipment and charge for such service at the regular rate.

Seller warrants to Purchaser that Equipment or parts thereof repaired or replaced pursuant to the above warranty under proper use and service against defects in workmanship and material; this warranty shall expire 60 days from date of start-up of such repaired or replaced Equipment or parts thereof or on the expiration of the original Equipment warranty, whichever is later.

If the nature of the defect is such that it is appropriate in the judgment of Seller to do so, repairs shall be made at the site of the Equipment. Seller warrants to Purchaser that any services performed by Seller in connection with startup or other servicing of Equipment shall be performed in a workmanlike manner; this warranty shall expire 60 days after the service date visit. If any nonconformity with this warranty appears, Seller shall re-perform the non-conforming portion of the services in a conforming manner.

Any warranties granted beyond those stated above must be specifically identified as a warranty in Seller's specific quotation. Correction by Seller of nonconformities (i.e. repair or replacement of Equipment that is defective in material or workmanship, and re-performance of service which was not performed in a workmanlike manner) in the manner and warranty period provided above shall be Purchaser's exclusive remedy (and Seller's exclusive obligation) with respect to nonconforming Equipment and/or services.

In the event Purchaser and Seller agree that Seller will sell any used Equipment to Purchaser, such used Equipment is sold AS-IS, WITH ALL FAULTS, AND WITHOUT WARRANTY OF ANY KIND.

THE ABOVE-STATED WARRANTIES ARE EXCLUSIVE AND IN LIEU OF ALL OTHER WARRANTIES, WHETHER WRITTEN, ORAL, IMPLIED, OR OTHERWISE. SELLER HEREBY EXPRESSLY DISCLAIMS ANY IMPLIED WARRANTIES OF MERCHANTABILITY AND FITNESS FOR ANY PARTICULAR PURPOSE.

12. CONFIDENTIALITY: In connection with the order and/or performance under this contract, Seller and Buyer (as to information disclosed, the "Disclosing Party") may each disclose Confidential Information to the other party hereto (the "Receiving Party"). " Confidential Information" shall mean all information related to the business or products (including but not limited to the Equipment) or services of the Disclosing Party that is not generally known to the public, and all pricing and terms of this contract, provided that the obligations of this paragraph shall not apply as to any portion of the Confidential Information which: (i) is or becomes generally available to the public other than as a result of disclosure by the Receiving Party, its representatives or its affiliates, or (ii) has been or is subsequently independently developed by the Receiving Party, its representatives or affiliates, without reference to the Confidential Information, or (iii) is required to be disclosed by law or valid legal process provided that the Receiving Party who intends to make such disclosure shall promptly notify the Disclosing Party in advance of such disclosure and reasonably cooperate in attempts to maintain the confidentiality of the Confidential Information. The Receiving Party agrees, except as otherwise required by law: (i) to use the Confidential Information only as the Disclosing Party intended it to be used by the Receiving Party in connection with providing or receiving the Equipment/service under this contract, and (ii) to take reasonable measures to prevent disclosure of the Confidential Information, except disclosure to its employees to the extent necessary to facilitate providing or receiving Equipment/services as contemplated under this contract. Upon the Disclosing Party's request, the Receiving Party shall destroy or return to Disclosing Party all copies of Confidential Information. If either party or any of their respective affiliates or representatives is required or requested by subpoena, interrogatories, or similar legal process
to disclose any Confidential Information, such party agrees to provide the Disclosing Party with prompt written notice of such request, so that the Disclosing Party may seek an appropriate protective order or waive compliance by the Receiving Party with the provisions herein. It is understood and agreed that this paragraph survives any expiration/termination of this contract.

13. INTELLECTUAL PROPERTY: No patents, copyrights, trademarks, trade secrets, or other intellectual property rights are being sold, granted, transferred, or assigned to Purchaser. Without limiting the generality of the foregoing, Seller retains all right, title and interest in and to all inventions, discoveries, ideas, works of authorship (including but not limited to all drawings), processes, methods, know-how, and techniques developed, discovered or conceived by Seller or its employees, including without limitation those developed and/or used in connection with the manufacture of Equipment or performing services hereunder. Such rights include, but are not limited to, patent rights, copyrights, trade secret rights, trademark rights, mask work rights and other proprietary rights throughout the world. Purchaser acknowledges and understands that no drawings, designs, specifications, or anything else provided by Seller shall be deemed to be "work made for hire."

14. PATENT INDEMNITY: Seller shall defend any suit or proceeding brought against Purchaser and shall pay any adverse judgment entered therein so far as such suit or proceeding is based upon a claim that the use of the Equipment or any part thereof manufactured by Seller, and furnished under this contract constitutes infringement of any patent of the United States of America, provided Seller is promptly notified in writing and given authority, information and assistance for defense of same, and Seller shall, at its option, procure for Purchaser the right to continue to use said Equipment, or modify it so that it becomes non-infringing, or replace the same with non-infringing equipment, or remove said Equipment and to refund the purchase price (less a reasonable amount for the time the Equipment was used). The foregoing shall not be construed to include any agreement by Seller to accept any liability whatsoever in respect to patents for inventions including more that the Equipment furnished hereunder, or in respect of patents for methods and processes to be carried out with the aid of said Equipment, except those which are inherent in the Equipment as furnished. The foregoing states the entire liability of Seller with regard to patent infringement. If any Equipment shall be sold by Seller to meet Purchaser's specifications or requirements and is not a part of Seller's standard line offered by it to the trade generally in the usual course of Seller's business, Purchaser agrees to defend, protect, and indemnify and save harmless Seller from any loss, damage, or injury arising out of a claim, suit or action at law or equity for actual or alleged infringement of any patent of the United States or foreign country because of the sale of such Equipment, and to defend any suits or actions which may be brought against Seller.

15. SOFTWARE: In the event any Equipment includes software in any form, such software is not sold to Purchaser but is only licensed on a limited, non-exclusive basis. Subject to Purchaser's compliance with these terms and conditions of sale, Seller grants to Purchaser for the useful life of such Equipment a royalty-free, non-exclusive, non-transferable license to use the software as intended by Seller solely for normal use of the Equipment. Purchaser shall not create derivative works based on the software, or reverse engineer, or disassemble or decompile the software, or transfer, copy, modify, or otherwise change the software.

16. EXPORT CONTROL: Equipment, technical data, technology, software, and services furnished by Seller to Purchaser shall at all times be subject to any and all applicable export control laws and regulations, including but not limited to applicable U.S. Export Administration Regulations, United Nations resolutions and European Union directives relating to trade embargoes and restrictions. Purchaser agrees and warrants that no Product, services, technical data, technology, software or other technical information or assistance or other item furnished by Seller, or any good or product resulting therefrom, shall be exported or re-exported by Purchaser or its authorized transferees, if any, directly or indirectly, in violation of any law or regulation.

Any export and/or re-export must be in strict accordance with applicable U.S. export laws and regulations, as well as United Nations resolutions and European Union directives relating to trade embargoes and restrictions. Violation of this paragraph constitutes a material and non-curable breach and entitles Seller to terminate the order immediately (even after shipment of the Equipment).

17. FORCE MAJEURE: If either party is delayed at any time by any Force Majeure, such party shall have such additional time within which to perform its obligations as may reasonably be necessary under the circumstances. "Force Majeure" means circumstances beyond the delayed party's reasonable control, including but not limited to, acts of God, acts of public enemies, wars, delays by Seller's suppliers, blockades, insurrections, riots, epidemics, quarantine restrictions, floods, lightning, fire, storms, earthquakes, and civil disturbances.

18. LIMITATION OF LIABILITY:
IN NO EVENT SHALL SELLER BE LIABLE FOR SPECIAL, INDIRECT, INCIDENTAL OR CONSEQUENTIAL DAMAGES (INCLUDING BUT NOT LIMITED TO LOSS OF PROFITS OR REVENUE, LOSS OF TOTAL OR PARTIAL USE OF THE EQUIPMENT OR SERVICES, DOWNTIME COSTS, AND DELAY COST) HOWSOEVER ARISING, WHETHER ON ACCOUNT OF EQUIPMENT OR SERVICES FURNISHED HEREUNDER, DELAYS OR OTHERWISE (WHETHER A CLAIM IS BASED ON WARRANTY, STRICT LIABILITY, CONTRACT, TORT, NEGLIGENCE OR OTHERWISE).

SELLER'S TOTAL LIABILITY FOR ALL CLAIMS OF ANY KIND (WHETHER BASED ON WARRANTY, STRICT LIABILITY, CONTRACT, TORT, NEGLIGENCE OR OTHERWISE) FOR ANY LOSS OR DAMAGE ARISING OUT OF, CONNECTED WITH, OR RESULTING FROM THIS CONTRACT OR THE PERFORMANCE OR BREACH THEREOF, OR FROM THE DESIGN, MANUFACTURE, SALE, DELIVERY, RESALE, REPAIR, REPLACEMENT, INSTALLATION, TECHNICAL DIRECTION OF INSTALLATION, INSPECTION, SERVICING, OPERATION OR USE OF ANY EQUIPMENT COVERED BY OR FURNISHED UNDER THIS CONTRACT SHALL BE LIMITED TO 100% OF THE PURCHASE PRICE AMOUNT PAID BY PURCHASER TO SELLER UNDER THIS CONTRACT FOR THE SPECIFIC EQUIPMENT OR SERVICE WHICH GIVES RISE TO THE CLAIM. ALL CAUSES OF ACTION AGAINST SELLER ARISING OUT OF OR RELATING TO THIS CONTRACT OR THE PERFORMANCE HEREOF SHALL EXPIRE UNLESS BROUGHT WITHIN ON YEAR OF TIME OF ACCRUAL THEREOF.

19. MISCELLANEOUS:
19.1 If for any reason, Seller's quotation (or any other document or act by Seller) is deemed an acceptance of an offer from Purchaser, such acceptance is expressly conditional upon Purchaser's assent to any additional or different terms or conditions set forth in these Terms and Conditions of Sale.

19.2 No modification or additional term or condition shall be applicable to this contract by virtue of Seller's receipt, acknowledgment or acceptance of Purchaser's purchase order, shipping instruction forms, or other Purchaser documentation containing terms or conditions which are different from or in addition to those set forth in these Terms and Conditions of Sale. Any such modifications or additional terms or conditions are specifically rejected and deemed a material alteration hereof. Purchaser's issuance of a purchase order or Purchaser's acceptance of any drawings, Equipment, or services from Seller shall (without prejudice to any other manner in which acceptance of these Terms and Conditions of Sale may be evidenced) constitute full acceptance of these Terms and Conditions of Sale.

19.3. Neither party shall assign or transfer this contract without the prior written consent of the other party (which consent shall not be unreasonably withheld); any purported assignment in violation of this sentence shall be void. Irrespective of the foregoing, Seller may without consent assign this contract (or any of rights or obligations hereunder) to any of its affiliates and use sub-contractors.

19.4. If any part of this document is held by a court of competent jurisdiction to be invalid or unenforceable for any reason, such invalidity or enforceability does not affect any other provision, and this document shall be construed as if the invalid or unenforceable provision had never been set forth.

19.5. Neither party's failure to enforce, or its waiver of a breach of, any provision contained in this document shall constitute a waiver of any other breach or of such provision.

19.6. The validity, performance, and all other matters relating to the interpretation and effect of this contract shall be governed by the laws of the State of Texas, USA, without regard to its conflict of laws principles, and the exclusive forum shall be the State of Texas. The United Nations Convention on the International Sale of Goods shall not apply.

19.7 These Terms and Conditions of Sale cannot be superseded, amended, or modified except by a written document signed in handwriting by
Seller's duly authorized officer and Buyer's duly authorized representative.

19.8. All headings, captions and numbering in these Terms and Conditions of Sale are for convenience of reference only and shall notbe used to interpret any meaning of any terms or condition.

19.9. Seller and Purchaser are independent contractors; neither party shall act as the agent for the other. This contract is between Seller and
Purchaser alone, and there are no intended rights or benefits provided hereunder to any third party.

TAB B

Alternative A – Technical Data (Option 1 & 2)

Includes:
1. Option 1 a. Blower General Data Sheet b. Blower Performance Data and Curves c. Blower Preliminary Dimensional Drawings 2. Option 2 a. Blower General Data Sheet b. Blower Performance Data and Curves c. Blower Preliminary Dimensional Drawings

OPTION 1

GL-10

Integrally Geared Single Stage Blower

Model GL-10

Standard Specifications

Gas	Air, Steam, H2S, Biogas, Fuel Gas, CO2, N2, LNG, Custom
Flow Range	100% to 35% of Rated Flow with Combination Control
Pressure Range	Up to 30 PSIG / 2 bar
Maximum Case Pressure	50 PSIG / 3.5 bar
Stages	Single Stage
Drive Type	Direct Coupled
Power Driver Options	Electric Motor, Steam Turbine, Combustion Engine
Gearbox	Helical Gear Set
Cooling Lubricant	Lubricant Cooling (Air or Liquid)
Lubrication Options	Pressurized Oil
Bearings	Pinion - Tilt Pad Journal, Drive Journal
Enclosure	Optional
Sound Level	Job Specific
Sound Level with Enclosure	Job Specific
Filtration Rating (std)	99% at 2 micron, or as required
Seals Air	Labyrinth Type

Service

Air, Gas, Pressure, Vacuum

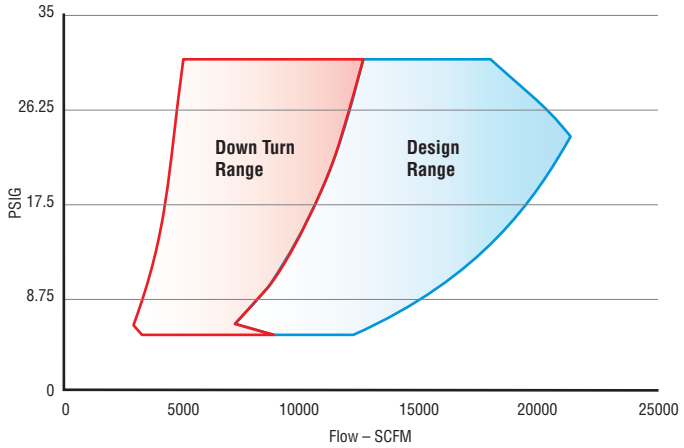

Standard Materials of Construction

Casing	Grey Iron GG25, Ductile, ASTM A536, A48 or Equal
Bearings	ANSI 5140 Steel, Babbited, 40CR Alloy Casing
Impeller	AlCu2MgNi Alloy (annodized), 17-4PH, Titanium, Inconel
Inlet Guide Vanes	Stainless Steel 316
Discharge Diffuser Vanes	Stainless Steel 316
Gears	AISI 8620, Steel 10CrNiMo to AGMA 12/13
Shaft	Steel 10CrNiMo
Seals Air	ASTM B86 Z25631 Zinc Alloy Aluminum
Seals Gas	ASTM C695 Molded Graphite
Blower Base Skid	ASTM A36 Structural Steel
Isolation Pads	St. SIS 1312 inertial dampening with rubber hardness 60
Finish	2 Part Epoxy Lone Star Blue RAL5005
Enclosure	Aluminum, Galvanized Steel, Stainless

Control Options

Control Methods	Variable Inlet and Discharge Guide Vane, speed control, blow off, or combination
Local Controller	sLOC™ Standard - Custom for Allen Bradley, Modicon, Siemens or Other
HMI	sLOC™ Standard or Custom HMI
Remote Monitoring	sLINK™ or Custom
Control Set Points	Pressure, Flow, Power, Custom Input

Optional Testing & Certifications

API	API 617, API 672, API 614
Electrical	UL 508A, CE, CSA
Hazardous Location	ATEX, Class1 - Division 1- Division 2, Zone 0-2
Balancing	ISO 1940 - G2.5, ~4W/N API
Noise Level	OSHA 1910.95, ISO 2151:2004
Performance	ASME PTC-10, PTC-13, ISO 5389
Hydro Testing	1.5 Time MAWP
Overspeed Testing	Optional
Positive Material ID	XRF, OES, Material Certification
NACE Compliance	Optional
Special Coatings	Optional

ALTERNATIVE A - OPTION 1

BLOWER PERFORMANCE DATA AND CURVES

ALTERNATIVE A - GUARANTEES						
OPTION 1 - IGV and VFD (10,533 SCFM)						
Design Point	Capacity %	Discharge Air Flow Per Blower (scfm)	Discharge Pressure (psig)	Inlet Temp °F	RH %	Estimated Power HP
1	100	10,533	5.5	100	15	320
2	80	8,426	5.3	75	40	237
3	60	6,320	5.2	45	60	173
4	45	4,740	5.1	40	60	137
5	100	10,533	5.5	40	40	280
6	45	4,740	5.1	100	40	154

1. Ambient Pressure: 14.07 psia
2. Inlet Pressure at Blower Inlet Flange 13.87 psia

Notes:

1. Please note it is unclear what air flow per blower each estimated power number is associated with in the table in Section 11629/11371, 2.1.B, as there are multiple combinations and blowers online that could be utilized. For simplicity and clarity, we have included guarantee power numbers per blower, as detailed above. Performance curves are included for each condition. Additional points can be provided, if required.

1. It is assumed that air flow values provided are scfm, defined at (14.67 psia, 68°F, 36% RH), This is the typical industry standard and in accordance with process manufacturer's air flow calculation. If this assumption is incorrect, please advise and we will reevaluate blower selection, accordingly.

Lone Star Blower

GL SERIES – GEARED TURBO PERFORMANCE CURVE

Project:	City of Surprise
Project Ref:	Alternative A - Option 1
Engineer:	Water Works
Date:	10/4/22 2:10 PM

Technology:	Geared Turbo
Selected Model:	GL10

	Units	Design	Alt Flow	Alt Flow	Alt Flow	Alt Flow	Alt Flow
Volume Flow at Inlet	ICFM	11,859.5	10,673.5	9,487.6	7,115.7	5,336.8	4,743.8
Specified Volume	Delivered SCFM	10,533	9,479	8,426	6,320	4,740	4,213
Capacity	%	100	90	80	60	45	40
Specified Flow defined at	*Pressure* 14.7 PSIA						
	Temperature 68 °F						
	Relative Humidity 36 %						
Inlet Temperature	°F	100	100	100	100	100	100
Relative Humidity	%	15	15	15	15	15	15
Barometric Pressure	PSIA	14.07	14.07	14.07	14.07	14.07	14.07
Inlet Pressure Losses	PSIG	0.20	0.20	0.20	0.20	0.20	0.20
Pressure at Inlet	PSIA	13.87	13.87	13.87	13.87	13.87	13.87
Pressure at Discharge	PSIG	5.50	5.50	5.30	5.20	5.10	5.10
Total Delta Pressure	PSID	5.70	5.70	5.50	5.40	5.30	5.30
Temperature at Discharge	°F	166.50	165.11	163.22	163.54	165.74	166.60
Blower Speed	RPM	7572	7514	7279	7168	7067	7072
Gearbox Input Shaft Power	HP	319.74	283.97	247.19	190.69	151.90	138.62

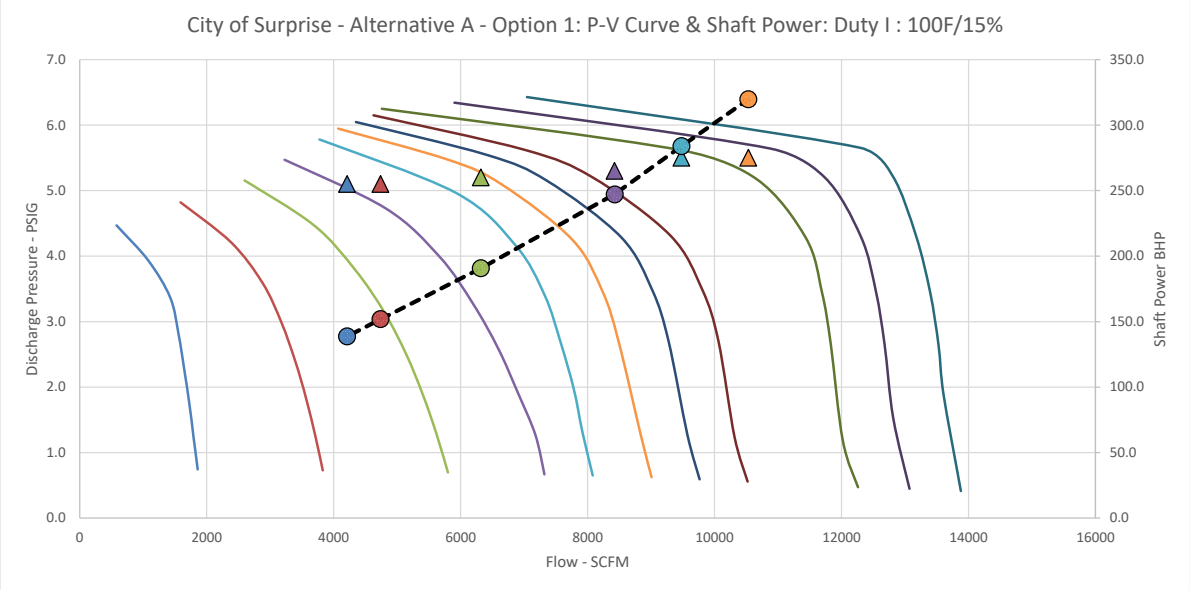

Lone Star Blower

GL SERIES – GEARED TURBO PERFORMANCE CURVE

Project:	City of Surprise
Project Ref:	Alternative A - Option 1
Engineer:	Water Works
Date:	10/4/22 2:10 PM

Technology:	Geared Turbo
Selected Model:	GL10

	Units	Alt Flow	Alt Flow	Alt Flow	Alt Flow	Alt Flow	Alt Flow
Volume Flow at Inlet	ICFM	11,353.6	10,218.3	9,082.9	6,812.2	5,109.1	4,541.5
Specified Volume	Delivered SCFM	10,533	9,479	8,426	6,320	4,740	4,213
Capacity	%	100	90	80	60	45	40
Specified Flow defined at	*Pressure* *14.7* *PSIA*						
	Temperature *68* *°F*						
	Relative Humidity *36* *%*						
Inlet Temperature	°F	75	75	75	75	75	75
Relative Humidity	%	40	40	40	40	40	40
Barometric Pressure	PSIA	14.07	14.07	14.07	14.07	14.07	14.07
Inlet Pressure Losses	PSIG	0.20	0.20	0.20	0.20	0.20	0.20
Pressure at Inlet	PSIA	13.87	13.87	13.87	13.87	13.87	13.87
Pressure at Discharge	PSIG	5.50	5.50	5.30	5.20	5.20	5.10
Total Delta Pressure	PSID	5.70	5.70	5.50	5.40	5.40	5.30
Temperature at Discharge	°F	138.19	137.20	135.43	135.83	139.07	138.67
Blower Speed	RPM	7191	7184	6959	6854	6873	6762
Gearbox Input Shaft Power	HP	304.79	272.05	236.96	183.05	148.42	132.95

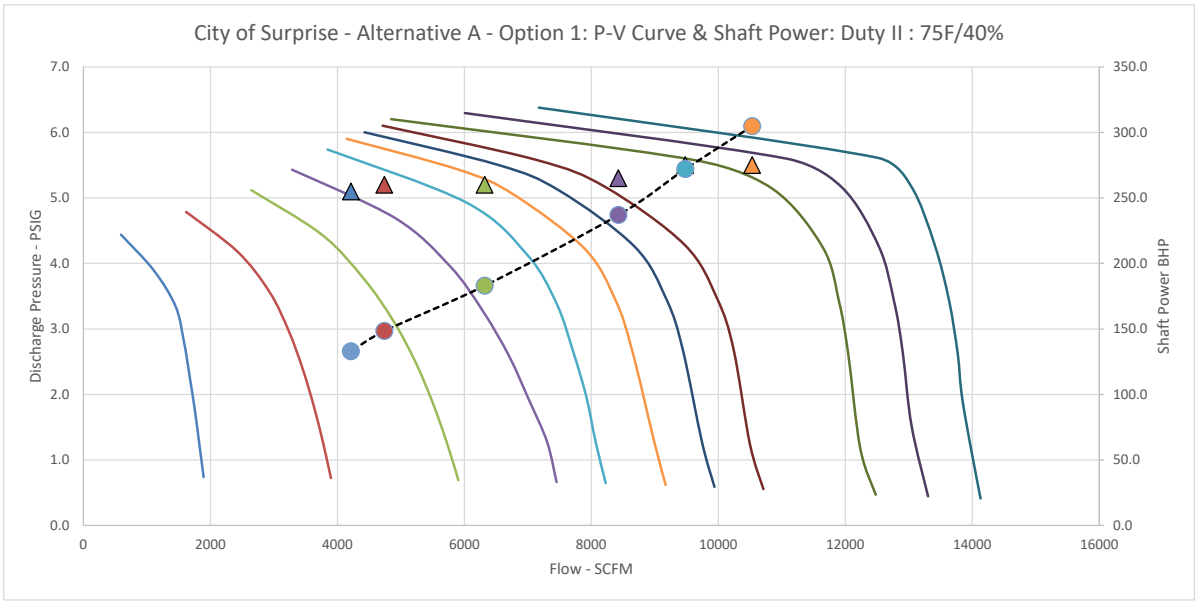

Lone Star Blower

GL SERIES – GEARED TURBO PERFORMANCE CURVE

Project:	City of Surprise
Project Ref:	Alternative A - Option 1
Engineer:	Water Works
Date:	10/4/22 2:10 PM

Technology:	Geared Turbo
Selected Model:	GL10

	Units	Alt Flow	Alt Flow	Alt Flow	Alt Flow	Alt Flow	Alt Flow
Volume Flow at Inlet	ICFM	10,652.6	9,587.4	8,522.1	6,391.6	4,793.7	4,261.0
Specified Volume	Delivered SCFM	10,533	9,479	8,426	6,320	4,740	4,213
Capacity	%	100	90	80	60	45	40
Specified Flow defined at	*Pressure* 14.7 PSIA						
	Temperature 68 °F						
	Relative Humidity 36 %						
Inlet Temperature	°F	45	45	45	45	45	45
Relative Humidity	%	60	60	60	60	60	60
Barometric Pressure	PSIA	14.07	14.07	14.07	14.07	14.07	14.07
Inlet Pressure Losses	PSIG	0.20	0.20	0.20	0.20	0.20	0.20
Pressure at Inlet	PSIA	13.87	13.87	13.87	13.87	13.87	13.87
Pressure at Discharge	PSIG	5.50	5.50	5.30	5.20	5.10	5.10
Total Delta Pressure	PSID	5.70	5.70	5.50	5.40	5.30	5.30
Temperature at Discharge	°F	104.17	103.80	102.19	102.76	104.80	105.29
Blower Speed	RPM	6769	6767	6555	6457	6366	6369
Gearbox Input Shaft Power	HP	283.82	255.67	222.94	172.81	137.81	125.23

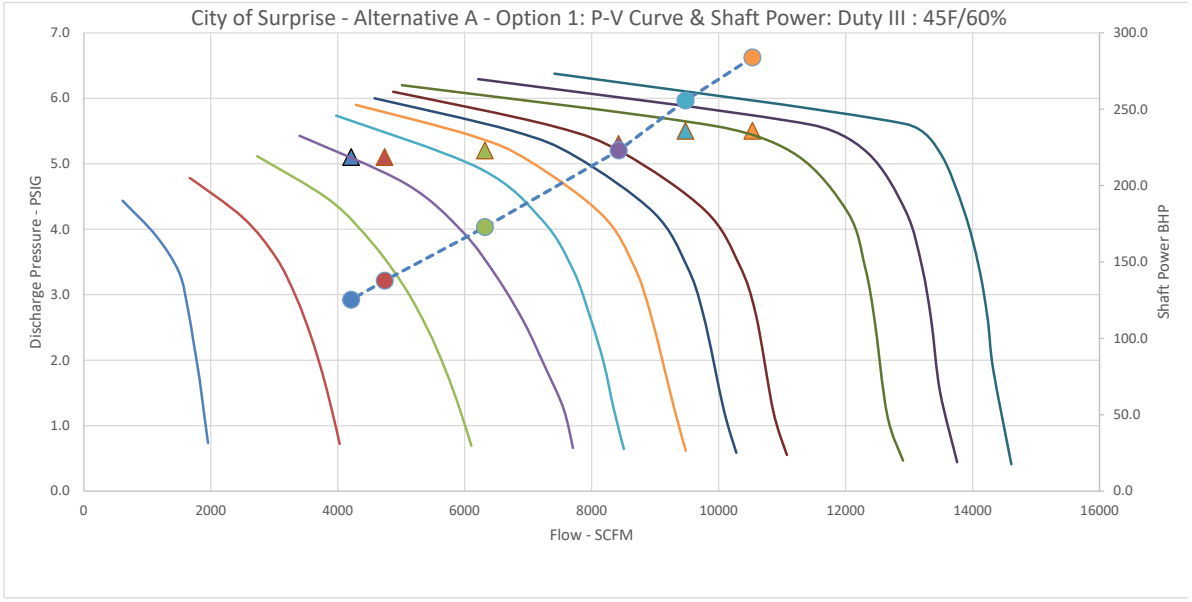

Lone Star Blower

GL SERIES – GEARED TURBO PERFORMANCE CURVE

Project:	City of Surprise
Project Ref:	Alternative A - Option 1
Engineer:	Water Works
Date:	10/4/22 2:29 PM

Technology:	Geared Turbo
Selected Model:	GL10

	Units	Alt Flow	Alt Flow	Alt Flow	Alt Flow	Alt Flow	Alt Flow
Volume Flow at Inlet	ICFM	10,535.3	9,481.8	8,428.3	6,321.2	4,740.9	4,214.1
Specified Volume	Delivered SCFM	10,533	9,479	8,426	6,320	4,740	4,213
Capacity	%	100	90	80	60	45	40
Specified Flow defined at	*Pressure 14.7 PSIA*						
	Temperature 68 °F						
	Relative Humidity 36 %						
Inlet Temperature	°F	40	40	40	40	40	40
Relative Humidity	%	60	60	60	60	60	60
Barometric Pressure	PSIA	14.07	14.07	14.07	14.07	14.07	14.07
Inlet Pressure Losses	PSIG	0.20	0.20	0.20	0.20	0.20	0.20
Pressure at Inlet	PSIA	13.87	13.87	13.87	13.87	13.87	13.87
Pressure at Discharge	PSIG	5.50	5.50	5.30	5.20	5.10	5.10
Total Delta Pressure	PSID	5.70	5.70	5.50	5.40	5.30	5.30
Temperature at Discharge	°F	98.50	98.23	96.65	97.27	99.24	99.72
Blower Speed	RPM	6699	6697	6488	6391	6301	6303
Gearbox Input Shaft Power	HP	280.34	252.93	220.60	171.17	136.38	123.94

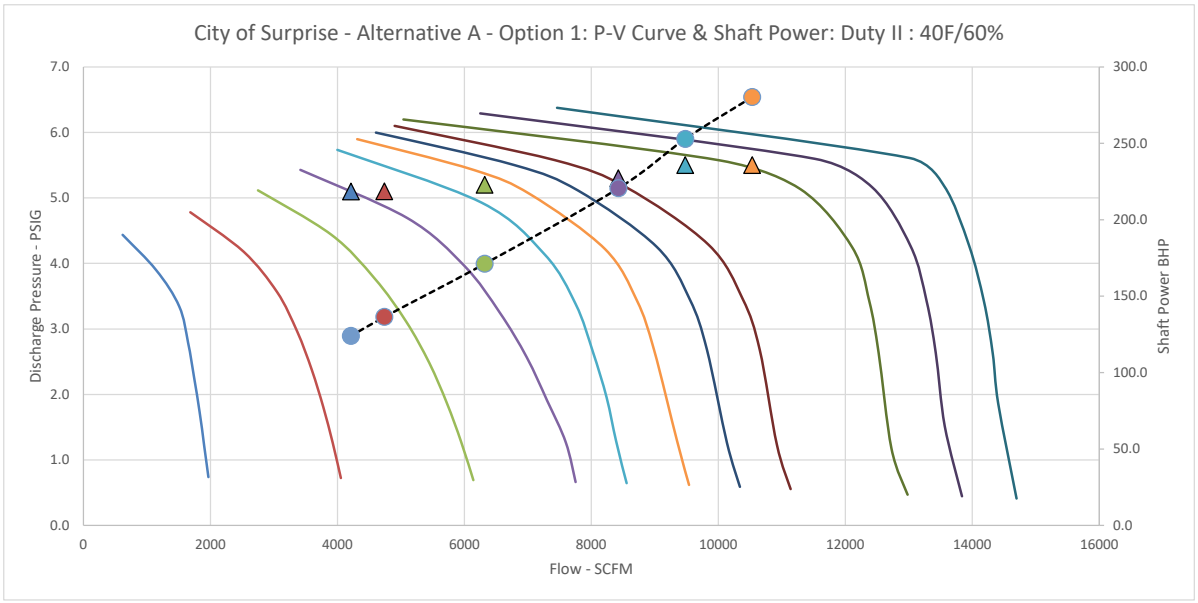

Lone Star Blower

GL SERIES – GEARED TURBO PERFORMANCE CURVE

Project:	City of Surprise
Project Ref:	Alternative A - Option 1
Engineer:	Water Works
Date:	10/4/22 2:33 PM

Technology:	Geared Turbo
Selected Model:	GL10

	Units	Alt Flow	Alt Flow	Alt Flow	Alt Flow	Alt Flow	Alt Flow
Volume Flow at Inlet	ICFM	10,517.2	9,465.4	8,413.7	6,310.3	4,732.7	4,206.9
Specified Volume	Delivered SCFM	10,533	9,479	8,426	6,320	4,740	4,213
Capacity	%	100	90	80	60	45	40
Specified Flow defined at	*Pressure 14.7 PSIA*						
	Temperature 68 °F						
	Relative Humidity 36 %						
Inlet Temperature	°F	40	40	40	40	40	40
Relative Humidity	%	40	40	40	40	40	40
Barometric Pressure	PSIA	14.07	14.07	14.07	14.07	14.07	14.07
Inlet Pressure Losses	PSIG	0.20	0.20	0.20	0.20	0.20	0.20
Pressure at Inlet	PSIA	13.87	13.87	13.87	13.87	13.87	13.87
Pressure at Discharge	PSIG	5.50	5.50	5.30	5.20	5.10	5.10
Total Delta Pressure	PSID	5.70	5.70	5.50	5.40	5.30	5.30
Temperature at Discharge	°F	98.50	98.25	96.67	97.31	99.26	99.75
Blower Speed	RPM	6694	6693	6483	6387	6297	6300
Gearbox Input Shaft Power	HP	279.79	252.53	220.26	170.95	136.18	123.77

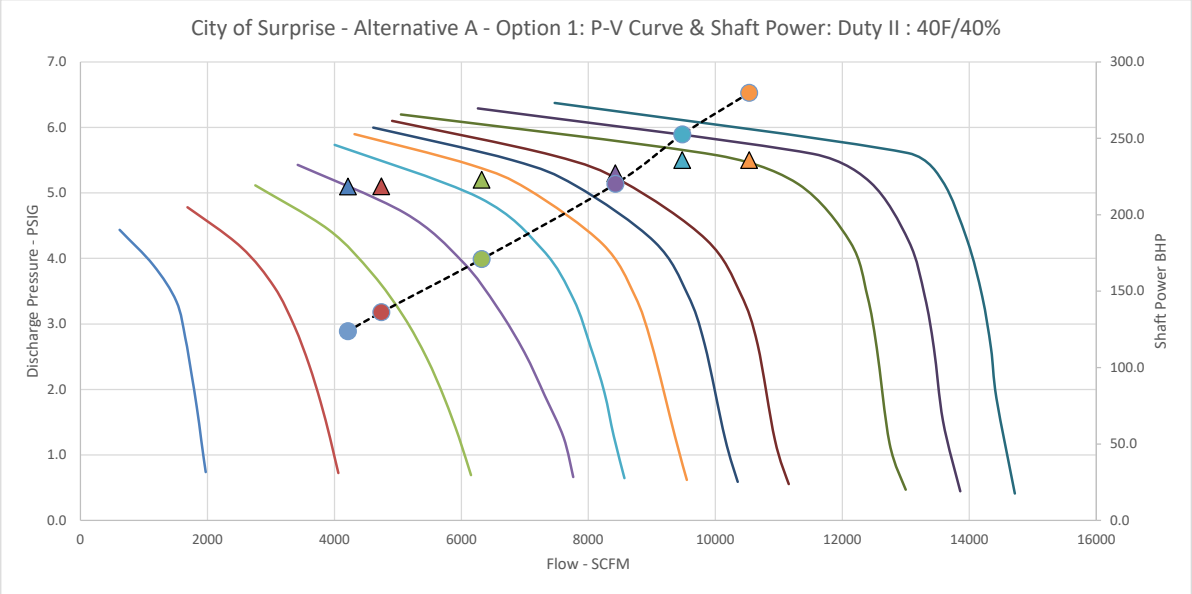

Lone Star Blower

GL SERIES – GEARED TURBO PERFORMANCE CURVE

Project:	City of Surprise
Project Ref:	Alternative A - Option 1
Engineer:	Water Works
Date:	10/4/22 2:33 PM

Technology:	Geared Turbo
Selected Model:	GL10

	Units		Alt Flow	Alt Flow	Alt Flow	Alt Flow	Alt Flow	Alt Flow
Volume Flow at Inlet	ICFM		12,064.4	10,857.9	9,651.5	7,238.6	5,429.0	4,825.8
Specified Volume	Delivered SCFM		10,533	9,479	8,426	6,320	4,740	4,213
Capacity	%		100	90	80	60	45	40
Specified Flow defined at	*Pressure*	*14.7 PSIA*						
	Temperature	*68 °F*						
	Relative Humidity	*36 %*						
Inlet Temperature	°F		100	100	100	100	100	100
Relative Humidity	%		40	40	40	40	40	40
Barometric Pressure	PSIA		14.07	14.07	14.07	14.07	14.07	14.07
Inlet Pressure Losses	PSIG		0.20	0.20	0.20	0.20	0.20	0.20
Pressure at Inlet	PSIA		13.87	13.87	13.87	13.87	13.87	13.87
Pressure at Discharge	PSIG		5.50	5.50	5.30	5.20	5.10	5.10
Total Delta Pressure	PSID		5.70	5.70	5.50	5.40	5.30	5.30
Temperature at Discharge	°F		166.63	164.95	163.01	163.22	165.33	166.33
Blower Speed	RPM		7572	7561	7324	7212	7110	7116
Gearbox Input Shaft Power	HP		326.46	288.70	251.08	193.31	153.81	140.62

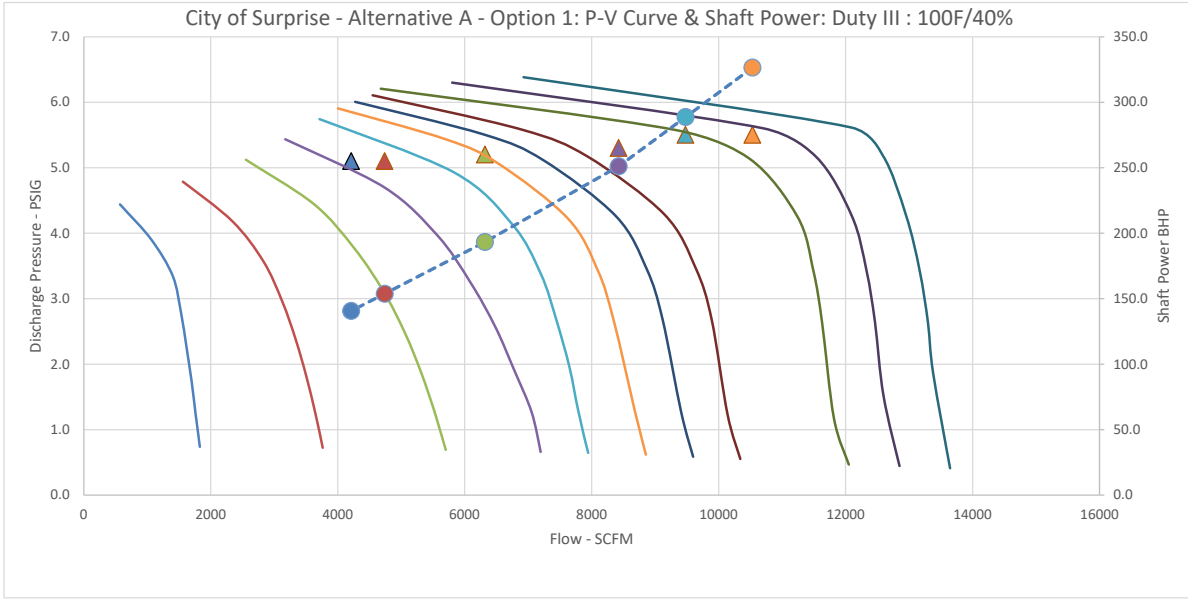

REVISION HISTORY			
REV	DESCRIPTION	DATE	APPROVED
1	AIR OUTLET VERTICALLY UP	5/27/2016	
2	RENAMED DWG FROM GL10-WX-03 TO GL10-WX-01, CONVERTED FROM mm TO INCHES	7/12/2016	

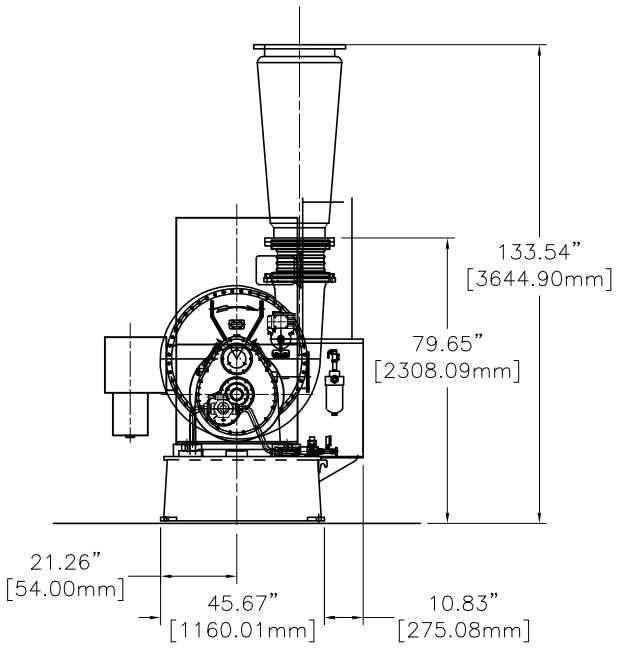

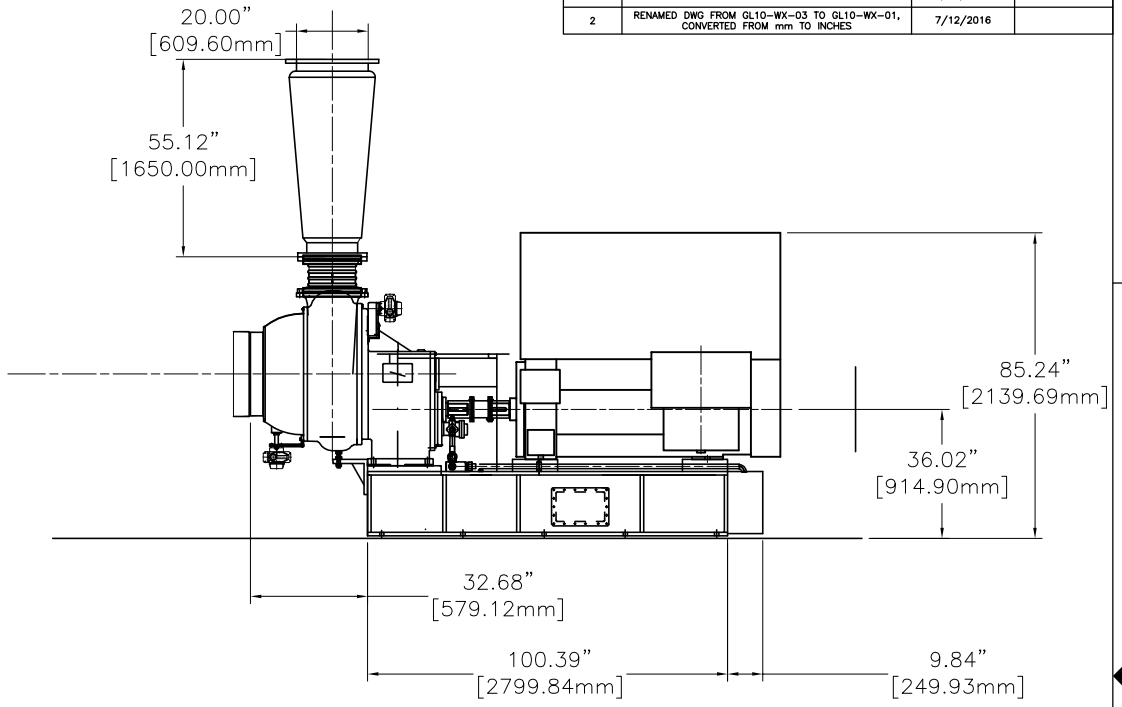

N

D **r** **d** **r** **d** **r**

E **d** **r** **d**

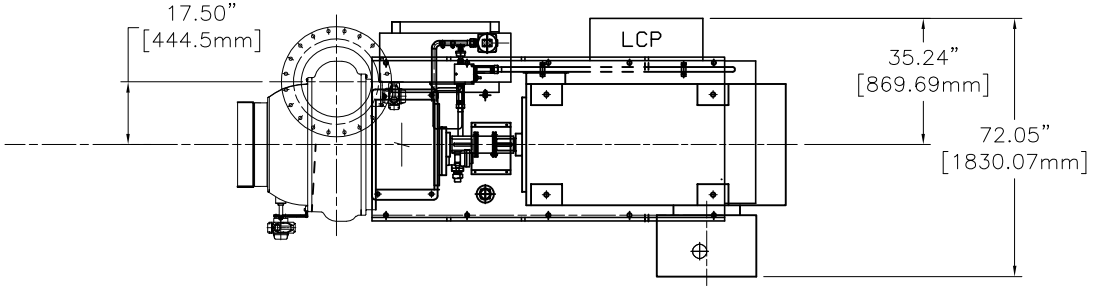

DRAWING IS FOR REFERENCE ONLY UNLESS SPECIFIED AS RELEASED.		
APPROVALS		
DRAWN	BW	07/012/2016
CHECK		
ENGINEER		
MANUFACTURING		
CONTROL		
APPROVED		

THIRD ANGLE PROJECTION

LONE STAR BLOWER

TITLE

GL-10 GEARED TURBO
GENERAL ASSEMBLY 20" CONE

SIZE	CAGE CODE	DWG NUMBER	REV
A	-	GL10-WX-01	02
SCALE		SHEET 1 OF 1	

BILL OF MATERIALS			
ITEM NO.	PART NUMBER	QTY.	DESCRIPTION
1	N/A	1	BLOWER,
2	2000600001	1	PUMP, OIL, AUX, TOP-N350HVB, NIPPON
3	1000976003	2	ACTUATOR, GUIDE VANE, 110 V, RCEL-009L
4	TBD	1	SKID
5	TBD	1	MOTOR, ELECTRIC
6	TBD	1	COUPLING, DISC, XTSR71-1088, REXNORD
7	2000600056	8	ISOLATOR, GL, VIBRATION, ASMR-1E-1400
8	2000600014	3	MAGNET, GL, OIL TANK, CERAMIC, 99N005
9	2000300030	1	FILL CAP, GL, SKID MAIN OIL CIRCUIT, LENZ, FCS-557
10	2002000009	1	AUX PUMP SUB ASSY(LESS PUMP & MOTOR), GL1-GL20
11	1000900017	1	PUMP MOTOR, GL, 1LE1001-1AB42, SIEMENS
12	2002000000	1	ACTIVE DEMISTER SUB ASSY (LESS CHIMNEY), GL1-GL20
13	2000600088	1	DEMISTER CHIMNEY, ACTIVE, GL, 10.75", SKID
14	2000600036	1	PUMP, OIL, MECHANICAL, TOP-N340HVB, NIPPON
15	2000600002	1	FILTER, LF330, SKID
16	2000608081	1	BASE, GL8, GUARD, DISC
17	2000608082	1	GUARD, GL8, COUPLING, DISC
18	2000608083	1	FILTER MOUNT BRACKET, GL8
19	TBD	1	OIL COOLER, GL, WATER,
20	2000600007	1	OIL HEATER, 480V, SRY6-5
21	TBD	1	MOUNT, LCP
22	1000976067	1	TEMP PROBE, RTD, 6", 1/4" MNPT, -200/600°C, TH11-F2CAB31AK1, ENDRESS HAUSER
23	1000976050	1	PRESSURE SENSOR, 1/4" MNPT, 0-30 PSIA, PTP31B-AA7M2KGFVUJ, ENDRESS HAUSER
24	1000976056	1	PRESSURE SENSOR, 1/4" MNPT, 0-30 PSIG, PTP31B-AA7M1KGFVUJ, ENDRESS HAUSER
25	1000976085	1	TEMP PROBE, RTD, 9", 1/4" MNPT, -50/200°C, TH11-F3CAB31AK1, ENDRESS HAUSER
26	1000976066	1	TEMP PROBE, RTD, 12", 1/4" MNPT, -50/200°C, TH11-F4CAB31AK1, ENDRESS HAUSER
27	1000976058	1	TEMP PROBE, RTD, 30mm, 1/4" MNPT, TTR31-A1C11UDA1AAB, ENDRESS HAUSER
28	1000976057	1	PRESSURE SWITCH, 1/4" MNPT, 0-60 PSIG, PTP31B-AA7M1MGFVUJ, ENDRESS HAUSER
29	1000976071	1	TRANSDUCER, PRESSURE, 1/8", 100 PSI, GC55-7-F01-42-CG-100, ASHCROFT
30	1000976073	1	SURGE SENSOR, IGC209, IFM
31	1000976025	1	ZERO SPEED SENSOR, TURCK BI 5-M18E-RP6X-H1143, GEARBOX
32	1000976097	2	PROXIMITY PROBE, M10 x 1, 200mm, 1 METER ARMORED CABLE, WL-142K05T-M200202/NB1, SHINKAWA
33	1000976096	1	PROXIMITY PROBE, M10 x 1, 120mm, 1 METER ARMORED CABLE, WL-142K05T-M200122/NB1, SHINKAWA
34	1000976098	3	EXTENSION CABLE, ARMORED, 4 METER, WW-142KT-1/NB1, SHINKAWA
35	1000976076	4	INSTRUMENT CABLE, M12, 90 DEGREE, 10 METER, EVC009, IFM
36	1000976042	1	INSTRUMENT CABLE, M12, STRAIGHT, 10 METER, EVC003, IFM
37	1000976035	1	CURRENT TRANSMITTER, 0-300 AMP, H221, HAWKEYE
38	2000600009	1	LEVEL GAUGE, GL, OIL TANK, 1111K28, 1/2" MNPTF
39	1000976033	1	DP TRANSMITTER, AIR FILTER, 0-5 IN WC, MS2-W102-LCD, DWYER
40	2002008001	1	ASSEMBLY, SKID MAIN OIL CIRCUIT, GL8-20 , LOCAL AIR COOLED
41	N/A	1	FLEXIBLE CONNECTOR
42	N/A	1	DISCHARGED CONE
43	N/A	1	LCP
44	N/A	1	INLET FILTER

PART #	MATERIAL SPECIFICATION	WEIGHT (lb)
2001200018		

REVISION HISTORY				
REFERENCE DOC	REV	DESCRIPTION	DATE	APPROVED
	0			

N

S **dr** **r** **r**

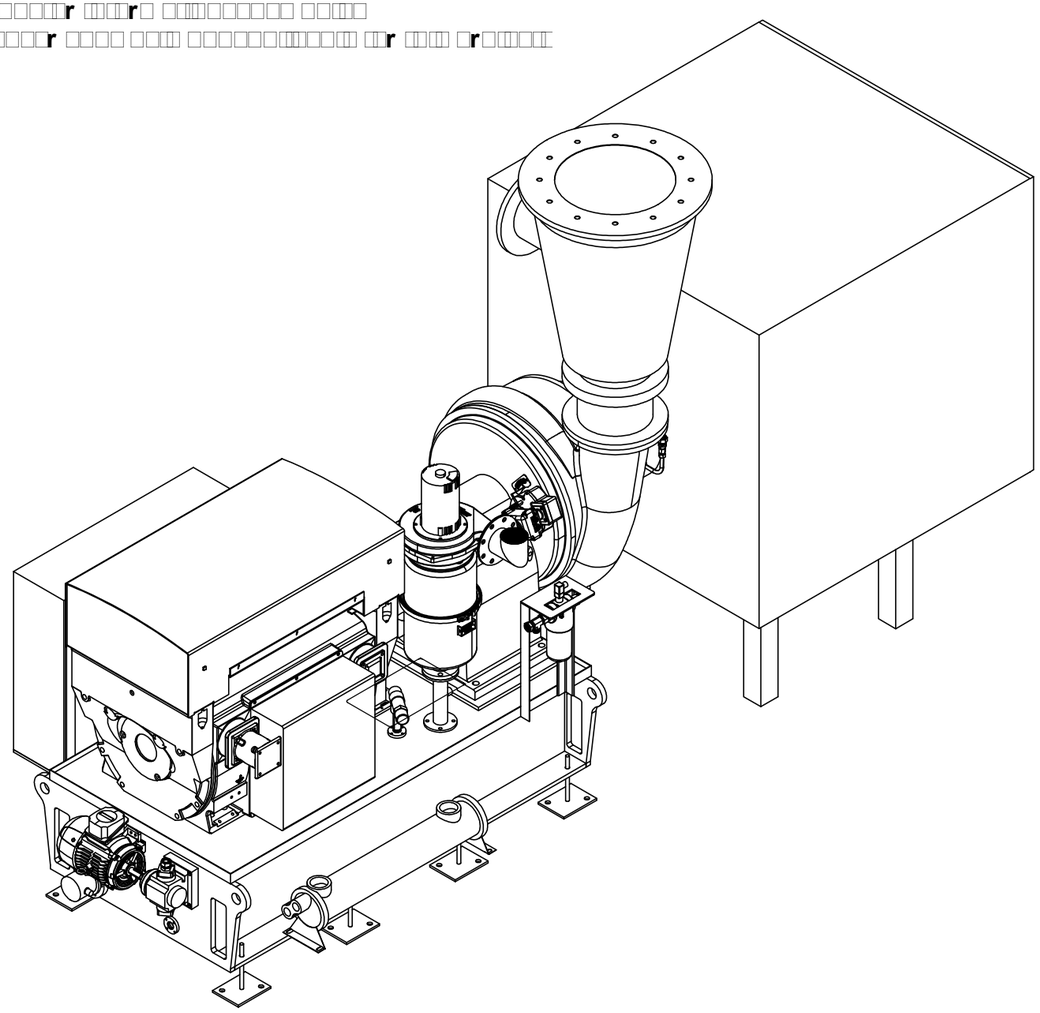

INTERPET ALL GEOMETRIC DIMENSIONING AND TOLERANCING TO ASME Y14.5

ALL DIMENSIONS ARE IN INCHES UNLESS OTHERWISE SPECIFIED

STANDARD TOLERANCES

.X	±.015
.XX	±.010
.XXX	±.005
X/X	±1/16
ANGLES	± 1°

REMOVE BURRS AND BREAK ALL SHARP EDGES
MACHINED SURFACES 125

DRAWING IS FOR REFERENCE ONLY UNLESS SPECIFIED AS APPROVED

THE INFORMATION CONTAINED IN THIS DRAWING IS THE SOLE PROPERTY OF LONE STAR BLOWER. ANY REPRODUCTION IN PART OR AS A WHOLE WITHOUT THE WRITTEN PERMISSION OF LONE STAR BLOWER IS PROHIBITED.

DRAWN BY: TS	DATE: 09/20/2022
CHECKED BY	DATE
APPROVED BY	DATE

THIRD ANGLE PROJECTION

LONE STAR

GENERAL ARRANGEMENT, 5010/5011, LOCAL WAT COOLED, W/ MOUNTED LCP

SIZE	DWG. NO.	REV
B	2008000261	0

SCALE: 1:25 | DO NOT SCALE | SHEET 1 OF 4

REVISION HISTORY				
REFERENCE DOC	REV	DESCRIPTION	DATE	APPROVED
	0			

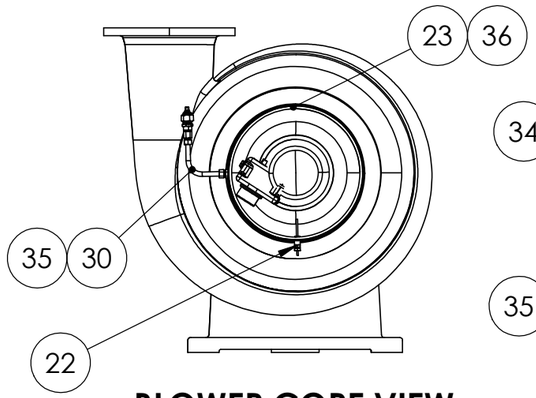

BLOWER CORE VIEW

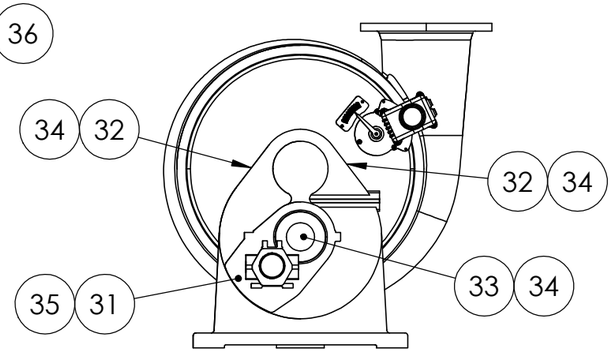

GEARBOX CORE VIEW

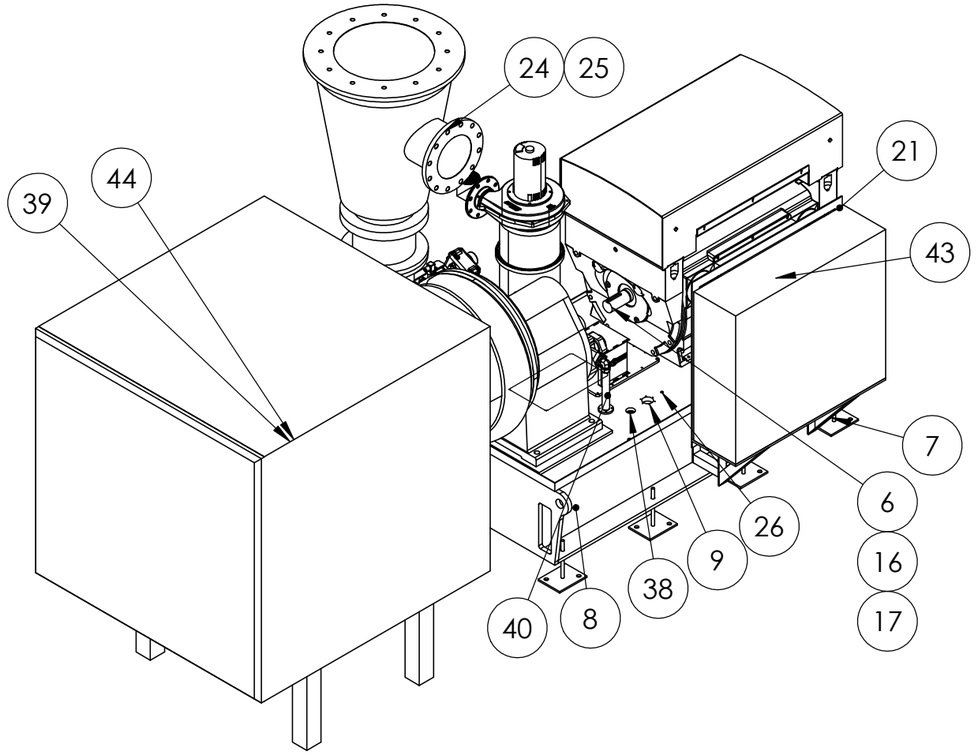

TOP BLOWER SIDE ISO VIEW

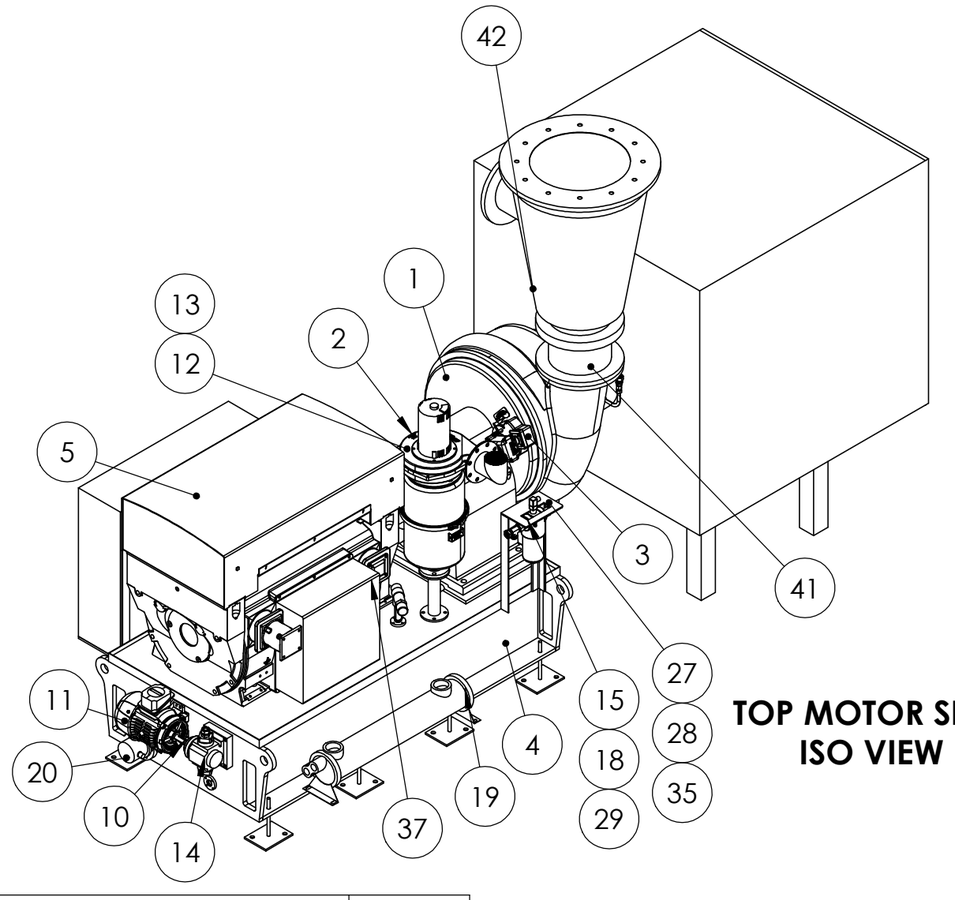

TOP MOTOR SIDE ISO VIEW

N
S dr r r

PART #	MATERIAL SPECIFICATION	WEIGHT (lb)
2001200018		

INTERPET ALL GEOMETRIC DIMENSIONING AND TOLERANCING TO ASME Y14.5

ALL DIMENSIONS ARE IN INCHES UNLESS OTHERWISE SPECIFIED

STANDARD TOLERANCES

.X	±.015
.XX	±.010
.XXX	±.005
X/X	±1/16
ANGLES	± 1°

REMOVE BURRS AND BREAK ALL SHARP EDGES
MACHINED SURFACES 125

DRAWING IS FOR REFERENCE ONLY UNLESS SPECIFIED AS APPROVED

THE INFORMATION CONTAINED IN THIS DRAWING IS THE SOLE PROPERTY OF LONE STAR BLOWER. ANY REPRODUCTION IN PART OR AS A WHOLE WITHOUT THE WRITTEN PERMISSION OF LONE STAR BLOWER IS PROHIBITED.

DRAWN BY TS	DATE 09/20/2022
CHECKED BY	DATE
APPROVED BY	DATE

THIRD ANGLE PROJECTION

LONE STAR

GENERAL ARRANGEMENT, GL8, 5010/5011, LOCAL WATER COOLED, W/ MOUNTED LCP

SIZE	DWG. NO.	REV
B	2008000261	0
SCALE: 1:30	DO NOT SCALE	SHEET 2 OF 4

OPTION 2

GL-10

Integrally Geared Single Stage Blower

Model GL-10

Standard Specifications

Gas	Air, Steam, H2S, Biogas, Fuel Gas, CO2, N2, LNG, Custom
Flow Range	100% to 35% of Rated Flow with Combination Control
Pressure Range	Up to 30 PSIG / 2 bar
Maximum Case Pressure	50 PSIG / 3.5 bar
Stages	Single Stage
Drive Type	Direct Coupled
Power Driver Options	Electric Motor, Steam Turbine, Combustion Engine
Gearbox	Helical Gear Set
Cooling Lubricant	Lubricant Cooling (Air or Liquid)
Lubrication Options	Pressurized Oil
Bearings	Pinion - Tilt Pad Journal, Drive Journal
Enclosure	Optional
Sound Level	Job Specific
Sound Level with Enclosure	Job Specific
Filtration Rating (std)	99% at 2 micron, or as required
Seals Air	Labyrinth Type

Service

Air, Gas, Pressure, Vacuum

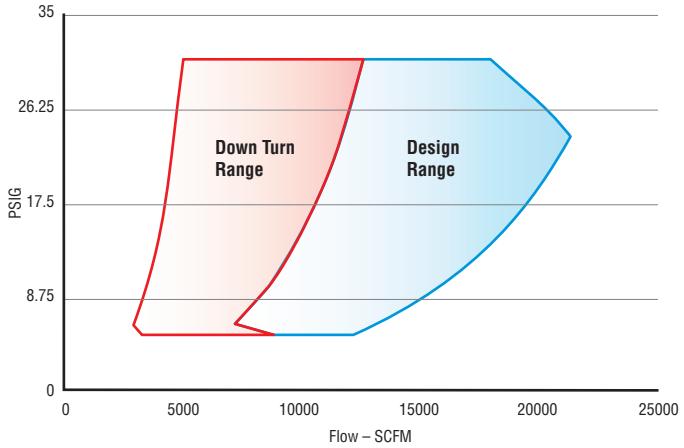

Standard Materials of Construction

Casing	Grey Iron GG25, Ductile, ASTM A536, A48 or Equal
Bearings	ANSI 5140 Steel, Babbited, 40CR Alloy Casing
Impeller	AlCu2MgNi Alloy (annodized), 17-4PH, Titanium, Inconel
Inlet Guide Vanes	Stainless Steel 316
Discharge Diffuser Vanes	Stainless Steel 316
Gears	AISI 8620, Steel 10CrNiMo to AGMA 12/13
Shaft	Steel 10CrNiMo
Seals Air	ASTM B86 Z25631 Zinc Alloy Aluminum
Seals Gas	ASTM C695 Molded Graphite
Blower Base Skid	ASTM A36 Structural Steel
Isolation Pads	St. SIS 1312 inertial dampening with rubber hardness 60
Finish	2 Part Epoxy Lone Star Blue RAL5005
Enclosure	Aluminum, Galvanized Steel, Stainless

Control Options

Control Methods	Variable Inlet and Discharge Guide Vane, speed control, blow off, or combination
Local Controller	sLOC™ Standard - Custom for Allen Bradley, Modicon, Siemens or Other
HMI	sLOC™ Standard or Custom HMI
Remote Monitoring	sLINK™ or Custom
Control Set Points	Pressure, Flow, Power, Custom Input

Optional Testing & Certifications

API	API 617, API 672, API 614
Electrical	UL 508A, CE, CSA
Hazardous Location	ATEX, Class1 - Division 1- Division 2, Zone 0-2
Balancing	ISO 1940 - G2.5, ~4W/N API
Noise Level	OSHA 1910.95, ISO 2151:2004
Performance	ASME PTC-10, PTC-13, ISO 5389
Hydro Testing	1.5 Time MAWP
Overspeed Testing	Optional
Positive Material ID	XRF, OES, Material Certification
NACE Compliance	Optional
Special Coatings	Optional

ALTERNATIVE A - OPTION 2

BLOWER PERFORMANCE DATA AND CURVES

ALTERNATIVE A - GUARANTEES						
OPTION 2 - IGV and VD (10,533 SCFM)						
Design Point	Capacity %	Discharge Air Flow Per Blower (scfm)	Discharge Pressure (psig)	Inlet Temp °F	RH %	Estimated Power HP
1	100	10,533	5.5	100	15	322
2	80	8,426	5.3	75	40	245
3	60	6,320	5.2	45	60	184
4	45	4,740	5.1	40	60	149
5	100	10,533	5.5	40	40	297
6	45	4,740	5.1	100	40	156

1. Ambient Pressure: 14.07 psia
2. Inlet Pressure at Blower Inlet Flange 13.87 psia

Notes:

2. Please note it is unclear what air flow per blower each estimated power number is associated with in the table in Section 11629/11371, 2.1.B, as there are multiple combinations and blowers online that could be utilized. For simplicity and clarity, we have included guarantee power numbers per blower, as detailed above. Performance curves are included for each condition. Additional points can be provided, if required.

3. It is assumed that air flow values provided are scfm, defined at (14.67 psia, 68°F, 36% RH), This is the typical industry standard and in accordance with process manufacturer's air flow calculation. If this assumption is incorrect, please advise and we will reevaluate blower selection, accordingly.

Lone Star Blower

GL SERIES – GEARED TURBO PERFORMANCE CURVE

Project:	City of Surprise
Project Ref:	Alternative A, Option 2
Engineer:	Water Works
Date:	10/2/22 5:06 PM

Technology:	Geared Turbo
Selected Model:	GL10

	Units	**Design**	Alt Flow	Alt Flow	Alt Flow	Alt Flow	Alt Flow
Volume Flow at Inlet	ICFM	11,859.5	10,673.5	9,487.6	7,115.7	5,336.8	4,743.8
Specified Volume	Delivered SCFM	10,533	9,480	8,427	6,320	4,740	4,213
Capacity	%	100	90	80	60	45	40
Specified Flow defined at	*Pressure* *14.7 PSIA*						
	Temperature *68 °F*						
	Relative Humidity *36 %*						
Inlet Temperature	°F	100	100	100	100	100	100
Relative Humidity	%	15	15	15	15	15	15
Barometric Pressure	PSIA	14.07	14.07	14.07	14.07	14.07	14.07
Inlet Pressure Losses	PSIG	0.20	0.20	0.20	0.20	0.20	0.20
Pressure at Inlet	PSIA	13.87	13.87	13.87	13.87	13.87	13.87
Pressure at Discharge	PSIG	5.50	5.50	5.30	5.20	5.10	5.10
Total Delta Pressure	PSIG	5.70	5.70	5.50	5.40	5.30	5.30
Temperature at Discharge	°F	166.81	165.59	163.84	164.09	166.31	167.65
Maximum Rise to Surge	PSIG	0.77					
Blower Speed	RPM	7488					
Gearbox Input Shaft Power	HP	321.29	286.09	250.04	192.98	154.07	141.53

City of Surprise - Alternative A, Option 2: P-V Curve & Shaft Power: Duty I : 100F/15%

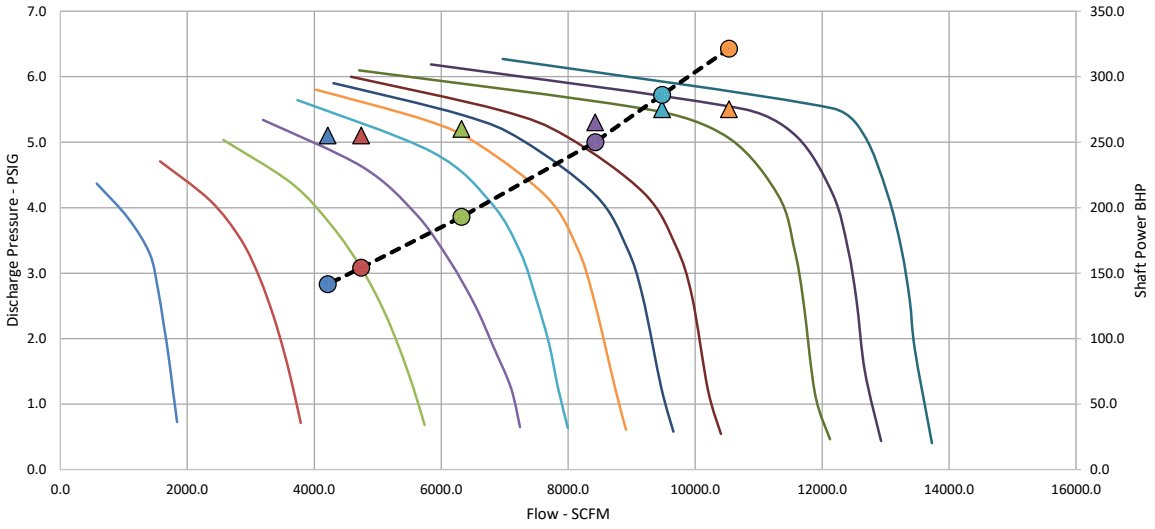

Lone Star Blower

GL SERIES – GEARED TURBO PERFORMANCE CURVE

Project:	City of Surprise
Project Ref:	Alternative A, Option 2
Engineer:	Water Works
Date:	10/2/22 5:06 PM

Technology:	Geared Turbo
Selected Model:	GL10

	Units	Alt Flow	Alt Flow	Alt Flow	Alt Flow	Alt Flow	Alt Flow
Volume Flow at Inlet	ICFM	11,353.6	10,218.3	9,082.9	6,812.2	5,109.1	4,541.5
Specified Volume	Delivered SCFM	10,533	9,480	8,427	6,320	4,740	4,213
Capacity	%	100	90	80	60	45	40
Specified Flow defined at	*Pressure* *14.7 PSIA*						
	Temperature *68 °F*						
	Relative Humidity *36 %*						
Inlet Temperature	°F	75	75	75	75	75	75
Relative Humidity	%	40	40	40	40	40	40
Barometric Pressure	PSIA	14.07	14.07	14.07	14.07	14.07	14.07
Inlet Pressure Losses	PSIG	0.20	0.20	0.20	0.20	0.20	0.20
Pressure at Inlet	PSIA	13.87	13.87	13.87	13.87	13.87	13.87
Pressure at Discharge	PSIG	5.50	5.50	5.30	5.30	5.20	5.10
Total Delta Pressure	PSIG	5.70	5.70	5.50	5.50	5.40	5.30
Temperature at Discharge	°F	138.43	138.29	137.22	138.31	140.66	141.85
Maximum Rise to Surge	PSIG	1.09					
Blower Speed	RPM	7488					
Gearbox Input Shaft Power	HP	306.62	277.29	244.70	191.28	153.07	140.36

City of Surprise - Alternative A, Option 2: P-V Curve & Shaft Power: Duty II : 75F/40%

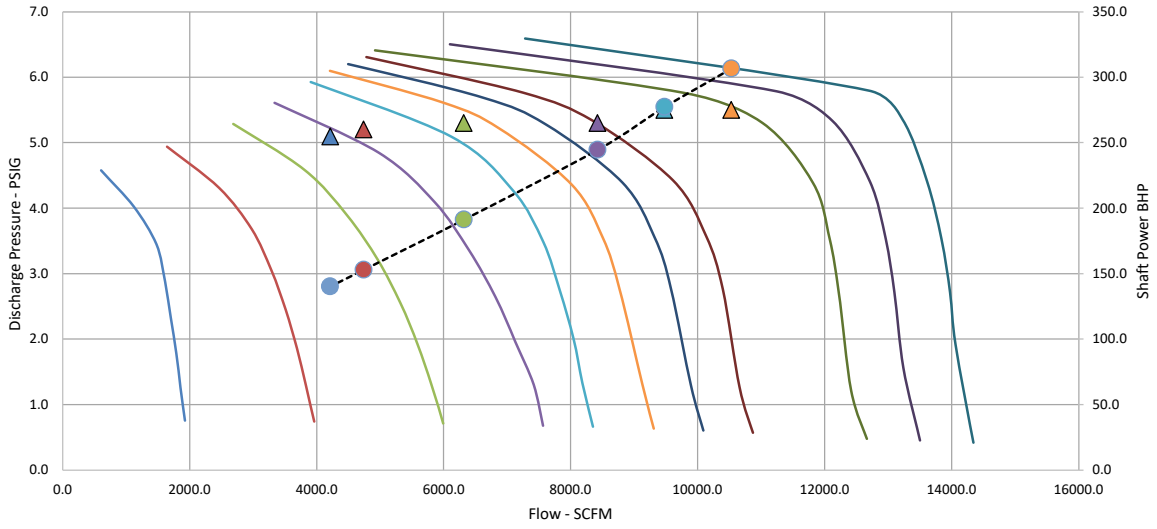

Lone Star Blower

GL SERIES – GEARED TURBO PERFORMANCE CURVE

Project:	City of Surprise
Project Ref:	Alternative A, Option 2
Engineer:	Water Works
Date:	10/2/22 5:06 PM

Technology:	Geared Turbo
Selected Model:	GL10

	Units	Alt Flow	Alt Flow	Alt Flow	Alt Flow	Alt Flow	Alt Flow
Volume Flow at Inlet	ICFM	10,652.6	9,587.4	8,522.1	6,391.6	4,793.7	4,261.0
Specified Volume	Delivered SCFM	10,533	9,480	8,427	6,320	4,740	4,213
Capacity	%	100	90	80	60	45	40
Specified Flow defined at	*Pressure* *14.7 PSIA*						
	Temperature *68 °F*						
	Relative Humidity *36 %*						
Inlet Temperature	°F	45	45	45	45	45	45
Relative Humidity	%	60	60	60	60	60	60
Barometric Pressure	PSIA	14.07	14.07	14.07	14.07	14.07	14.07
Inlet Pressure Losses	PSIG	0.20	0.20	0.20	0.20	0.20	0.20
Pressure at Inlet	PSIA	13.87	13.87	13.87	13.87	13.87	13.87
Pressure at Discharge	PSIG	5.50	5.50	5.30	5.20	5.10	5.10
Total Delta Pressure	PSIG	5.70	5.70	5.50	5.40	5.30	5.30
Temperature at Discharge	°F	106.99	106.81	105.65	105.87	109.15	110.86
Maximum Rise to Surge	PSIG	1.55					
Blower Speed	RPM	7488					
Gearbox Input Shaft Power	HP	298.17	269.49	237.48	183.45	149.06	137.73

City of Surprise - Alternative A, Option 2: P-V Curve & Shaft Power: Duty III : 45F/60%

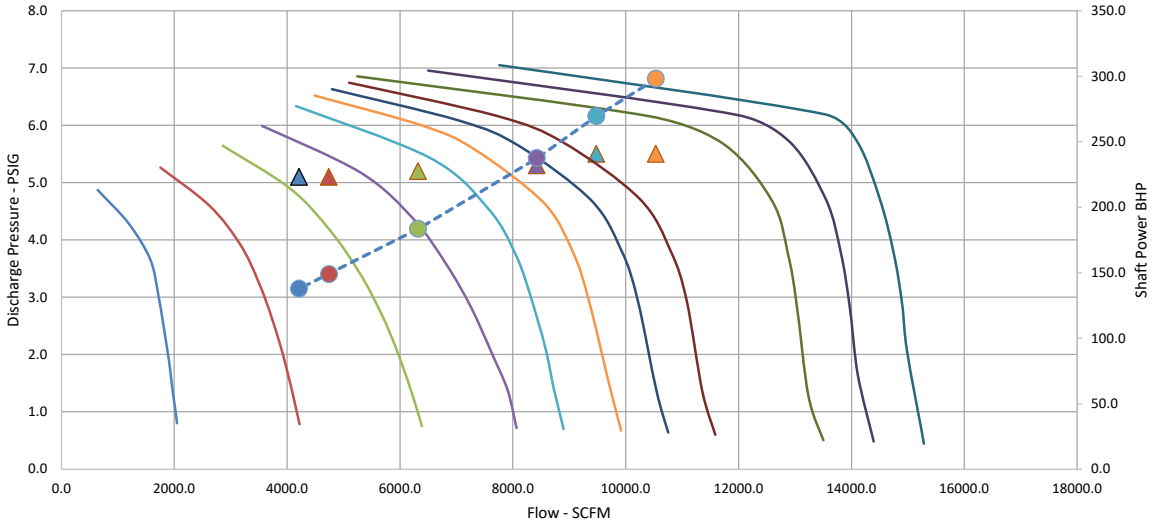

Lone Star Blower

GL SERIES – GEARED TURBO PERFORMANCE CURVE

Project:	City of Surprise
Project Ref:	Alternative A, Option 2
Engineer:	Water Works
Date:	10/2/22 5:22 PM

Technology:	Geared Turbo
Selected Model:	GL10

	Units			Alt Flow		Alt Flow		Alt Flow		Alt Flow		Alt Flow		Alt Flow
Volume Flow at Inlet	ICFM			10,535.3		9,481.8		8,428.3		6,321.2		4,740.9		4,214.1
Specified Volume	Delivered SCFM			10,533		9,480		8,427		6,320		4,740		4,213
Capacity	%			100		90		80		60		45		40
Specified Flow defined at	*Pressure*	*14.696*	*PSIA*											
	Temperature	*68*	*°F*											
	Relative Humidity	*36*	*%*											
Inlet Temperature	°F			40		40		40		40		40		40
Relative Humidity	%			60		60		60		60		60		60
Barometric Pressure	PSIA			14.07		14.07		14.07		14.07		14.07		14.07
Inlet Pressure Losses	PSIG			0.20		0.20		0.20		0.20		0.20		0.20
Pressure at Inlet	PSIA			13.87		13.87		13.87		13.87		13.87		13.87
Pressure at Discharge	PSIG			5.50		5.50		5.30		5.30		5.10		5.10
Total Delta Pressure	PSIG			5.70		5.70		5.50		5.50		5.30		5.30
Temperature at Discharge	°F			101.79		101.60		100.36		101.24		103.97		105.67
Maximum Rise to Surge	PSIG			1.64										
Blower Speed	RPM			7488										
Gearbox Input Shaft Power	HP			296.91		268.36		236.15		184.25		148.54		137.24

City of Surprise - Alternative A, Option 2: P-V Curve & Shaft Power: Duty II : 40F/60%

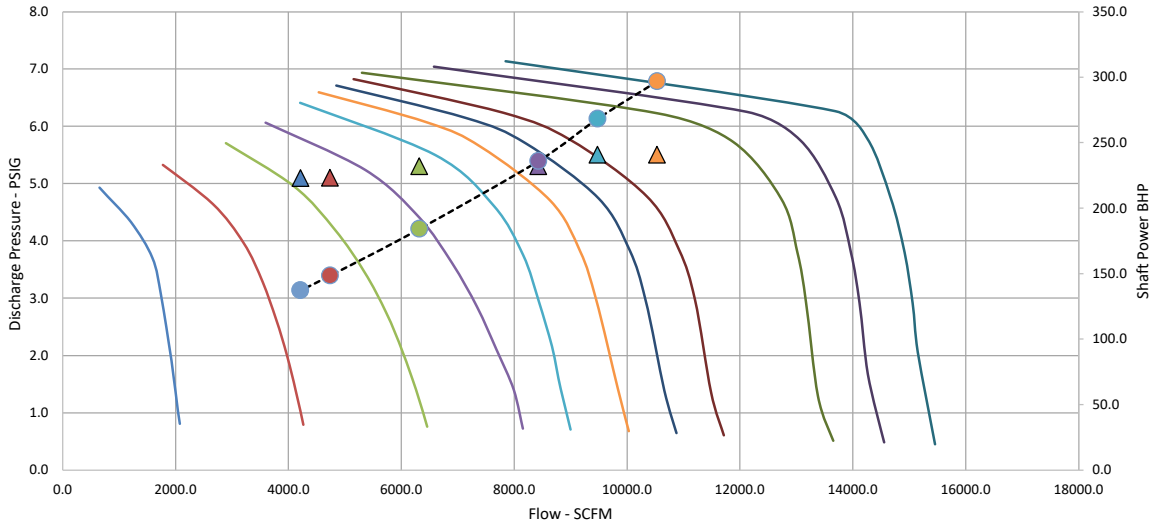

Lone Star Blower

GL SERIES – GEARED TURBO PERFORMANCE CURVE

Project:	City of Surprise
Project Ref:	Alternative A, Option 2
Engineer:	Water Works
Date:	10/2/22 5:22 PM

Technology:	Geared Turbo
Selected Model:	GL10

	Units	Alt Flow	Alt Flow	Alt Flow	Alt Flow	Alt Flow	Alt Flow
Volume Flow at Inlet	ICFM	10,517.2	9,465.4	8,413.7	6,310.3	4,732.7	4,206.9
Specified Volume	Delivered SCFM	10,533	9,480	8,427	6,320	4,740	4,213
Capacity	%	100	90	80	60	45	40
Specified Flow defined at	*Pressure* *14.7 PSIA*						
	Temperature *68 °F*						
	Relative Humidity *36 %*						
Inlet Temperature	°F	40	40	40	40	40	40
Relative Humidity	%	40	40	40	40	40	40
Barometric Pressure	PSIA	14.07	14.07	14.07	14.07	14.07	14.07
Inlet Pressure Losses	PSIG	0.20	0.20	0.20	0.20	0.20	0.20
Pressure at Inlet	PSIA	13.87	13.87	13.87	13.87	13.87	13.87
Pressure at Discharge	PSIG	5.50	5.50	5.30	5.20	5.10	5.10
Total Delta Pressure	PSIG	5.70	5.70	5.50	5.40	5.30	5.30
Temperature at Discharge	°F	101.83	101.64	100.39	100.85	104.03	105.73
Maximum Rise to Surge	PSIG	1.64					
Blower Speed	RPM	7488					
Gearbox Input Shaft Power	HP	296.54	268.03	235.84	182.87	148.41	137.11

City of Surprise - Alternative A, Option 2: P-V Curve & Shaft Power: Duty III : 40F/40%

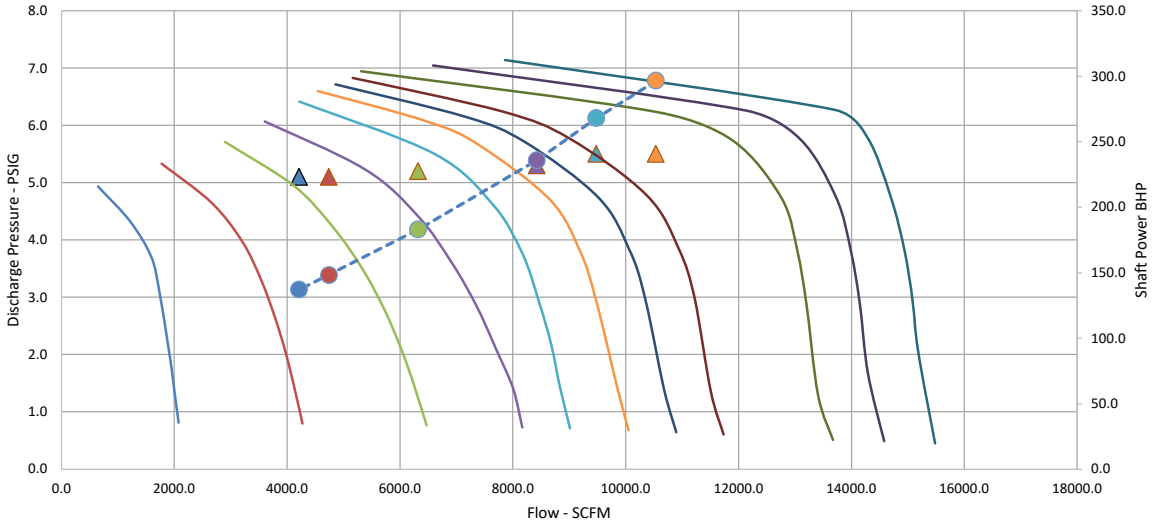

Lone Star Blower

GL SERIES – GEARED TURBO PERFORMANCE CURVE

Project:	City of Surprise
Project Ref:	Alternative A, Option 2
Engineer:	Water Works
Date:	10/2/22 5:25 PM

Technology:	Geared Turbo
Selected Model:	GL10

	Units	Alt Flow	Alt Flow	Alt Flow	Alt Flow	Alt Flow	Alt Flow
Volume Flow at Inlet	ICFM	12,064.4	10,857.9	9,651.5	7,238.6	5,429.0	4,825.8
Specified Volume	Delivered SCFM	10,533	9,480	8,427	6,320	4,740	4,213
Capacity	%	100	90	80	60	45	40
Specified Flow defined at	*Pressure* *14.7 PSIA*						
	Temperature *68 °F*						
	Relative Humidity *36 %*						
Inlet Temperature	°F	100	100	100	100	100	100
Relative Humidity	%	40	40	40	40	40	40
Barometric Pressure	PSIA	14.07	14.07	14.07	14.07	14.07	14.07
Inlet Pressure Losses	PSIG	0.20	0.20	0.20	0.20	0.20	0.20
Pressure at Inlet	PSIA	13.87	13.87	13.87	13.87	13.87	13.87
Pressure at Discharge	PSIG	5.50	5.50	5.30	5.20	5.10	5.10
Total Delta Pressure	PSIG	5.70	5.70	5.50	5.40	5.30	5.30
Temperature at Discharge	°F	167.00	166.01	163.46	163.66	166.01	167.09
Maximum Rise to Surge	PSIG	0.73					
Blower Speed	RPM	7488					
Gearbox Input Shaft Power	HP	328.18	293.18	253.26	195.25	156.15	142.93

City of Surprise - Alternative A, Option 2: P-V Curve & Shaft Power: Duty III : 100F/40%

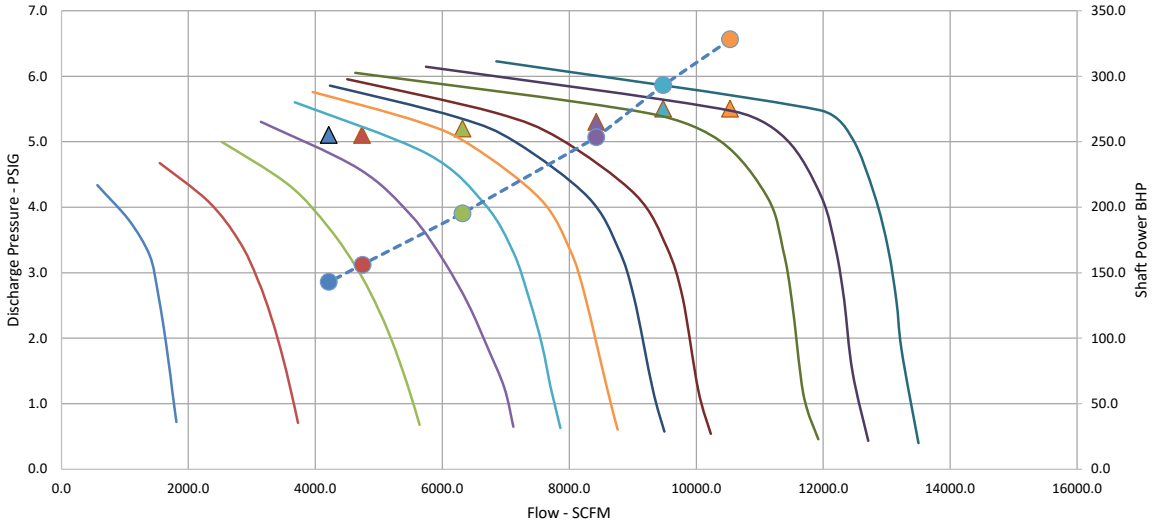

REVISION HISTORY			
REV	DESCRIPTION	DATE	APPROVED
1	AIR OUTLET VERTICALLY UP	5/27/2016	
2	RENAMED DWG FROM GL10-WX-03 TO GL10-WX-01, CONVERTED FROM mm TO INCHES	7/12/2016	

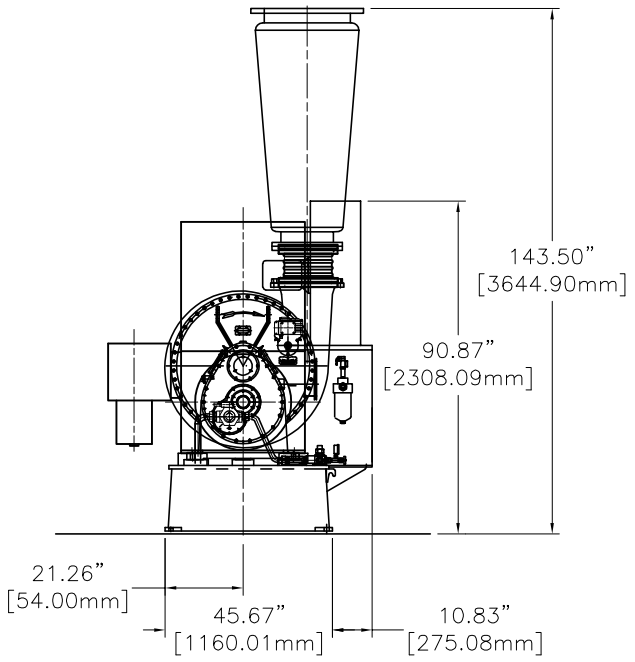

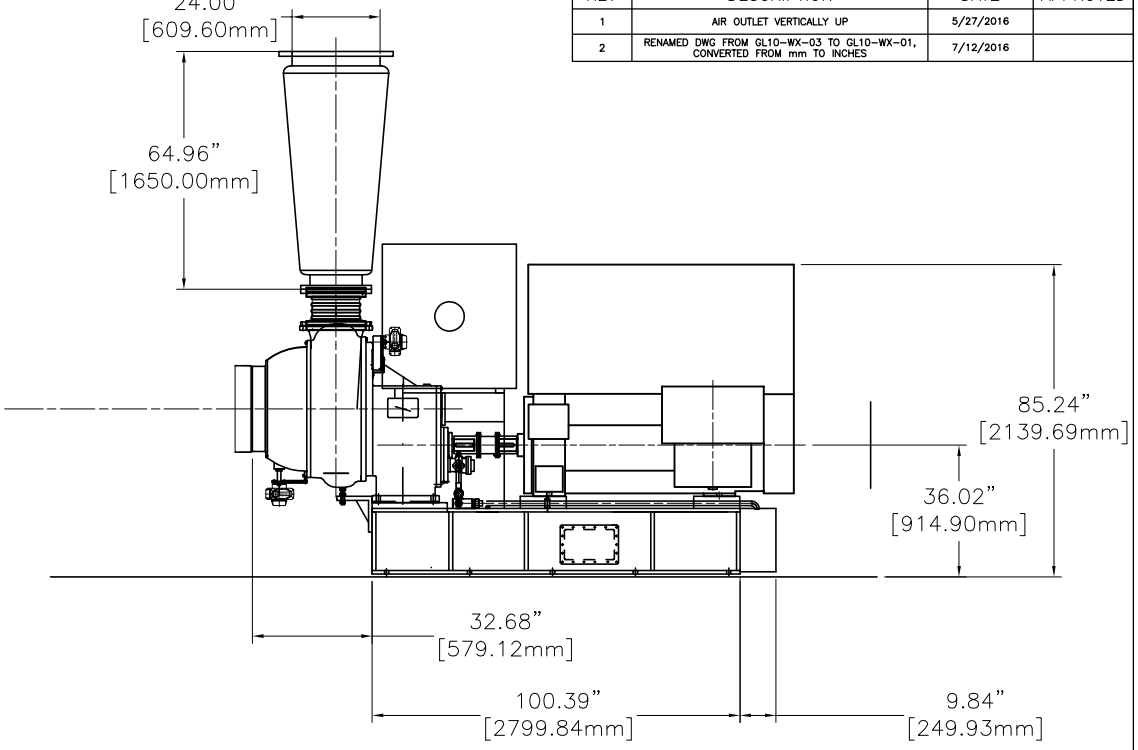

N
D r r d d r
r
E d r d

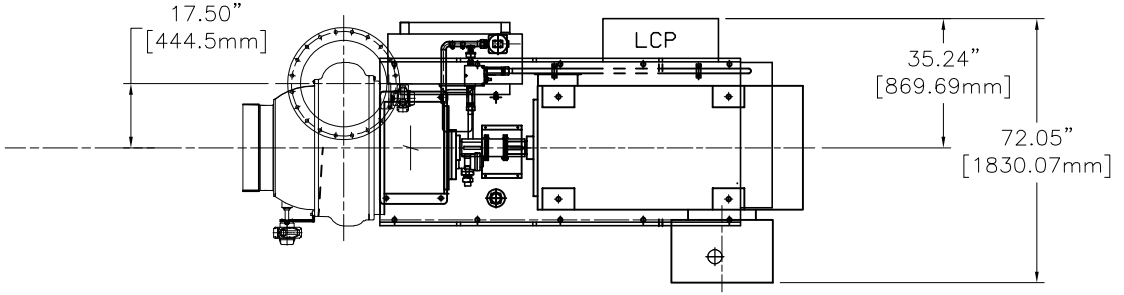

DRAWING IS FOR REFERENCE ONLY UNLESS SPECIFIED AS RELEASED.

APPROVALS		
DRAWN	BW	07/012/2016
CHECK		
ENGINEER		
MANUFACTURING		
CONTROL		
APPROVED		

THIRD ANGLE PROJECTION

LONE STAR BLOWER

TITLE
GL-10 GEARED TURBO
GENERAL ASSEMBLY 24" CONE

SIZE	CAGE CODE	DWG NUMBER	REV
A	-	GL10-WX-01	02

SCALE

SHEET 1 OF 1

BILL OF MATERIALS			
ITEM NO.	PART NUMBER	QTY.	DESCRIPTION
1	N/A	1	BLOWER,
2	2000600001	1	PUMP, OIL, AUX, TOP-N350HVB, NIPPON
3	1000976003	2	ACTUATOR, GUIDE VANE, 110 V, RCEL-009L
4	TBD	1	SKID
5	TBD	1	MOTOR, ELECTRIC
6	TBD	1	COUPLING, DISC, XTSR71-1088, REXNORD
7	2000600056	8	ISOLATOR, GL, VIBRATION, ASMR-1E-1400
8	2000600014	3	MAGNET, GL, OIL TANK, CERAMIC, 99N005
9	2000300030	1	FILL CAP, GL, SKID MAIN OIL CIRCUIT, LENZ, FCS-557
10	2002000009	1	AUX PUMP SUB ASSY(LESS PUMP & MOTOR), GL1-GL20
11	1000900017	1	PUMP MOTOR, GL, 1LE1001-1AB42, SIEMENS
12	2002000000	1	ACTIVE DEMISTER SUB ASSY (LESS CHIMNEY), GL1-GL20
13	2000600088	1	DEMISTER CHIMNEY, ACTIVE, GL, 10.75", SKID
14	2000600036	1	PUMP, OIL, MECHANICAL, TOP-N340HVB, NIPPON
15	2000600002	1	FILTER, LF330, SKID
16	2000608081	1	BASE, GL8, GUARD, DISC
17	2000608082	1	GUARD, GL8, COUPLING, DISC
18	2000608083	1	FILTER MOUNT BRACKET, GL8
19	TBD	1	OIL COOLER, GL, WATER,
20	2000600007	1	OIL HEATER, 480V, SRY6-5
21	TBD	1	MOUNT, LCP
22	1000976067	1	TEMP PROBE, RTD, 6", 1/4" MNPT, -200/600°C, TH11-F2CAB31AK1, ENDRESS HAUSER
23	1000976050	1	PRESSURE SENSOR, 1/4" MNPT, 0-30 PSIA, PTP31B-AA7M2KGFVUJ, ENDRESS HAUSER
24	1000976056	1	PRESSURE SENSOR, 1/4" MNPT, 0-30 PSIG, PTP31B-AA7M1KGFVUJ, ENDRESS HAUSER
25	1000976085	1	TEMP PROBE, RTD, 9", 1/4" MNPT, -50/200°C, TH11-F3CAB31AK1, ENDRESS HAUSER
26	1000976066	1	TEMP PROBE, RTD, 12", 1/4" MNPT, -50/200°C, TH11-F4CAB31AK1, ENDRESS HAUSER
27	1000976058	1	TEMP PROBE, RTD, 30mm, 1/4" MNPT, TTR31-A1C11UDA1AAB, ENDRESS HAUSER
28	1000976057	1	PRESSURE SWITCH, 1/4" MNPT, 0-60 PSIG, PTP31B-AA7M1MGFVUJ, ENDRESS HAUSER
29	1000976071	1	TRANSDUCER, PRESSURE, 1/8", 100 PSI, GC55-7-F01-42-CG-100, ASHCROFT
30	1000976073	1	SURGE SENSOR, IGC209, IFM
31	1000976025	1	ZERO SPEED SENSOR, TURCK BI 5-M18E-RP6X-H1143, GEARBOX
32	1000976097	2	PROXIMITY PROBE, M10 x 1, 200mm, 1 METER ARMORED CABLE, WL-142K05T-M200202/NB1, SHINKAWA
33	1000976096	1	PROXIMITY PROBE, M10 x 1, 120mm, 1 METER ARMORED CABLE, WL-142K05T-M200122/NB1, SHINKAWA
34	1000976098	3	EXTENSION CABLE, ARMORED, 4 METER, WW-142KT-1/NB1, SHINKAWA
35	1000976076	4	INSTRUMENT CABLE, M12, 90 DEGREE, 10 METER, EVC009, IFM
36	1000976042	1	INSTRUMENT CABLE, M12, STRAIGHT, 10 METER, EVC003, IFM
37	1000976035	1	CURRENT TRANSMITTER, 0-300 AMP, H221, HAWKEYE
38	2000600009	1	LEVEL GAUGE, GL, OIL TANK, 1111K28, 1/2" MNPTF
39	1000976033	1	DP TRANSMITTER, AIR FILTER, 0-5 IN WC, MS2-W102-LCD, DWYER
40	2002008001	1	ASSEMBLY, SKID MAIN OIL CIRCUIT, GL8-20 , LOCAL AIR COOLED
41	N/A	1	FLEXIBLE CONNECTOR
42	N/A	1	DISCHARGED CONE
43	N/A	1	LCP
44	N/A	1	INLET FILTER

PART #	MATERIAL SPECIFICATION	WEIGHT (lb)
2001200018		

N□□□□□
□□ S□□ □□□dr□□ □□□ □r □□□r□ □□□□ □□□□
□□ □□□□□□□r □□□□□ □□□ □□□□ □□□□□□□□d□d□□□□□ □ □r r□□□r□□□ □□□□

REVISION HISTORY				
REFERENCE DOC	REV	DESCRIPTION	DATE	APPROVED
	0			

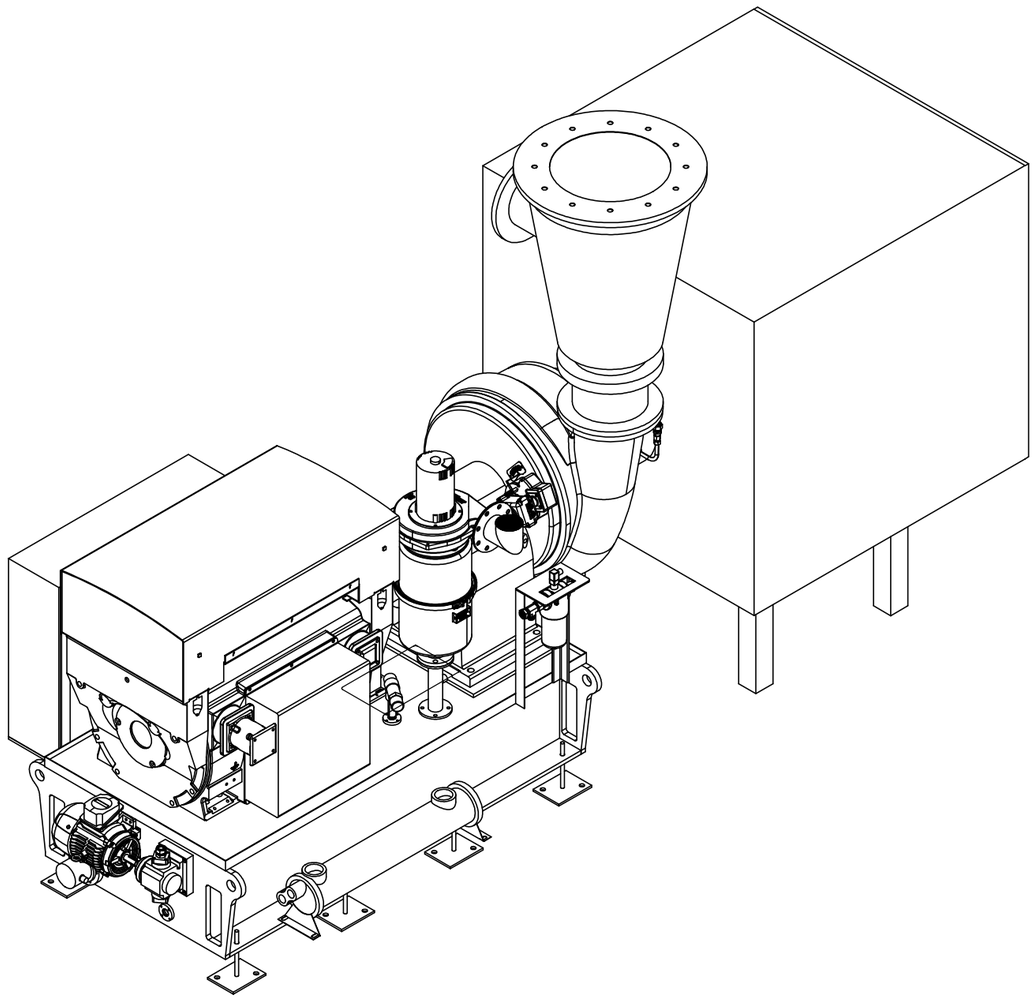

INTERPET ALL GEOMETRIC DIMENSIONING AND TOLERANCING TO ASME Y14.5	DRAWING IS FOR REFERENCE ONLY UNLESS SPECIFIED AS APPROVED	LONE STAR
ALL DIMENSIONS ARE IN INCHES UNLESS OTHERWISE SPECIFIED	THE INFORMATION CONTAINED IN THIS DRAWING IS THE SOLE PROPERTY OF LONE STAR BLOWER. ANY REPRODUCTION IN PART OR AS A WHOLE WITHOUT THE WRITTEN PERMISSION OF LONE STAR BLOWER IS PROHIBITED.	GENERAL ARRANGEMENT, 5010/5011, LOCAL WAT COOLED, W/ MOUNTED LCP
STANDARD TOLERANCES .X ±.015 .XX ±.010 .XXX ±.005 X/X ±1/16 ANGLES ± 1°	DRAWN BY TS / DATE 09/20/2022 CHECKED BY / DATE APPROVED BY / DATE	SIZE B / DWG. NO. 2008000261 / REV 0
REMOVE BURRS AND BREAK ALL SHARP EDGES MACHINED SURFACES 125	THIRD ANGLE PROJECTION	SCALE: 1:25 / DO NOT SCALE / SHEET 1 OF 4

REVISION HISTORY				
REFERENCE DOC	REV	DESCRIPTION	DATE	APPROVED
	0			

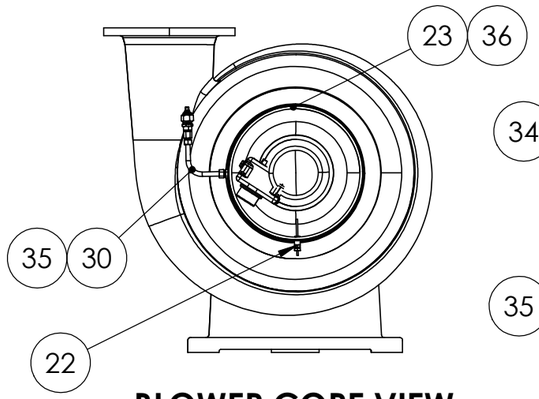

BLOWER CORE VIEW

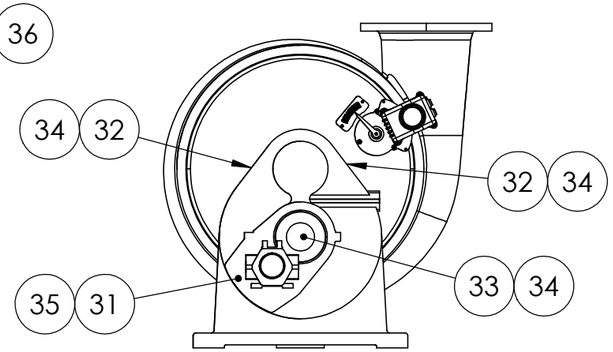

GEARBOX CORE VIEW

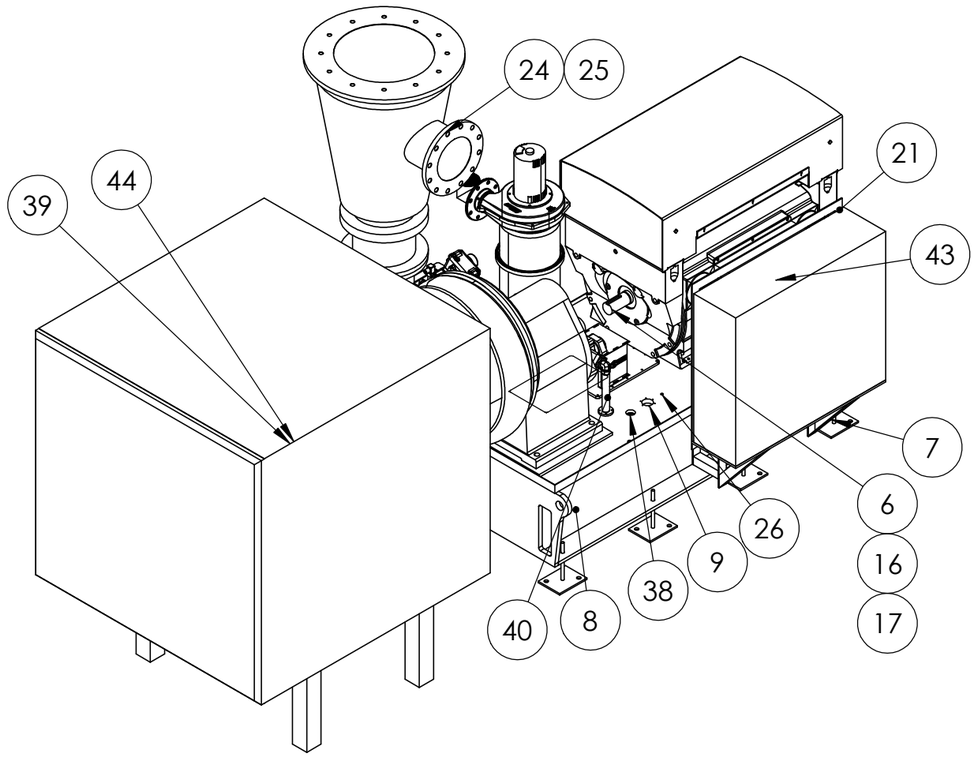

TOP BLOWER SIDE ISO VIEW

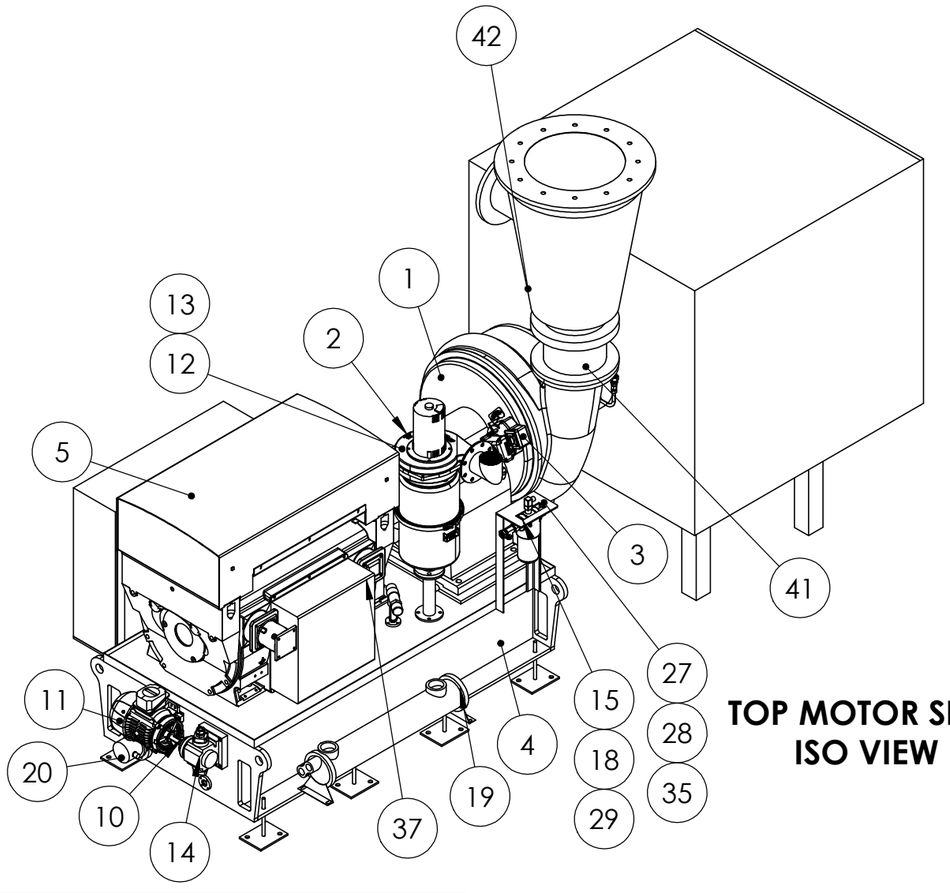

TOP MOTOR SIDE ISO VIEW

N
S dr r

PART #	MATERIAL SPECIFICATION	WEIGHT (lb)
2001200018		

INTERPET ALL GEOMETRIC DIMENSIONING AND TOLERANCING TO ASME Y14.5	DRAWING IS FOR REFERENCE ONLY UNLESS SPECIFIED AS APPROVED	LONE STAR
ALL DIMENSIONS ARE IN INCHES UNLESS OTHERWISE SPECIFIED	THE INFORMATION CONTAINED IN THIS DRAWING IS THE SOLE PROPERTY OF LONE STAR BLOWER. ANY REPRODUCTION IN PART OR AS A WHOLE WITHOUT THE WRITTEN PERMISSION OF LONE STAR BLOWER IS PROHIBITED.	GENERAL ARRANGEMENT, GL8, 5010/5011, LOCAL WATER COOLED, W/ MOUNTED LCP
STANDARD TOLERANCES .X ±.015 .XX ±.010 .XXX ±.005 X/X ±1/16 ANGLES ± 1°	DRAWN BY TS — DATE 09/20/2022 CHECKED BY — DATE APPROVED BY — DATE	SIZE B — DWG. NO. 2008000261 — REV 0
REMOVE BURRS AND BREAK ALL SHARP EDGES MACHINED SURFACES 125	THIRD ANGLE PROJECTION	SCALE: 1:30 — DO NOT SCALE — SHEET 2 OF 4

Alternative B Proposal

City of Surprise SPA1 WRF Capacity Expansion WWE Project 20-018

Single Stage Centrifugal Blowers

SUBMITTED BY:

Lone Star Blower
Amber Roberts
Ph: 832-982-8877
aroberts@lonestarblower.com
8883 West Monroe Road
Houston, TX 77061

REPRESENTED BY:

MISCOwater
Dave Redman
Ph: 480-415-7303
dredman@miscowater.com
4670 South Ash Ave, #103
Tempe, AZ 85282

Lone Star Blower, Inc.

October 5, 2022

TABLE OF CONTENTS

SECTION	PROPOSAL DOCUMENTATION
A	**Alternative B - Proposal (Option 1 & 2)**
	1. Pricing Summary 2. Scope of Supply 3. Comments and Clarifications 4. Warranty Statement 5. Terms □ Conditions
B	**Alternative B -Technical Data (Option 1 & 2)**
	1. Option 1 a. Blower General Data Sheet b. Blower Performance Data and Curves c. Blower Preliminary Dimensional Drawings 2. Option 2 a. Blower General Data Sheet b. Blower Performance Data and Curves c. Blower Preliminary Dimensional Drawings

TAB A

Alternative B – Proposal (Option 1 & 2)

Includes:
1. Pricing Summary 2. Scope of Supply 3. Comments and Clarifications 4. Warranty Statement 5. Terms□ Conditions

Lone Star Blower, Inc.
8883 West Monroe Road
Houston, TX 77061
PH: 832-532-3112
FAX: 832-532-3115

SINGLE STAGE CENTRIFUGAL BLOWER PROPOSAL

Alternative B - Option 1 & 2

PROJECT:	City of Surprise – SPA1 WRF Capacity Expansion		
REPRESENTATIVE:	MISCOwater		
DATE:	October 4, 2022	QUOTE NO.:	ALR630_Alt.B
EQUIPMENT:	Single Stage Centrifugal Air Blowers		

SUPPLIER:	LONE STAR BLOWER
SPECIFICATION:	11629/11371
VALIDITY:	90 Days
SUBMITTAL**:**	8-10 Weeks after acceptance of order.
DELIVERY:	Estimated 32-36 from receipt of submittal approval. Due to supply chain challenges, schedule subject to change and will be confirmed upon submittal approval.

LONE STAR BLOWER

8883 West Monroe Road
Houston, Texas 77061

TEL: 832-532-3112
FAX: 832-532-3115

1. PRICING SUMMARY – ALTERNATIVE B

DESCRIPTION	QTY	Option 1 IGV and VFD	Option 2 IGV and DV
GL Series Blower, Model GL8	5	Included	Included
Blower Accessory Package	5	Included	Included
Blower Instrumentation Package	5	Included	Included
Local Control Panel	5	Included	Included
Reduced Voltage Soft Starter	5	N/A	Included
Variable Frequency Drive (VFD)	5	Included	N/A
Performance Testing	Lot	Included	Included
Packaging & Freight	Lot	Included	Included
Field/Startup Services	Lot	Included	Included
Spare Parts paragraph 2.11	Lot	Included	Included
	Grand Total	$1,437,430	$1,372,610

Optional Adds/Deducts – The following deducts and adds are offered. Applies to both Option 1 and 2.

Add/ Deduct	Spec Reference	Description	Qty	Total for All Units
ADD	2.6.B & C	Provide stainless steel body blow-off silencer and discharge cone in lieu of industry standard carbon steel. For air service applications, carbon steel or ductile iron material for these components are industry standards and meet technical requirements for this application and environmental conditions. Due to supply chain challenges, lead times for stainless steel is very volatile and could impact the delivery.	**5**	**Blow-off Silencer $16,090** **Discharge Cone $18,275**
DEDUCT	2.8.A	Provide 10” OIT in Lieu of 15” Typical OIT size for the LCPs is 10”. Providing specified size will require a larger overall LCP enclosure and provide minimal increased viewing benefits.	**5**	**($17,087)**
ADD	2.8.B	Provide MCP as referenced It is unclear if this is by others or to be provided by blower manufacturer. If required, Lone Star Blower can provide as specified.	**1**	**$29,955**
DEDUCT	2.11.A	**Provide only consumable spare parts (oil filters and oil breathers) in lieu of non-consumables listed (i.e. bearings, seals, actuators, etc.)** All non-consumable parts listed are not parts that require regular maintenance or replacement. LSB stocks full sets of blower spare parts at our Houston, TX factory, and can have parts readily available in the event they are needed on site.	**Lot**	**($16,675)**

PRICE: The price quoted is for all items purchased at one time. Partial orders may be subject to a price adjustment.

PAYMENT TERMS: 25% upon Approval of Submittals; 70% upon delivery or readiness for shipping; 5% upon successful startup or latest 8 weeks after delivery. Terms subject to credit approval.

WARRANTY: A 24-month warranty will begin upon successful completion of startup and certification for full-scale operation by Lone Star Blower, or 18 months from shipment, whichever occurs first. Under no circumstances will the warranty begin upon “beneficial use”, completion of the project, or acceptance of the equipment as determined by the engineer or end user. Any and all warranty terms and conditions detailed in the proposal herein shall supersede and/or supplement the warranty language denoted in the Lone Star Blower terms and conditions.

TERMS & CONDITIONS: Included is a copy of our standard terms & conditions (see Proposal Tab A.5)

2. SCOPE OF SUPPLY – ALTERNATIVE B

APPLICATION - AERATION	Option 1	Option 2
BLOWER MODEL	GL8	GL8
CONFIGURATION	IGV and VFD	IGV and DV
QTY	Five (5)	Five (5)
DESIGN FLOW	7,900 SCFM	7,900 SCFM
DESIGN PRESSURE	5.5 PSIG	5.5 PSIG
DESIGN TEMPERATURE	100°F	100°F
DESIGN RH%	40%	40%
RISE TO SURGE	> 0.5 PSIG	> 0.5 PSIG
MOTOR RATING, HP	300	300
BLOWER TURNDOWN	Minimum 40% of capacity	Minimum 40% of capacity

BLOWER DESIGN

The GL Series Integrally Geared Turbo Centrifugal blower package utilizes inlet and discharge guide vanes for flow modulation and efficiency optimization. Our blowers are built in compliance with API 672 with tilting pad sleeve bearings for maximum life and reliability. All components of the Lone Star Blower package are made from the highest quality raw materials and all critical components of the blower, including all moving parts (impellers, gears and shafts) are manufactured in the USA with state-of-the-art machines for strict quality control throughout the process. Our blower features include

- 3 to 35 PSI Range
- 1,000 to 70,000 CFM
- 100% to 40% Turndown
- Sleeve Bearing Design
- Oil Free Compression
- High Rise to Surge, Low Maintenance & High Reliability

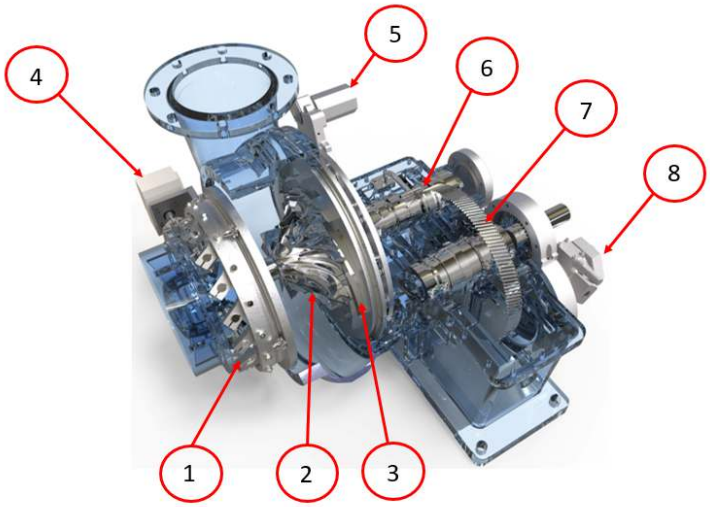

1. Inlet Guide Vanes (IGV) 316 SS
2. High Efficiency Impeller
3. Variable Vane Diffusers (VD) 316 SS
4. IGV Actuator
5. VD Actuator
6. Radial Tilt Pad Sleeve Bearing Design
7. Slow Speed Bull Gear
8. Mechanical Oil Pump

TYPICAL LAYOUT*

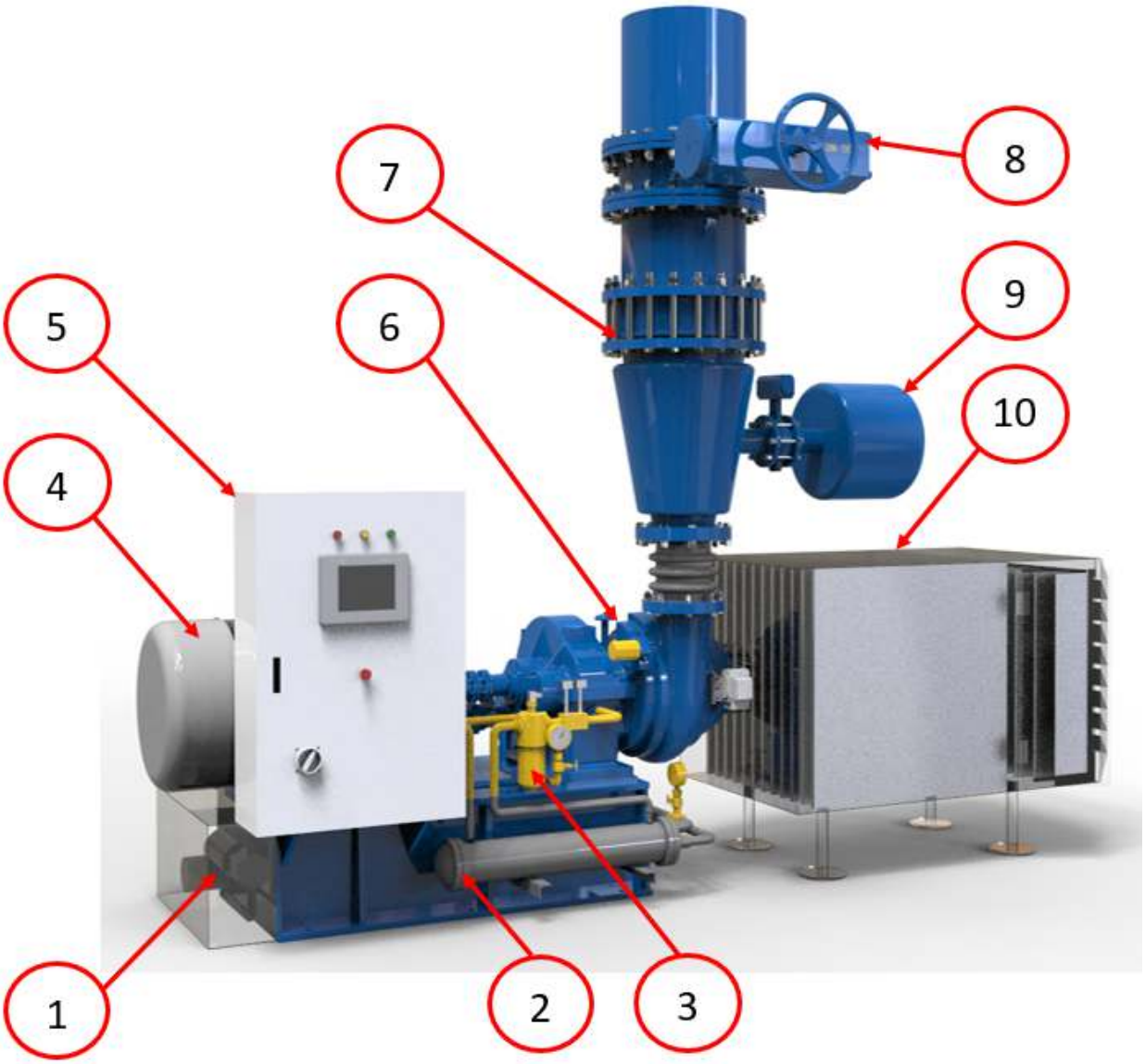

1. Auxiliary Oil Pump
2. Oil Cooler
3. Oil Filter
4. Main Motor
5. LCP
6. Blower
7. Check Valve
8. Isolation Valve
9. Blow Off Valve & Silencer
10. Inlet Filter/Silencer

* Above layout drawing is reference only and does not depict the actual layout for this proposed project. Detailed submittal drawings will be issued upon an order being placed.

Lone Star Geared Turbo Blower, accessories and controls with variable inlet and discharge guide vanes for efficiency optimization and minimized power consumption. This proposal is offered in accordance with Section 11629/11371 and associated Procurement Documents.

Standard Major Skid Components:

Lone Star GL8 Series Blower Package consisting of:

- Ductile Iron Volute
- Cast Iron Gearbox Casing
- Aluminum Alloy Impeller, **Anodized**
- 316SS Diffuser (as applicable) & Guide Vanes and Diffuser Backplate
- Alloy Steel with White PAP Alloy – Force Lubricated **Journal** Style Bearings
- High Tensile Alloy Steel Gears & Shafts
- Pressurized Oil Lubrication System
    - Oil pumps, Oil filter, water cooler, oil reservoir (integral to blower base) oil heater, temperature regulator and solenoid valve stainless steel piping, and demister
- IP67 IGV & VD Actuators (as applicable)
- NEMA 12 Blower Termination Boxes

Star Premium Structural Steel Skid/Base consisting of:

- Heavy Duty Steel Construction
- Oil Reservoir
- Lifting Eyes on Corners
- Premium Coupling
- OSHA Coupling Guard
- Vibration Isolators (Seismic Rated)

300 Premium Efficient Motor; DP Enclosure, 460/3/60, 1.15 S.F., 3,600RPM

- 100 ohm Platinum Bearing and Winding RTDs
- Vibration Sensors
- 120V Space Heater, 50°C ambient temperature rating
- Inverter Duty Rated (Option 1)Suitable for Reduced Voltage Solid
- State Start by RVSS (Option 2)
- In accordance with 11629, 2.3

Technical Offer – Blower Accessory Package	
Customer	City of Surprise – SPA1 WRF Capacity Expansion
Date	October 4, 2022

Lone Star Blower offers all required accessories for a complete system.

Inlet Accessories (Shipped Loose; for each blower, for installation by Customer):
Inlet Expansion Joint, EPDM Material

Discharge Accessories (Shipped Loose; for each blower, for installation by Customer):
Discharge Expansion Joint
Discharge Silencing Cone, Carbon Steel
18", Discharge Check Valve, Cast Iron Body, Wafer Style, w/EPDM Seat
8", Blow-Off Valve, Wafer Style, Cast Iron Body w/EPDM Seat w/ Electrical Actuator
18", Discharge Isolation Valve, Cast Iron Body, w/EPDM Seat w/ Electric Actuator
8", Blow-Off Silencer, Inline Type, Carbon Steel

Technical Offer – Blower Instrumentation Package	
Customer	City of Surprise – SPA1 WRF Capacity Expansion
Date	October 4, 2022

Lone Star Blower offers Premium Instrumentation to protect your new equipment. It is recommended to monitor and protect your centrifugal blower with temperature, pressure and vibration protection. By monitoring your equipment, you can conduct preventative maintenance by trending vibration and temperature levels of your blower bearings. Instrumentation communicates via 4-20 mA to easily monitor with DCS, M□□□SCADA or Local Control panel.

Blower Instrumentation (skid mounted & pre-wired to the LCP)

Motor bearing & winding RTD's
Oil temperature gauge
Inlet temperature gauge
Oil pressure transmitter
Blower bearing RTDs
Surge switch
Oil reservoir temperature transmitter
Oil pressure switch
Oil filter differential pressure indicator gauge
Discharge Temperature Transmitter
Inlet air temperature transmitter
Blower & motor vibration monitors
Reverse rotation switch
Differential pressure transmitter
Oil pressure gauge

Technical Offer – Local Control Panel	
Customer	City of Surprise – SPA1 WRF Capacity Expansion
Date	October 4, 2022

Lone Star Blower offers a complete line of advanced sLOC-GL smart local control panels (LCPs) to suit every application, process & environment. These smart panels in conjunction with our system monitoring package will protect and extend the life of the blower by operating the equipment at peak efficiencies and alarming and then shutting down the blower if an unsafe operating condition exist. Each blower includes the following control panel:

sLOC-GL:

NEMA 12 Skid Mounted PLC based Local Control Panel (LCP), includes the following minimum features:

- Allen Bradley CompactLogix PLC
- **15”** Operator Interface Terminal (OIT), Allen Bradley PanelView
- Certified per UL 508A
  120V/60Hz/1ph, 30 Amp power supply (480V power supply available, if required)
- Emergency Stop Button

Protection/Control and monitoring for the following are included:

- Blower operating status (Start/Stop)
- Local control
- Remote/Auto control
- Blower failure/shutdown alarm
- Blow-off valve control (open/close)
- Discharge Valve control (open/close)
- Inlet guide vanes position and control
- Motor Speed via VFD (Option 1)
- Variable diffuser vanes position and control (Option 2)
- Oil low pressure alarm
- Oil high temperature alarm
- Surge control alarm
- Inlet air temperature alarm
- Inlet air filter high differential pressure alarm
- High vibration indicator
- Motor Amps
- General alarm indicator
- Global alarm reset
- Service/Normal/Test Models

Not all monitoring and control functions shown

Technical Offer – Drives	
Customer	City of Surprise – SPA1 WRF Capacity Expansion
Date	October 4, 2022

Lone Star Blower provides a full line of VFD's and Starter Panels for starting and speed control:

Option 1 includes:
Variable Frequency Driver (Shipped Loose; for each blower, installation by Customer):
300 HP, High efficiency, 6-pulse Drive, Standalone NEMA Enclosure, Positive Pressure Blown & Filtered including:

- 480VAC
- Rotary Disconnect w/Fuses
- Input Reactor
- E-Stop, Power light, Running Light
- Drive Mounted LCD Keypad
- EtherNet

Option 2, includes
RVSS Soft Starter (Shipped Loose; for each blower, for installation by Customer):
3□0 HP, Standalone NEMA Enclosure including:

- Circuit Breaker Disconnect w/Through-the-door Operator
- 480V-120V Fused Control Transformer
- Soft Starter with Built-in Bypass Contactor and Overload Relay
- Start/Stop Pushbuttons
- Red Run Light
- Amber Fault Light

Technical Offer – Product Data	
Customer	City of Surprise – SPA1 WRF Capacity Expansion
Date	October 4, 2022

Lone Star Blower has a fully trained and experienced Project Management and Engineering Team. Upon notification of selection, a dedicated Project Team will be assigned and provide the following support services and product data as specified.

- Seismic Calculations and Drawings, stamped by Registered Arizona PE, as required
- Submittal and O&M Documentation and Engineering Support Throughout Project Execution and Warranty
- Coordination Meeting

Technical Offer – Testing	
Customer	City of Surprise – SPA1 WRF Capacity Expansion
Date	October 4, 2022

Lone Star Blower performs mechanical testing under full load for all new blowers. The standard mechanical test includes balance report and vibration analysis. In addition to mechanical testing, the following tests are included:

- Blower ASME PTC10 Performance Test
- LCP FAT Test
- Motor Routine test

Technical Offer – Packaging & Freight	
Customer	City of Surprise – SPA1 WRF Capacity Expansion
Date	October 4, 2022

Lone Star Blower ships from our Houston, Texas, USA factory. Packaging, Handling and Freight DAP jobsite (INCOTERM® 2010) is included. Equipment will be shrink wrapped & labeled.

Technical Offer – Field/Startup Services	
Customer	City of Surprise – SPA1 WRF Capacity Expansion
Date	October 4, 2022

Lone Star Blower has a fully trained and experienced US based service group which will perform installation checking, functional testing, equipment commissioning and training. Includes the following onsite services in accordance with 11629/11371, 3.4 & 3.5:

- Twenty (20), 8-hr days onsite services (minimum of four (4) trips) to provide
  - Installation Support/Inspection
  - Commissioning and Initial Operation Support
  - Operation and Maintenance Training
  - System Operation Demonstration

Additional service is available per Lone Star's published labor rate sheet. Advance notification of 15 working days is required for scheduling.

Technical Offer – Spare Parts	
Customer	City of Surprise – SPA1 WRF Capacity Expansion
Date	October 4, 2022

Lone Star Blower stocks parts locally in our Houston, TX Factory. The following spare parts are included:

- One (1) complete set of bearings for the blowers
- One (1) sets of all gaskets and seals for blowers
- One (1) inlet guide vane actuator
- One (1) variable diffuser vane actuator (Option 2)
- Five (5) sets oil filter cartridges (one per blower)
- Five (5) sets oil breather cartridges (one per blower)
- Five(5) complete set of motor bearings (one per motor)
- Five (5) set of all motor gaskets and seals (one per motor)
- Five (5) spare flexible coupling for electric drive and blower
- Two (2) sets of special tools

3. COMMENTS AND CLARIFICATIONS

1. **ITEMS NOT INCLUDED:** Inlet filter/silencer, MCP, Fittings, Piping Hardware, Elbows, Existing Equipment Removal and Loading, Equipment Installation, Equipment Wiring, Taxes and anything not listed in the above scope of supply shall be provided by others.

2. 11629/11371-7, 2.2.F.7 - Proposal includes a water cooled oil system as shown on drawing N-40-101 & 2. If air cooled system is preferred, it can be provided in lieu of water cooled system for no additional costs.

3. 11629/11371-13, B.1.e and C – Carbon steel bodies for these components are included. For air service applications, carbon steel or ductile iron material for these components are industry standards and meet technical requirements for this application and environmental conditions. In addition, due to supply chain challenges, lead times for stainless steel has been very volatile, and could impact delivery schedule. See pricing summary of this proposal for add to provide stainless steel construction.

4. 11629/11371-15, 2.8.A.7 - Typical OIT size for the LCPs is 10". Providing specified 15" size will require a larger overall LCP enclosure and provide minimal increased viewing benefits. See pricing summary of this proposal for deduct to provide 10" OIT in lieu of 15".

5. 11629/11371-18, 2.8.B - It is unclear if the referenced MCP is a common Plant MCP that is being provided by others or a stand-alone blower MCP that is to be provided by blower manufacturer. Our proposal does not include a MCP. If required, Lone Star Blower can provide this item, see pricing summary of this proposal for adder.

6. 11629/11371-19, 2.11 - All non-consumable parts listed (blower bearings & seals, guide vane actuators, motor couplings) are not parts that require regular maintenance or replacement. LSB stocks full sets of blower spare parts at our Houston, TX factory, and can have parts readily available in the event they are needed on site. See pricing summary of this proposal for deduct to provide only consumable parts.

7. DWG. M-40-201 – Inlet filter/silencers are not included in this offer. Based on drawings included with RFP, it is inferred that these are part of the inlet plenum and provided by others. Please contact LSB if an adder for the inlet filer/silencer is needed.

8. 11629/11371-10, 2.3 – For Option 1 a standalone VFD panel has been included for each blower for control and starting. For Option 2 a standalone RVSS panel is included for each blower for reduced voltage starting. If these components are to be provided by others or mounted in a common MCC, please advise, and deduct options will be provided.

9. 11629/11371 & 16269 – For Option 1, a Contactor Bypass has not been included with the VFD as it is not applicable nor recommended for use with the proposed blowers.

Office: + 832 532 3112
Fax: + 832 532 3115
www.lonestarblower.com

□□□ ARRANT□ STATEMENT

The following is a summary of the warranties included in our offer and those offered above those specified.

Blower Complete Package Two (2)-Year Warranty: LONE STAR BLOWER (LSB) is including a complete **Two (2)-year** warranty on the proposed blower (GL-Series) packages from start-up or 30 months from delivery, whichever occurs first. LSB warrants the GL-Series Geared Turbo product supplied to be free from defects in material and/or workmanship under normal use and service. LSB warrants that all equipment, materials, and work will conform with the specifications, will be new, current and sufficient for application and operating conditions specified.

This warranty applies to all standard equipment supplied by the Lone Star Blower. Lone Star Blower will repair or replace any defective part or parts, at no charge.

Warranties Above Those Specified, Included in Offer

In addition to the Two (2)-year complete package warranty above, LSB is including a **Ten (10)-year** blower core warranty, as detailed below:

> **Blower Core Ten (10)-Year Warranty:** A **Ten (10)-year** warranty will begin upon commissioning of the equipment or 60 days from shipment, whichever occurs first, for the blower core component. Warranty is based on normal operating conditions, environmental conditions specified and following of recommended O&M procedures.

Office: + 832 532 3112
Fax: + 832 532 3115
www.lonestarblower.com

□□TERMS □ □□ND□T□□NS

Lone Star Blower, Inc

TERMS & CONDITIONS OF SALE (EQUIPMENT AND/OR SERVICE)

1. GENERAL: As used herein, "Seller" means Lone Star Blower "Purchaser" means the entity to which Seller's offer is made, or the entity purchasing Equipment and/or service from Seller. The term "Equipment" as used herein includes any and all products, equipment, parts, and accessories furnished by Seller to Purchaser. All offers and sales by Seller are expressly conditional upon these Terms and Conditions of Sale. Any terms or conditions in Purchaser's purchase order (or in any other Purchaser communication) which are different from or in addition to the terms and conditions contained in these Terms and Conditions of Sale are hereby objected to. All orders submitted to Seller are subject to approval by Seller's headquarters.

2. DELIVERY: The shipment/delivery period is an estimate only and commences after Seller's receipt of all necessary information, approvals, and signed submittals with release for manufacturing. In no event shall delivery be construed as falling within the meaning of "time is of the essence". Seller reserves the right to deliver in installments. Unless otherwise specified in Seller's quotation, delivery is F.O.B. Seller's manufacturing facility.

3. TITLE and RISK OF LOSS: Unless otherwise specified in Seller's written quotation, title and risk of loss or damage to the Equipment shall pass to Purchaser upon tender of delivery F.O.B. manufacturing facility. Notwithstanding the foregoing, a security interest in the Equipment or any replacement shall remain in Seller, regardless of mode of attachment to realty or other property, until full payment has been received by Seller. Purchaser agrees upon request to do all things and acts necessary to perfect and maintain said security interest and shall protect Seller's interest by adequately insuring the Equipment against loss or damage from any cause.

4. TAXES: Purchaser shall be responsible for applicable local, state and federal taxes which may be now or hereafter be applicable to, measured by, or imposed upon, or with respect to this transaction, the Equipment, its sale, its value or its use, or any services performed in connection therewith (except any taxes on Seller's income). If sales, use or other State or Municipal taxes in addition to any listed specifically as part of the stated purchase price, are imposed upon Seller, Purchaser agrees to pay the same or reimburse Seller upon demand. Seller will accept a valid exemption certificate from Purchaser, if applicable. If an exemption certificate previously accepted by Seller is not recognized by the governmental taxing authority involved, Purchaser agrees to promptly reimburse Seller for any taxes covered by such exemption certificate which Seller is required to pay.

5. PAYMENT: Unless specifically agreed otherwise in writing, payment is due in full within 30 days of the invoice date. Seller reserves the right to charge late fees on overdue amounts at a monthly rate of 1.5% (one and a half percent) or the rate permitted by law, whichever is lower. Purchaser shall have no right to set-off against any amounts which may become payable to Seller under this contract or otherwise, for amounts which Seller may allegedly or in fact owe Purchaser or any affiliate of Purchaser or assignee whether arising under this contract or otherwise. Any waiver by Seller of any lien or lien right shall be conditioned upon Purchaser's timely payment to Seller of all amounts due.

6. INSTALLATION: Unless Seller's written quotation specifies that Seller will perform installation of the Equipment, it is understood and agreed that Seller will not perform any installation of the Equipment.

7. START-UP, OTHER SERVICE: Any service (for example, Equipment start-up, if applicable) to be performed by Seller is specified in Seller's written quotation. Dates/time for the service is subject to scheduling and confirmation by Seller's service department. Seller's performance of service is subject to Seller's normal working hours (8:30 am to 5:00 pm, Monday through Friday excluding public holidays), unless expressly agreed otherwise. If any forklift, crane, and/or other lifting or rigging equipment or lighting equipment is necessary (as reasonably determined by Seller's service technician) for Seller to perform the service, Purchaser shall supply such equipment at its own expense together with sufficiently skilled and qualified labor in connection therewith, unless expressly agreed otherwise. If Purchaser requests Seller to comply with Purchaser's safety programs/procedures in connection with performing service at Purchaser's premises, Seller shall comply with such safety programs/procedures that have been provided in advance to Seller in writing with reasonable opportunity to review/implement, to the extent they are reasonable and applicable to the scope of Seller's activities at the premises.

8. INSURANCE: During the term of the Contract, Seller agrees to have the following insurance coverage:
a) Commercial General Liability insurance in an amount of $1,000,000 each occurrence for bodily injury and physical damage to tangible property, subject to an annual aggregate not to exceed $2,000,000;
b) Automobile Liability insurance in an amount of $1,000,000 combined single limit each occurrence;
c) Worker's Compensation insurance in accordance with applicable statutory law; and
d) Employer's Liability insurance in an amount of $1,000,000 for bodily injury each accident or disease.
If Seller will physically enter onto Purchaser's premises (or a third party's premises) in connection with the sale of the Equipment/ service, Seller agrees to, at Purchaser's reasonable request, provide an ACORD form of certificate confirming the above-stated insurance coverage.
Seller shall have no other insurance-related requirement, unless specifically agreed to in writing by an authorized manager of Seller in connection with the order.

9. RETURN POLICY: Shipping and handling charges are not refundable. Purchaser is responsible for the return shipping fee. All returned items are subject to a 30% restocking fee. Returned items must be in brand new condition with all packaging enclosed in the exact condition in which you received them. Special order or non-stock items will not be accepted for return/refund.

10. CANCELLATION: Each party has the right to cancel the order/contract in whole or in part in writing with immediate effect if the other party becomes insolvent, makes a general assignment for the benefit of creditors, suffers or permits the appointment of a receiver for its business or assets, becomes subject to any proceeding under any bankruptcy or insolvency law, or has wound up or liquidated (voluntarily or otherwise). In addition, each party has the right to cancel the order/contract or any part thereof if the other party fails, within 30 days after receipt of written notice from the non-breaching party specifying the material breach and intent to terminate, to commence and diligently pursue cure of the breach. Unless an order is cancelled by Purchaser in accordance with this paragraph, Purchaser shall pay Seller's cancellation charges if Purchaser cancels the order (including if Purchaser cancels the order for Purchaser's convenience). The cancellation charges shall be reasonable and may include (among other things) all costs and expenses incurred, and commitments made by Seller and a reasonable profit thereon. Notwithstanding anything set forth to the contrary, Seller may suspend Seller's performance or cancel the order/contract (or any part thereof) immediately if Purchaser fails to provide payment security (if applicable) or if Purchaser fails to make any payments when due.

11. WARRANTY: Seller hereby warrants to Purchaser that the Equipment manufactured or distributed by it and delivered hereunder will be free from defects in material and workmanship under proper use and service; this warranty shall expire one year from start-up or 18 months from the original shipment date from Seller's manufacturing facility whichever comes first. This warranty applies only to Equipment manufactured by Seller and does not cover motors, starters, electrical equipment or other components or accessories manufactured by others. Seller will repair or replace, F.O.B. its factory, any defective part or parts, at no charge, if promptly returned to it within the above-noted warranty period. This warranty extends only to the original purchaser of Equipment furnished hereunder and shall be void if the Equipment is repaired or tampered with in any manner other than by Seller's authorized service personnel. If Seller's inspection does not disclose a defect covered by the warranty, the Equipment will be returned to Purchaser at its expense or, if Purchaser elects, Seller will repair or replace the equipment and charge for such service at the regular rate.

Seller hereby warrants to Purchaser that all other Equipment manufactured by Seller and delivered hereunder will be free from defects in material and workmanship under proper use and service; this warranty shall expire one year from the original shipment date from Seller's manufacturing facility. This warranty applies only to Equipment manufactured by Seller and does not cover components or accessories outside of standard packaged equipment offered. Seller will repair or replace, F.O.B. its factory, any defective part or parts, at no charge, if promptly returned to it within the warranty period. This warranty extends only to the original purchaser of Equipment furnished hereunder and shall be void if the product is repaired or tampered with in any manner other than by Seller's authorized service personnel. If Seller's inspection does not disclose a defect covered by the warranty, the Equipment will be returned to Purchaser at its expense or, if Purchaser elects, Seller will repair or replace the Equipment and charge for such service at the regular rate.

Seller warrants to Purchaser that Equipment or parts thereof repaired or replaced pursuant to the above warranty under proper use and service against defects in workmanship and material; this warranty shall expire 60 days from date of start-up of such repaired or replaced Equipment or parts thereof or on the expiration of the original Equipment warranty, whichever is later.

If the nature of the defect is such that it is appropriate in the judgment of Seller to do so, repairs shall be made at the site of the Equipment. Seller warrants to Purchaser that any services performed by Seller in connection with startup or other servicing of Equipment shall be performed in a workmanlike manner; this warranty shall expire 60 days after the service date visit. If any nonconformity with this warranty appears, Seller shall re-perform the non-conforming portion of the services in a conforming manner.

Any warranties granted beyond those stated above must be specifically identified as a warranty in Seller's specific quotation. Correction by Seller of nonconformities (i.e. repair or replacement of Equipment that is defective in material or workmanship, and re-performance of service which was not performed in a workmanlike manner) in the manner and warranty period provided above shall be Purchaser's exclusive remedy (and Seller's exclusive obligation) with respect to nonconforming Equipment and/or services.

In the event Purchaser and Seller agree that Seller will sell any used Equipment to Purchaser, such used Equipment is sold AS-IS, WITH ALL FAULTS, AND WITHOUT WARRANTY OF ANY KIND.

THE ABOVE-STATED WARRANTIES ARE EXCLUSIVE AND IN LIEU OF ALL OTHER WARRANTIES, WHETHER WRITTEN, ORAL, IMPLIED, OR OTHERWISE. SELLER HEREBY EXPRESSLY DISCLAIMS ANY IMPLIED WARRANTIES OF MERCHANTABILITY AND FITNESS FOR ANY PARTICULAR PURPOSE.

12. CONFIDENTIALITY: In connection with the order and/or performance under this contract, Seller and Buyer (as to information disclosed, the "Disclosing Party") may each disclose Confidential Information to the other party hereto (the "Receiving Party"). " Confidential Information" shall mean all information related to the business or products (including but not limited to the Equipment) or services of the Disclosing Party that is not generally known to the public, and all pricing and terms of this contract, provided that the obligations of this paragraph shall not apply as to any portion of the Confidential Information which: (i) is or becomes generally available to the public other than as a result of disclosure by the Receiving Party, its representatives or its affiliates, or (ii) has been or is subsequently independently developed by the Receiving Party, its representatives or affiliates, without reference to the Confidential Information, or (iii) is required to be disclosed by law or valid legal process provided that the Receiving Party who intends to make such disclosure shall promptly notify the Disclosing Party in advance of such disclosure and reasonably cooperate in attempts to maintain the confidentiality of the Confidential Information. The Receiving Party agrees, except as otherwise required by law: (i) to use the Confidential Information only as the Disclosing Party intended it to be used by the Receiving Party in connection with providing or receiving the Equipment/service under this contract, and (ii) to take reasonable measures to prevent disclosure of the Confidential Information, except disclosure to its employees to the extent necessary to facilitate providing or receiving Equipment/services as contemplated under this contract. Upon the Disclosing Party's request, the Receiving Party shall destroy or return to Disclosing Party all copies of Confidential Information. If either party or any of their respective affiliates or representatives is required or requested by subpoena, interrogatories, or similar legal process
to disclose any Confidential Information, such party agrees to provide the Disclosing Party with prompt written notice of such request, so that the Disclosing Party may seek an appropriate protective order or waive compliance by the Receiving Party with the provisions herein. It is understood and agreed that this paragraph survives any expiration/termination of this contract.

13. INTELLECTUAL PROPERTY: No patents, copyrights, trademarks, trade secrets, or other intellectual property rights are being sold, granted, transferred, or assigned to Purchaser. Without limiting the generality of the foregoing, Seller retains all right, title and interest in and to all inventions, discoveries, ideas, works of authorship (including but not limited to all drawings), processes, methods, know-how, and techniques developed, discovered or conceived by Seller or its employees, including without limitation those developed and/or used in connection with the manufacture of Equipment or performing services hereunder. Such rights include, but are not limited to, patent rights, copyrights, trade secret rights, trademark rights, mask work rights and other proprietary rights throughout the world. Purchaser acknowledges and understands that no drawings, designs, specifications, or anything else provided by Seller shall be deemed to be "work made for hire."

14. PATENT INDEMNITY: Seller shall defend any suit or proceeding brought against Purchaser and shall pay any adverse judgment entered therein so far as such suit or proceeding is based upon a claim that the use of the Equipment or any part thereof manufactured by Seller, and furnished under this contract constitutes infringement of any patent of the United States of America, provided Seller is promptly notified in writing and given authority, information and assistance for defense of same, and Seller shall, at its option, procure for Purchaser the right to continue to use said Equipment, or modify it so that it becomes non-infringing, or replace the same with non-infringing equipment, or remove said Equipment and to refund the purchase price (less a reasonable amount for the time the Equipment was used). The foregoing shall not be construed to include any agreement by Seller to accept any liability whatsoever in respect to patents for inventions including more that the Equipment furnished hereunder, or in respect of patents for methods and processes to be carried out with the aid of said Equipment, except those which are inherent in the Equipment as furnished. The foregoing states the entire liability of Seller with regard to patent infringement. If any Equipment shall be sold by Seller to meet Purchaser's specifications or requirements and is not a part of Seller's standard line offered by it to the trade generally in the usual course of Seller's business, Purchaser agrees to defend, protect, and indemnify and save harmless Seller from any loss, damage, or injury arising out of a claim, suit or action at law or equity for actual or alleged infringement of any patent of the United States or foreign country because of the sale of such Equipment, and to defend any suits or actions which may be brought against Seller.

15. SOFTWARE: In the event any Equipment includes software in any form, such software is not sold to Purchaser but is only licensed on a limited, non-exclusive basis. Subject to Purchaser's compliance with these terms and conditions of sale, Seller grants to Purchaser for the useful life of such Equipment a royalty-free, non-exclusive, non-transferable license to use the software as intended by Seller solely for normal use of the Equipment. Purchaser shall not create derivative works based on the software, or reverse engineer, or disassemble or decompile the software, or transfer, copy, modify, or otherwise change the software.

16. EXPORT CONTROL: Equipment, technical data, technology, software, and services furnished by Seller to Purchaser shall at all times be subject to any and all applicable export control laws and regulations, including but not limited to applicable U.S. Export Administration Regulations, United Nations resolutions and European Union directives relating to trade embargoes and restrictions. Purchaser agrees and warrants that no Product, services, technical data, technology, software or other technical information or assistance or other item furnished by Seller, or any good or product resulting therefrom, shall be exported or re-exported by Purchaser or its authorized transferees, if any, directly or indirectly, in violation of any law or regulation.

Any export and/or re-export must be in strict accordance with applicable U.S. export laws and regulations, as well as United Nations resolutions and European Union directives relating to trade embargoes and restrictions. Violation of this paragraph constitutes a material and non-curable breach and entitles Seller to terminate the order immediately (even after shipment of the Equipment).

17. FORCE MAJEURE: If either party is delayed at any time by any Force Majeure, such party shall have such additional time within which to perform its obligations as may reasonably be necessary under the circumstances. "Force Majeure" means circumstances beyond the delayed party's reasonable control, including but not limited to, acts of God, acts of public enemies, wars, delays by Seller's suppliers, blockades, insurrections, riots, epidemics, quarantine restrictions, floods, lightning, fire, storms, earthquakes, and civil disturbances.

18. LIMITATION OF LIABILITY:
IN NO EVENT SHALL SELLER BE LIABLE FOR SPECIAL, INDIRECT, INCIDENTAL OR CONSEQUENTIAL DAMAGES (INCLUDING BUT NOT LIMITED TO LOSS OF PROFITS OR REVENUE, LOSS OF TOTAL OR PARTIAL USE OF THE EQUIPMENT OR SERVICES, DOWNTIME COSTS, AND DELAY COST) HOWSOEVER ARISING, WHETHER ON ACCOUNT OF EQUIPMENT OR SERVICES FURNISHED HEREUNDER, DELAYS OR OTHERWISE (WHETHER A CLAIM IS BASED ON WARRANTY, STRICT LIABILITY, CONTRACT, TORT, NEGLIGENCE OR OTHERWISE).

SELLER'S TOTAL LIABILITY FOR ALL CLAIMS OF ANY KIND (WHETHER BASED ON WARRANTY, STRICT LIABILITY, CONTRACT, TORT, NEGLIGENCE OR OTHERWISE) FOR ANY LOSS OR DAMAGE ARISING OUT OF, CONNECTED WITH, OR RESULTING FROM THIS CONTRACT OR THE PERFORMANCE OR BREACH THEREOF, OR FROM THE DESIGN, MANUFACTURE, SALE, DELIVERY, RESALE, REPAIR, REPLACEMENT, INSTALLATION, TECHNICAL DIRECTION OF INSTALLATION, INSPECTION, SERVICING, OPERATION OR USE OF ANY EQUIPMENT COVERED BY OR FURNISHED UNDER THIS CONTRACT SHALL BE LIMITED TO 100% OF THE PURCHASE PRICE AMOUNT PAID BY PURCHASER TO SELLER UNDER THIS CONTRACT FOR THE SPECIFIC EQUIPMENT OR SERVICE WHICH GIVES RISE TO THE CLAIM. ALL CAUSES OF ACTION AGAINST SELLER ARISING OUT OF OR RELATING TO THIS CONTRACT OR THE PERFORMANCE HEREOF SHALL EXPIRE UNLESS BROUGHT WITHIN ON YEAR OF TIME OF ACCRUAL THEREOF.

19. MISCELLANEOUS:
19.1 If for any reason, Seller's quotation (or any other document or act by Seller) is deemed an acceptance of an offer from Purchaser, such acceptance is expressly conditional upon Purchaser's assent to any additional or different terms or conditions set forth in these Terms and Conditions of Sale.

19.2 No modification or additional term or condition shall be applicable to this contract by virtue of Seller's receipt, acknowledgment or acceptance of Purchaser's purchase order, shipping instruction forms, or other Purchaser documentation containing terms or conditions which are different from or in addition to those set forth in these Terms and Conditions of Sale. Any such modifications or additional terms or conditions are specifically rejected and deemed a material alteration hereof. Purchaser's issuance of a purchase order or Purchaser's acceptance of any drawings, Equipment, or services from Seller shall (without prejudice to any other manner in which acceptance of these Terms and Conditions of Sale may be evidenced) constitute full acceptance of these Terms and Conditions of Sale.

19.3. Neither party shall assign or transfer this contract without the prior written consent of the other party (which consent shall not be unreasonably withheld); any purported assignment in violation of this sentence shall be void. Irrespective of the foregoing, Seller may without consent assign this contract (or any of rights or obligations hereunder) to any of its affiliates and use sub-contractors.

19.4. If any part of this document is held by a court of competent jurisdiction to be invalid or unenforceable for any reason, such invalidity or enforceability does not affect any other provision, and this document shall be construed as if the invalid or unenforceable provision had never been set forth.

19.5. Neither party's failure to enforce, or its waiver of a breach of, any provision contained in this document shall constitute a waiver of any other breach or of such provision.

19.6. The validity, performance, and all other matters relating to the interpretation and effect of this contract shall be governed by the laws of the State of Texas, USA, without regard to its conflict of laws principles, and the exclusive forum shall be the State of Texas. The United Nations Convention on the International Sale of Goods shall not apply.

19.7 These Terms and Conditions of Sale cannot be superseded, amended, or modified except by a written document signed in handwriting by
Seller's duly authorized officer and Buyer's duly authorized representative.

19.8. All headings, captions and numbering in these Terms and Conditions of Sale are for convenience of reference only and shall notbe used to interpret any meaning of any terms or condition.

19.9. Seller and Purchaser are independent contractors; neither party shall act as the agent for the other. This contract is between Seller and
Purchaser alone, and there are no intended rights or benefits provided hereunder to any third party.

TAB B

Alternative B – Technical Data (Option 1 & 2)

Includes:
1. Option 1 a. Blower General Data Sheet b. Blower Performance Data and Curves c. Blower Preliminary Dimensional Drawings 2. Option 2 a. Blower General Data Sheet b. Blower Performance Data and Curves c. Blower Preliminary Dimensional Drawings

OPTION 1

GL-8

Integrally Geared Single Stage Blower

Model GL-8

Service

Air, Gas, Pressure, Vacuum

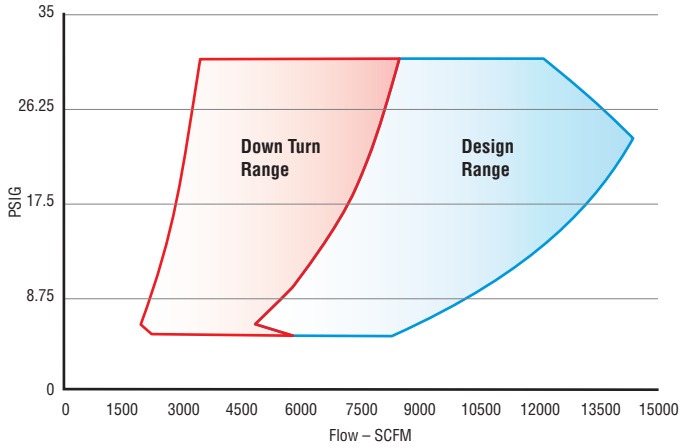

Standard Specifications

Gas	Air, Steam, H2S, Biogas, Fuel Gas, CO2, N2, LNG, Custom
Flow Range	100% to 35% of Rated Flow with Combination Control
Pressure Range	Up to 30 PSIG / 2 bar
Maximum Case Pressure	50 PSIG / 3.5 bar
Stages	Single Stage
Drive Type	Direct Coupled
Power Driver Options	Electric Motor, Steam Turbine, Combustion Engine
Gearbox	Helical Gear Set
Cooling Lubricant	Lubricant Cooling (Air or Liquid)
Lubrication Options	Pressurized Oil
Bearings	Pinion - Tilt Pad Journal, Drive Journal
Enclosure	Optional
Sound Level	Job Specific
Sound Level with Enclosure	Job Specific
Filtration Rating (std)	99% at 2 micron, or as required
Seals Air	Labyrinth Type

Standard Materials of Construction

Casing	Grey Iron GG25, Ductile, ASTM A536, A48 or Equal
Bearings	ANSI 5140 Steel, Babbited, 40CR Alloy Casing
Impeller	AlCu2MgNi Alloy (annodized), 17-4PH, Titanium, Inconel
Inlet Guide Vanes	Stainless Steel 316
Discharge Diffuser Vanes	Stainless Steel 316
Gears	AISI 8620, Steel 10CrNiMo to AGMA 12/13
Shaft	Steel 10CrNiMo
Seals Air	ASTM B86 Z25631 Zinc Alloy Aluminum
Seals Gas	ASTM C695 Molded Graphite
Blower Base Skid	ASTM A36 Structural Steel
Isolation Pads	St. SIS 1312 inertial dampening with rubber hardness 60
Finish	2 Part Epoxy Lone Star Blue RAL5005
Enclosure	Aluminum, Galvanized Steel, Stainless

Optional Testing & Certifications

API	API 617, API 672, API 614
Electrical	UL 508A, CE, CSA
Hazardous Location	ATEX, Class1 - Division 1- Division 2, Zone 0-2
Balancing	ISO 1940 - G2.5, ~4W/N API
Noise Level	OSHA 1910.95, ISO 2151:2004
Performance	ASME PTC-10, PTC-13, ISO 5389
Hydro Testing	1.5 Time MAWP
Overspeed Testing	Optional
Positive Material ID	XRF, OES, Material Certification
NACE Compliance	Optional
Special Coatings	Optional

Control Options

Control Methods	Variable Inlet and Discharge Guide Vane, speed control, blow off, or combination
Local Controller	sLOC™ Standard - Custom for Allen Bradley, Modicon, Siemens or Other
HMI	sLOC™ Standard or Custom HMI
Remote Monitoring	sLINK™ or Custom
Control Set Points	Pressure, Flow, Power, Custom Input

ALTERNATIVE B - OPTION 1

BLOWER PERFORMANCE DATA AND CURVES

ALTERNATIVE B - GUARANTEES						
OPTION 1 - IGV and VFD (7,900 SCFM)						
Design Point	Capacity %	Discharge Air Flow Per Blower (scfm)	Discharge Pressure (psig)	Inlet Temp °F	RH %	Estimated Power HP
1	100	7900	5.5	100	15	246
2	80	6320	5.3	75	40	183
3	60	4740	5.2	45	60	134
4	45	3555	5.1	40	60	1□8
5	100	7900	5.5	40	40	216
6	45	3555	5.1	100	40	120

1. Ambient Pressure: 14.07 psia
2. Inlet Pressure at Blower Inlet Flange 13.87 psia

Notes:

1. Please note it is unclear what air flow per blower each estimated power number is associated with in the table in Section 11629/11371, 2.1.B, as there are multiple combinations and blowers online that could be utilized. For simplicity and clarity, we have included guarantee power numbers per blower, as detailed above. Performance curves are included for each condition. Additional points can be provided, if required.

2. It is assumed that air flow values provided are scfm, defined at (14.67 psia, 68°F, 36% RH), This the typical industry standard and in accordance with process manufacturer's air flow calculation. If this assumption is incorrect, please advise and we will reevaluate blower selection, accordingly.

Lone Star Blower

GL SERIES – GEARED TURBO PERFORMANCE CURVE

Project:	City of Surprise
Project Ref:	Alternative B - Option 1
Engineer:	Water Works
Date:	10/2/22 4:12 PM

Technology:	Geared Turbo
Selected Model:	GL8

	Units	Design	Alt Flow	Alt Flow	Alt Flow	Alt Flow	Alt Flow
Volume Flow at Inlet	ICFM	8,894.9	8,005.4	7,115.9	5,336.9	4,002.7	3,557.9
Specified Volume	Delivered SCFM	7,900	7,110	6,320	4,740	3,555	3,160
Capacity	%	100	90	80	60	45	40
Specified Flow defined at	*Pressure 14.7 PSIA*						
	Temperature 68 °F						
	Relative Humidity 36 %						
Inlet Temperature	°F	100	100	100	100	100	100
Relative Humidity	%	15	15	15	15	15	15
Barometric Pressure	PSIA	14.07	14.07	14.07	14.07	14.07	14.07
Inlet Pressure Losses	PSIG	0.20	0.20	0.20	0.20	0.20	0.20
Pressure at Inlet	PSIA	13.87	13.87	13.87	13.87	13.87	13.87
Pressure at Discharge	PSIG	5.50	5.50	5.30	5.20	5.10	5.10
Total Delta Pressure	PSID	5.70	5.70	5.50	5.40	5.30	5.30
Temperature at Discharge	°F	167.16	165.72	163.80	164.11	166.32	167.20
Blower Speed	RPM	9284	9213	8924	8788	8664	8671
Gearbox Input Shaft Power	HP	245.67	218.33	190.36	147.41	117.94	107.88

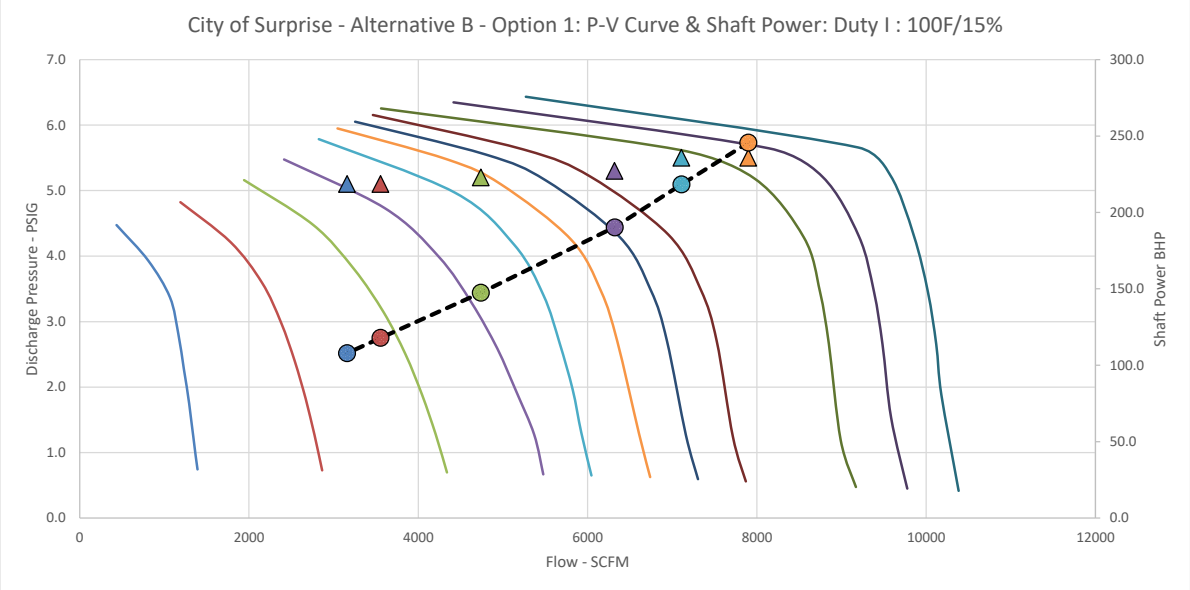

Lone Star Blower

GL SERIES – GEARED TURBO PERFORMANCE CURVE

Project:	City of Surprise
Project Ref:	Alternative B - Option 1
Engineer:	Water Works
Date:	10/2/22 4:12 PM

Technology:	Geared Turbo
Selected Model:	GL8

	Units	Alt Flow	Alt Flow	Alt Flow	Alt Flow	Alt Flow	Alt Flow
Volume Flow at Inlet	ICFM	8,515.5	7,663.9	6,812.4	5,109.3	3,832.0	3,406.2
Specified Volume	Delivered SCFM	7,900	7,110	6,320	4,740	3,555	3,160
Capacity	%	100	90	80	60	45	40
Specified Flow defined at	*Pressure 14.7 PSIA*						
	Temperature 68 °F						
	Relative Humidity 36 %						
Inlet Temperature	°F	75	75	75	75	75	75
Relative Humidity	%	40	40	40	40	40	40
Barometric Pressure	PSIA	14.07	14.07	14.07	14.07	14.07	14.07
Inlet Pressure Losses	PSIG	0.20	0.20	0.20	0.20	0.20	0.20
Pressure at Inlet	PSIA	13.87	13.87	13.87	13.87	13.87	13.87
Pressure at Discharge	PSIG	5.50	5.50	5.30	5.20	5.20	5.10
Total Delta Pressure	PSID	5.70	5.70	5.50	5.40	5.40	5.30
Temperature at Discharge	°F	138.83	137.77	135.98	136.37	139.63	139.26
Blower Speed	RPM	8817	8809	8533	8403	8426	8290
Gearbox Input Shaft Power	HP	234.33	209.28	182.63	141.65	115.32	103.61

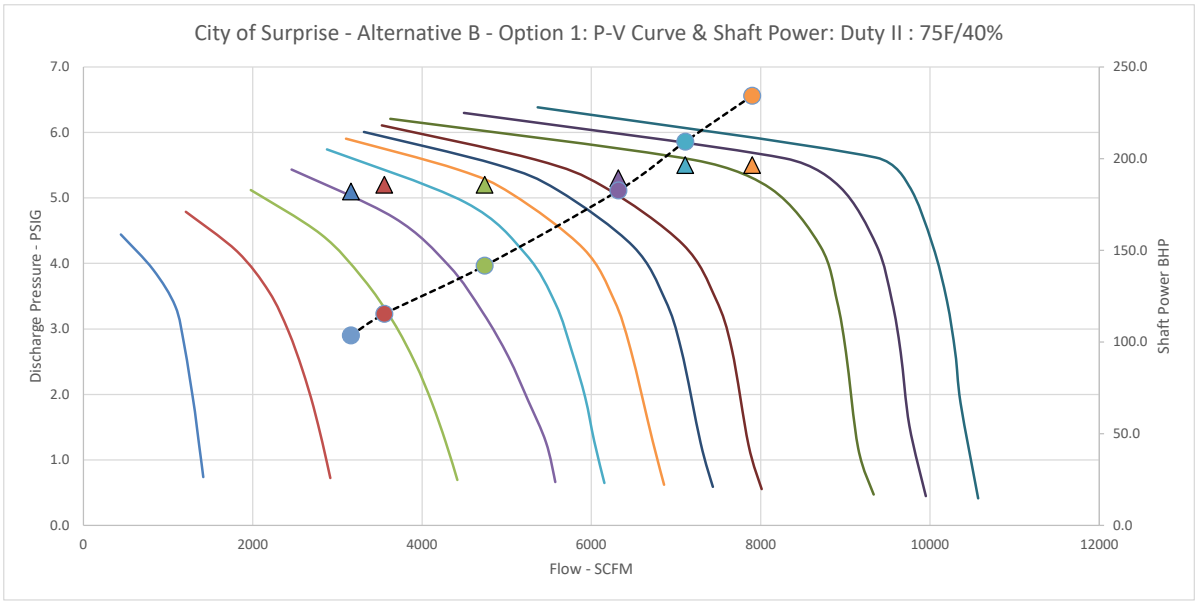

Lone Star Blower

GL SERIES – GEARED TURBO PERFORMANCE CURVE

Project:	City of Surprise
Project Ref:	Alternative B - Option 1
Engineer:	Water Works
Date:	10/2/22 4:12 PM

Technology:	Geared Turbo
Selected Model:	GL8

	Units	Alt Flow	Alt Flow	Alt Flow	Alt Flow	Alt Flow	Alt Flow
Volume Flow at Inlet	ICFM	7,989.7	7,190.7	6,391.8	4,793.8	3,595.4	3,195.9
Specified Volume	Delivered SCFM	7,900	7,110	6,320	4,740	3,555	3,160
Capacity	%	100	90	80	60	45	40
Specified Flow defined at	*Pressure* *14.7* *PSIA*						
	Temperature *68* *°F*						
	Relative Humidity *36* *%*						
Inlet Temperature	°F	45	45	45	45	45	45
Relative Humidity	%	60	60	60	60	60	60
Barometric Pressure	PSIA	14.07	14.07	14.07	14.07	14.07	14.07
Inlet Pressure Losses	PSIG	0.20	0.20	0.20	0.20	0.20	0.20
Pressure at Inlet	PSIA	13.87	13.87	13.87	13.87	13.87	13.87
Pressure at Discharge	PSIG	5.50	5.50	5.30	5.20	5.10	5.10
Total Delta Pressure	PSID	5.70	5.70	5.50	5.40	5.30	5.30
Temperature at Discharge	°F	104.76	104.35	102.71	103.26	105.35	105.84
Blower Speed	RPM	8300	8297	8037	7916	7806	7809
Gearbox Input Shaft Power	HP	218.43	196.89	172.03	133.88	107.34	97.79

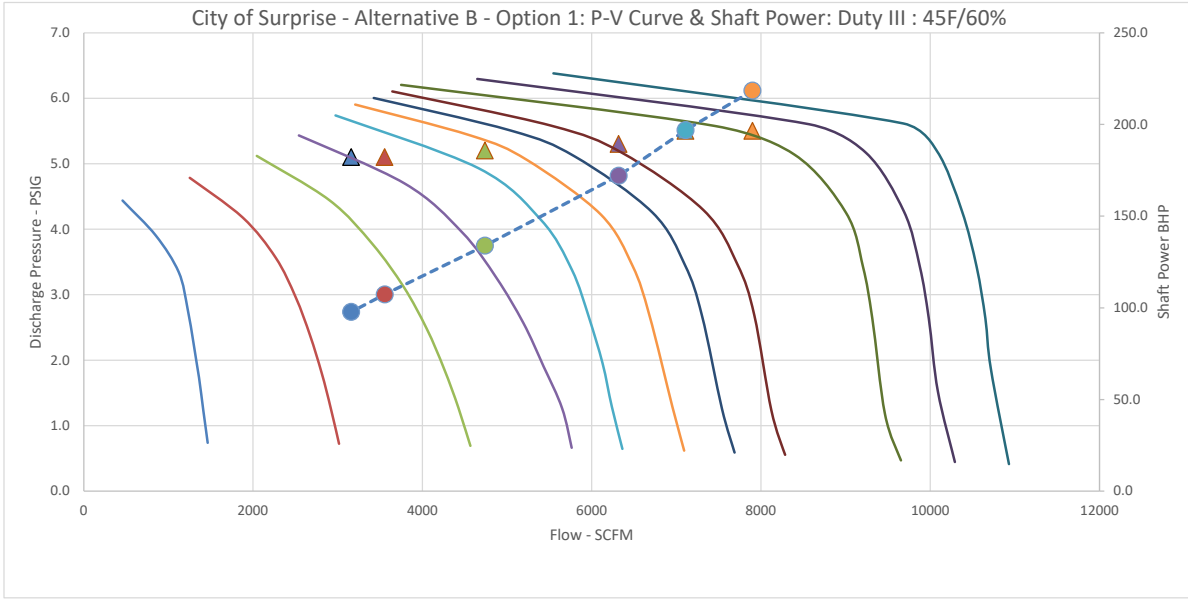

Lone Star Blower

GL SERIES – GEARED TURBO PERFORMANCE CURVE

Project:	City of Surprise
Project Ref:	Alternative B - Option 1
Engineer:	Water Works
Date:	10/4/22 1:41 PM

Technology:	Geared Turbo
Selected Model:	GL8

	Units	Alt Flow	Alt Flow	Alt Flow	Alt Flow	Alt Flow	Alt Flow
Volume Flow at Inlet	ICFM	7901.8	7111.6	6321.4	4741.1	3555.8	3160.7
Specified Volume	Delivered SCFM	7900	7110	6320	4740	3555	3160
Capacity	%	100	90	80	60	45	40
Specified Flow defined at	*Pressure* 14.7 PSIA						
	Temperature 68 °F						
	Relative Humidity 36 %						
Inlet Temperature	°F	40	40	40	40	40	40
Relative Humidity	%	60	60	60	60	60	60
Barometric Pressure	PSIA	14.07	14.07	14.07	14.07	14.07	14.07
Inlet Pressure Losses	PSIG	0.20	0.20	0.20	0.20	0.20	0.20
Pressure at Inlet	PSIA	13.87	13.87	13.87	13.87	13.87	13.87
Pressure at Discharge	PSIG	5.50	5.50	5.30	5.20	5.10	5.10
Total Delta Pressure	PSID	5.70	5.70	5.50	5.40	5.30	5.30
Temperature at Discharge	°F	99.09	98.77	97.16	97.77	99.78	100.27
Blower Speed	RPM	8213	8211	7954	7835	7725	7729
Gearbox Input Shaft Power	HP	215.79	194.81	170.25	132.64	106.27	96.82

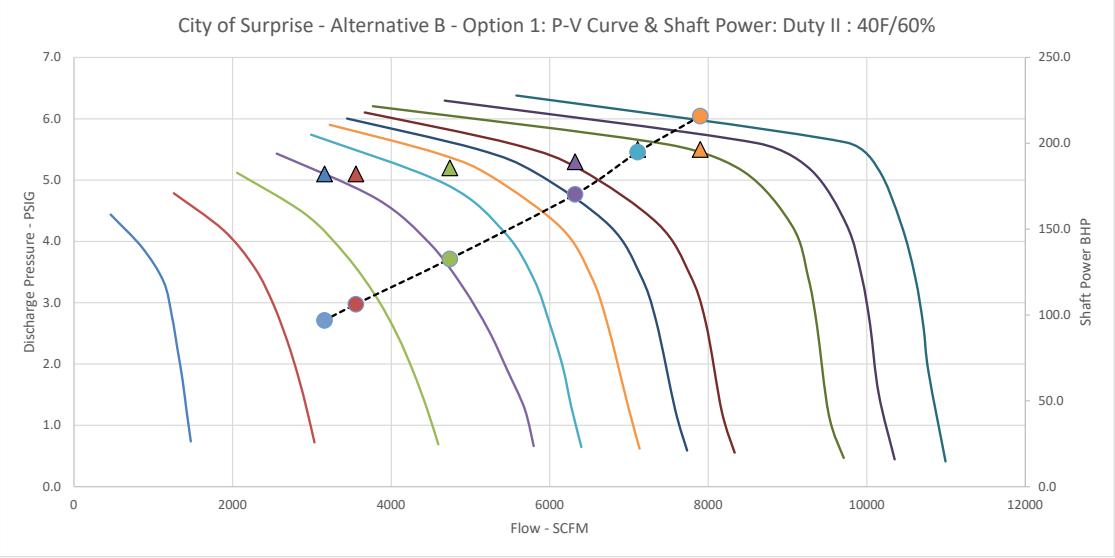

Lone Star Blower

GL SERIES – GEARED TURBO PERFORMANCE CURVE

Project:	City of Surprise
Project Ref:	Alternative B - Option 1
Engineer:	Water Works
Date:	10/2/22 4:25 PM

Technology:	Geared Turbo
Selected Model:	GL8

	Units	Alt Flow	Alt Flow	Alt Flow	Alt Flow	Alt Flow	Alt Flow
Volume Flow at Inlet	ICFM	7,888.1	7,099.3	6,310.5	4,732.9	3,549.7	3,155.2
Specified Volume	Delivered SCFM	7,900	7,110	6,320	4,740	3,555	3,160
Capacity	%	100	90	80	60	45	40
Specified Flow defined at	*Pressure 14.7 PSIA*						
	Temperature 68 °F						
	Relative Humidity 36 %						
Inlet Temperature	°F	40	40	40	40	40	40
Relative Humidity	%	40	40	40	40	40	40
Barometric Pressure	PSIA	14.07	14.07	14.07	14.07	14.07	14.07
Inlet Pressure Losses	PSIG	0.20	0.20	0.20	0.20	0.20	0.20
Pressure at Inlet	PSIA	13.87	13.87	13.87	13.87	13.87	13.87
Pressure at Discharge	PSIG	5.50	5.50	5.30	5.20	5.10	5.10
Total Delta Pressure	PSID	5.70	5.70	5.50	5.40	5.30	5.30
Temperature at Discharge	°F	99.08	98.79	97.19	97.81	99.81	100.29
Blower Speed	RPM	8208	8206	7949	7830	7720	7724
Gearbox Input Shaft Power	HP	215.37	194.51	169.99	132.48	106.12	96.68

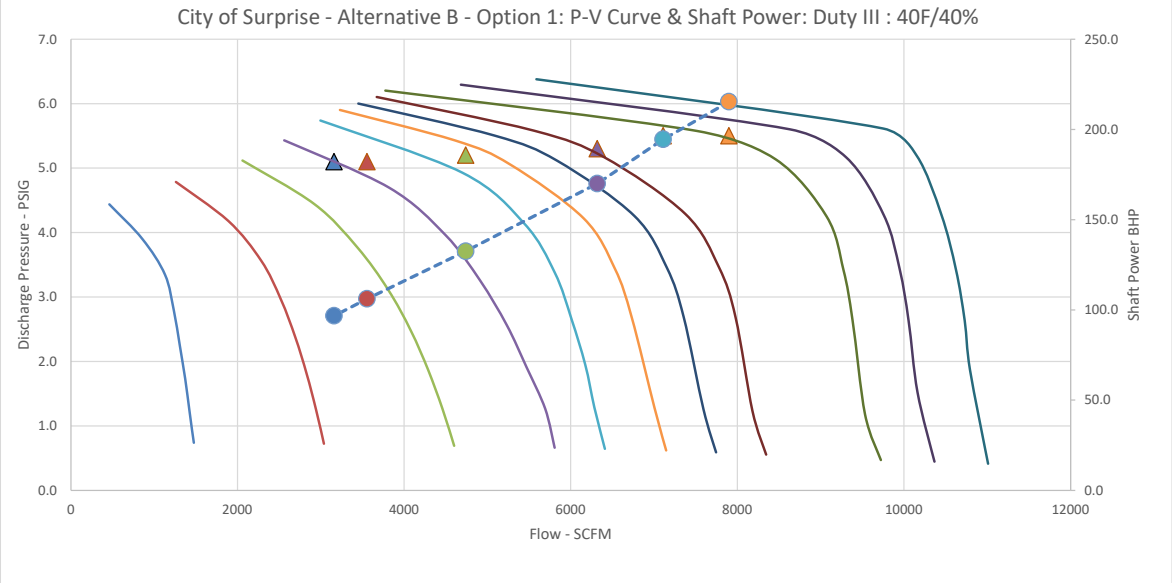

Lone Star Blower

GL SERIES – GEARED TURBO PERFORMANCE CURVE

Project:	City of Surprise
Project Ref:	Alternative B - Option 1
Engineer:	Water Works
Date:	10/2/22 4:29 PM

Technology:	Geared Turbo
Selected Model:	GL8

	Units	Alt Flow	Alt Flow	Alt Flow	Alt Flow	Alt Flow	Alt Flow
Volume Flow at Inlet	ICFM	9,048.6	8,143.7	7,238.9	5,429.1	4,071.9	3,619.4
Specified Volume	Delivered SCFM	7,900	7,110	6,320	4,740	3,555	3,160
Capacity	%	100	90	80	60	45	40
Specified Flow defined at	*Pressure* *14.7 PSIA*						
	Temperature *68 °F*						
	Relative Humidity *36 %*						
Inlet Temperature	°F	100	100	100	100	100	100
Relative Humidity	%	40	40	40	40	40	40
Barometric Pressure	PSIA	14.07	14.07	14.07	14.07	14.07	14.07
Inlet Pressure Losses	PSIG	0.20	0.20	0.20	0.20	0.20	0.20
Pressure at Inlet	PSIA	13.87	13.87	13.87	13.87	13.87	13.87
Pressure at Discharge	PSIG	5.50	5.50	5.30	5.20	5.10	5.10
Total Delta Pressure	PSID	5.70	5.70	5.50	5.40	5.30	5.30
Temperature at Discharge	°F	167.30	165.56	163.59	163.78	165.90	166.94
Blower Speed	RPM	9284	9271	8980	8842	8717	8724
Gearbox Input Shaft Power	HP	250.78	221.91	193.33	149.40	119.38	109.40

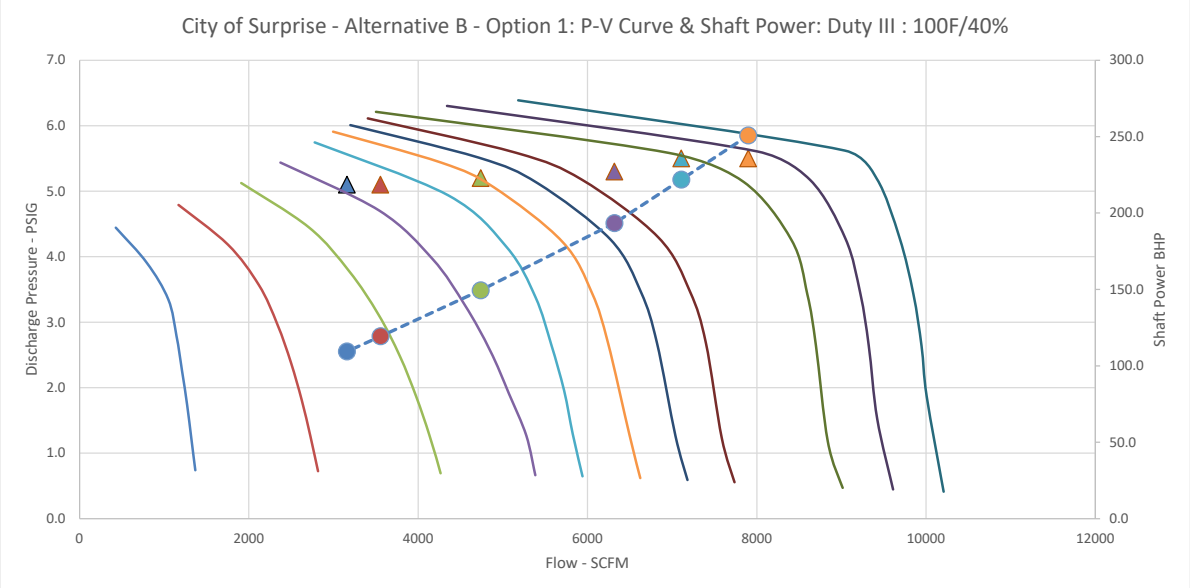

REVISION HISTORY			
REV	DESCRIPTION	DATE	APPROVED
1	AIR OUTLET VERTICALLY UP	5/27/2016	
2	RENAMED DWG FROM GL8-WX-03 TO GL8-WX-01, CONVERTED FROM mm TO INCHES	7/11/2016	

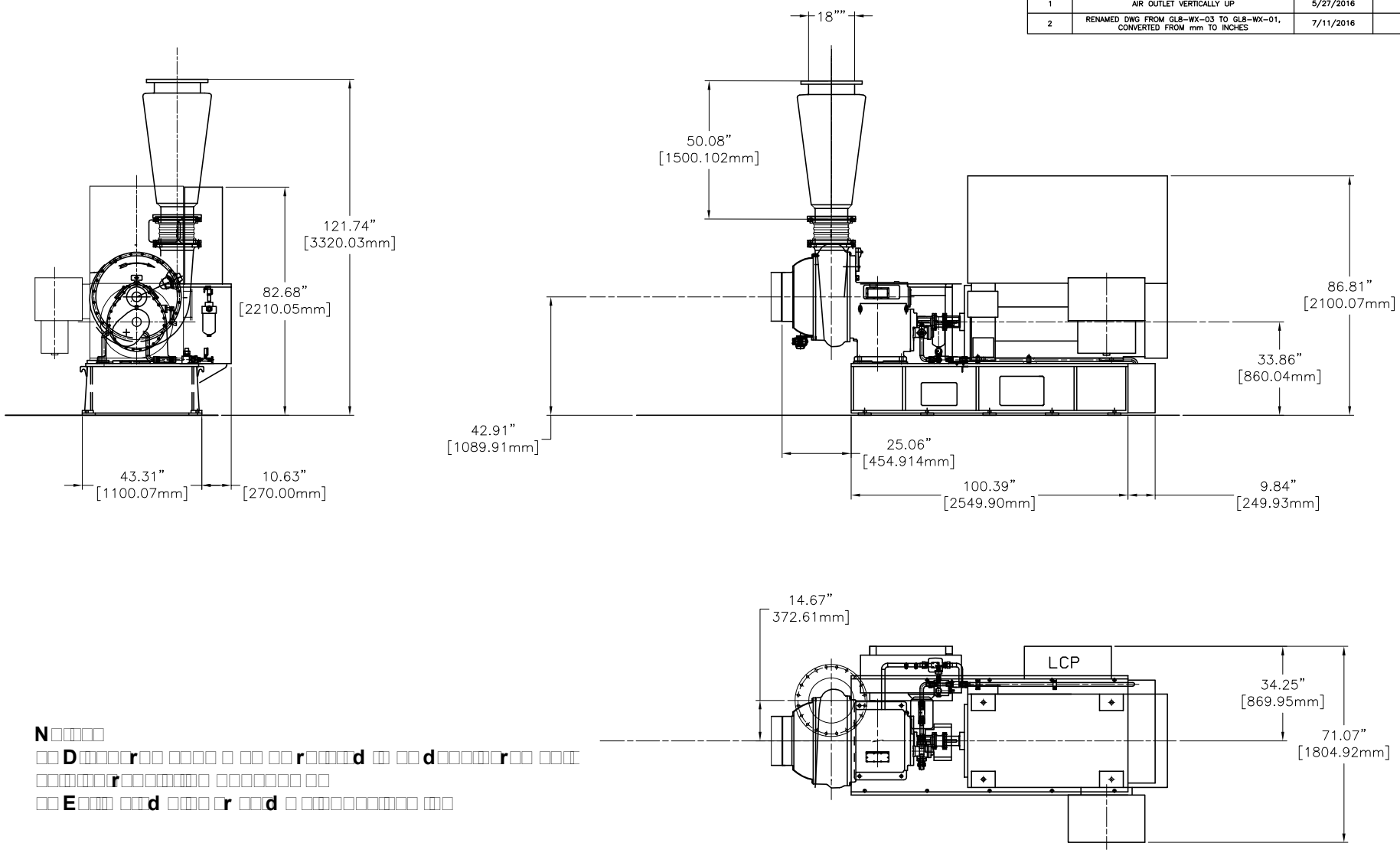

N
D r r d d r
r
E d r d

DRAWING IS FOR REFERENCE ONLY UNLESS SPECIFIED AS RELEASED.		
APPROVALS		
DRAWN	BW	07/011/2016
CHECK		
ENGINEER		
MANUFACTURING		
CONTROL		
APPROVED		

THIRD ANGLE PROJECTION

LONE STAR BLOWER

TITLE
GL-8 GEARED TURBO
GENERAL ASSEMBLY 18" CONE

SIZE	CAGE CODE	DWG NUMBER	REV
A	-	GL8-WX-01	02
SCALE		SHEET 1 OF 1	

BILL OF MATERIALS			
ITEM NO.	PART NUMBER	QTY.	DESCRIPTION
1	N/A	1	BLOWER,
2	2000600001	1	PUMP, OIL, AUX, TOP-N350HVB, NIPPON
3	1000976003	2	ACTUATOR, GUIDE VANE, 110 V, RCEL-009L
4	TBD	1	SKID
5	TBD	1	MOTOR, ELECTRIC
6	TBD	1	COUPLING, DISC, XTSR71-1088, REXNORD
7	2000600056	8	ISOLATOR, GL, VIBRATION, ASMR-1E-1400
8	2000600014	3	MAGNET, GL, OIL TANK, CERAMIC, 99N005
9	2000300030	1	FILL CAP, GL, SKID MAIN OIL CIRCUIT, LENZ, FCS-557
10	2002000009	1	AUX PUMP SUB ASSY(LESS PUMP & MOTOR), GL1-GL20
11	1000900017	1	PUMP MOTOR, GL, 1LE1001-1AB42, SIEMENS
12	2002000000	1	ACTIVE DEMISTER SUB ASSY (LESS CHIMNEY), GL1-GL20
13	2000600088	1	DEMISTER CHIMNEY, ACTIVE, GL, 10.75", SKID
14	2000600036	1	PUMP, OIL, MECHANICAL, TOP-N340HVB, NIPPON
15	2000600002	1	FILTER, LF330, SKID
16	2000608081	1	BASE, GL8, GUARD, DISC
17	2000608082	1	GUARD, GL8, COUPLING, DISC
18	2000608083	1	FILTER MOUNT BRACKET, GL8
19	TBD	1	OIL COOLER, GL, WATER,
20	2000600007	1	OIL HEATER, 480V, SRY6-5
21	TBD	1	MOUNT, LCP
22	1000976067	1	TEMP PROBE, RTD, 6", 1/4" MNPT, -200/600°C, TH11-F2CAB31AK1, ENDRESS HAUSER
23	1000976050	1	PRESSURE SENSOR, 1/4" MNPT, 0-30 PSIA, PTP31B-AA7M2KGFVUJ, ENDRESS HAUSER
24	1000976056	1	PRESSURE SENSOR, 1/4" MNPT, 0-30 PSIG, PTP31B-AA7M1KGFVUJ, ENDRESS HAUSER
25	1000976085	1	TEMP PROBE, RTD, 9", 1/4" MNPT, -50/200°C, TH11-F3CAB31AK1, ENDRESS HAUSER
26	1000976066	1	TEMP PROBE, RTD, 12", 1/4" MNPT, -50/200°C, TH11-F4CAB31AK1, ENDRESS HAUSER
27	1000976058	1	TEMP PROBE, RTD, 30mm, 1/4" MNPT, TTR31-A1C11UDA1AAB, ENDRESS HAUSER
28	1000976057	1	PRESSURE SWITCH, 1/4" MNPT, 0-60 PSIG, PTP31B-AA7M1MGFVUJ, ENDRESS HAUSER
29	1000976071	1	TRANSDUCER, PRESSURE, 1/8", 100 PSI, GC55-7-F01-42-CG-100, ASHCROFT
30	1000976073	1	SURGE SENSOR, IGC209, IFM
31	1000976025	1	ZERO SPEED SENSOR, TURCK BI 5-M18E-RP6X-H1143, GEARBOX
32	1000976097	2	PROXIMITY PROBE, M10 x 1, 200mm, 1 METER ARMORED CABLE, WL-142K05T-M200202/NB1, SHINKAWA
33	1000976096	1	PROXIMITY PROBE, M10 x 1, 120mm, 1 METER ARMORED CABLE, WL-142K05T-M200122/NB1, SHINKAWA
34	1000976098	3	EXTENSION CABLE, ARMORED, 4 METER, WW-142KT-1/NB1, SHINKAWA
35	1000976076	4	INSTRUMENT CABLE, M12, 90 DEGREE, 10 METER, EVC009, IFM
36	1000976042	1	INSTRUMENT CABLE, M12, STRAIGHT, 10 METER, EVC003, IFM
37	1000976035	1	CURRENT TRANSMITTER, 0-300 AMP, H221, HAWKEYE
38	2000600009	1	LEVEL GAUGE, GL, OIL TANK, 1111K28, 1/2" MNPTF
39	1000976033	1	DP TRANSMITTER, AIR FILTER, 0-5 IN WC, MS2-W102-LCD, DWYER
40	2002008001	1	ASSEMBLY, SKID MAIN OIL CIRCUIT, GL8-20 , LOCAL AIR COOLED
41	N/A	1	FLEXIBLE CONNECTOR
42	N/A	1	DISCHARGED CONE
43	N/A	1	LCP
44	N/A	1	INLET FILTER

PART #	MATERIAL SPECIFICATION	WEIGHT (lb)
2001200018		

REVISION HISTORY				
REFERENCE DOC	REV	DESCRIPTION	DATE	APPROVED
	0			

N

S **dr** **r** **r**

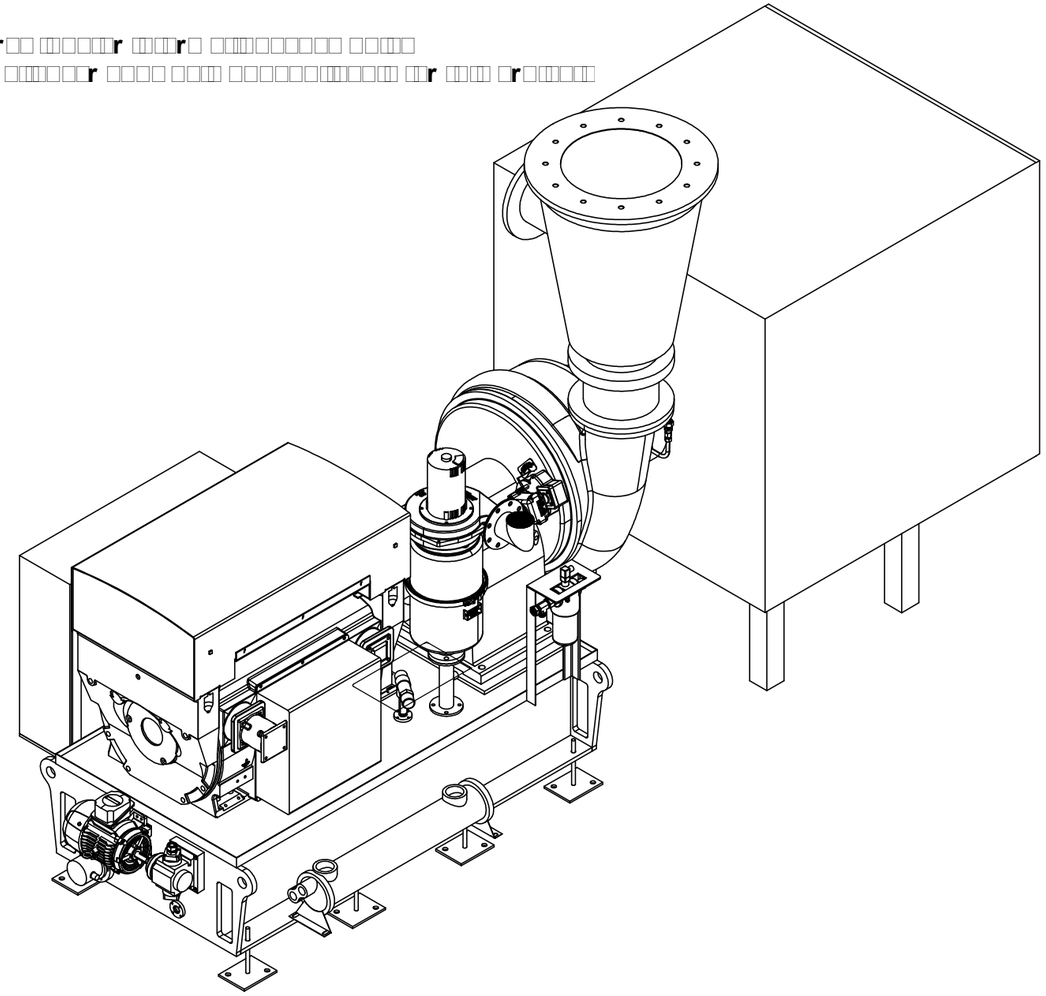

INTERPET ALL GEOMETRIC DIMENSIONING AND TOLERANCING TO ASME Y14.5

ALL DIMENSIONS ARE IN INCHES UNLESS OTHERWISE SPECIFIED

STANDARD TOLERANCES

.X	±.015
.XX	±.010
.XXX	±.005
X/X	±1/16
ANGLES	± 1°

REMOVE BURRS AND BREAK ALL SHARP EDGES
MACHINED SURFACES 125

DRAWING IS FOR REFERENCE ONLY UNLESS SPECIFIED AS APPROVED

THE INFORMATION CONTAINED IN THIS DRAWING IS THE SOLE PROPERTY OF LONE STAR BLOWER. ANY REPRODUCTION IN PART OR AS A WHOLE WITHOUT THE WRITTEN PERMISSION OF LONE STAR BLOWER IS PROHIBITED.

DRAWN BY: TS	DATE: 09/20/2022
CHECKED BY	DATE
APPROVED BY	DATE

THIRD ANGLE PROJECTION

LONE STAR

GENERAL ARRANGEMENT, 5010/5011, LOCAL WAT COOLED, W/ MOUNTED LCP

SIZE	DWG. NO.	REV
B	2008000261	0

SCALE: 1:25 | DO NOT SCALE | SHEET 1 OF 4

REVISION HISTORY				
REFERENCE DOC	REV	DESCRIPTION	DATE	APPROVED
	0			

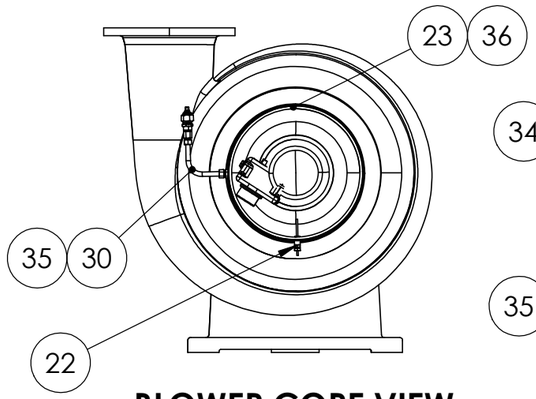

BLOWER CORE VIEW

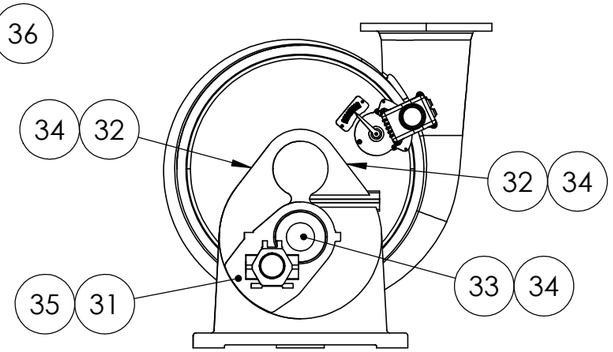

GEARBOX CORE VIEW

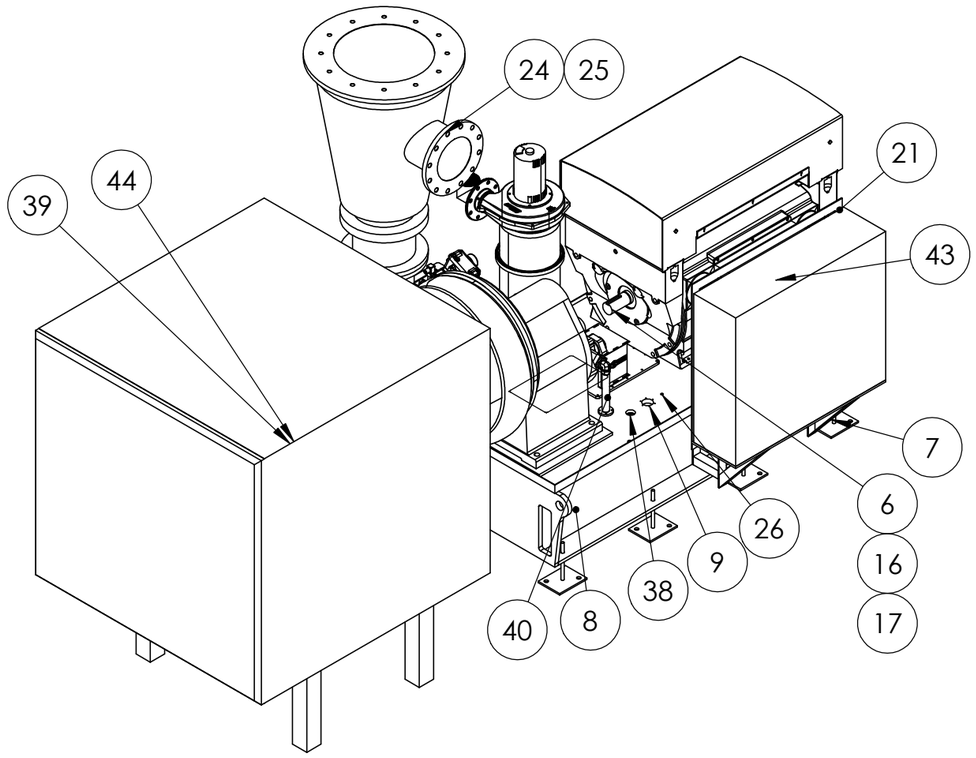

TOP BLOWER SIDE ISO VIEW

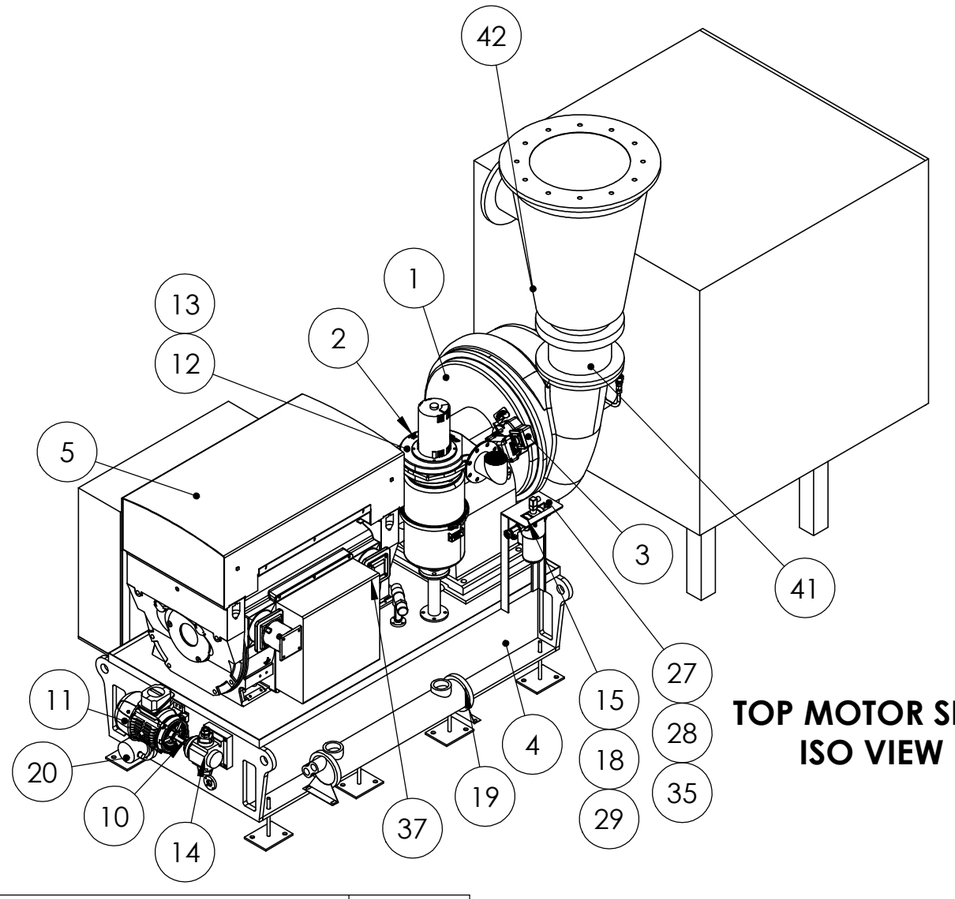

TOP MOTOR SIDE ISO VIEW

N
S dr r r

PART #	MATERIAL SPECIFICATION	WEIGHT (lb)
2001200018		

INTERPET ALL GEOMETRIC DIMENSIONING AND TOLERANCING TO ASME Y14.5

ALL DIMENSIONS ARE IN INCHES UNLESS OTHERWISE SPECIFIED

STANDARD TOLERANCES

.X	±.015
.XX	±.010
.XXX	±.005
X/X	±1/16
ANGLES	± 1°

REMOVE BURRS AND BREAK ALL SHARP EDGES
MACHINED SURFACES 125

DRAWING IS FOR REFERENCE ONLY UNLESS SPECIFIED AS APPROVED

THE INFORMATION CONTAINED IN THIS DRAWING IS THE SOLE PROPERTY OF LONE STAR BLOWER. ANY REPRODUCTION IN PART OR AS A WHOLE WITHOUT THE WRITTEN PERMISSION OF LONE STAR BLOWER IS PROHIBITED.

DRAWN BY TS	DATE 09/20/2022
CHECKED BY	DATE
APPROVED BY	DATE

THIRD ANGLE PROJECTION

LONE STAR

GENERAL ARRANGEMENT, GL8, 5010/5011, LOCAL WATER COOLED, W/ MOUNTED LCP

SIZE	DWG. NO.	REV
B	2008000261	0
SCALE: 1:30	DO NOT SCALE	SHEET 2 OF 4

Lone Star Blower, Inc.
8883 West Monroe Road
Houston, TX 77061

PH: 832-532-3112
FAX: 832-532-3115

GL-8

Integrally Geared Single Stage Blower

Model GL-8

Standard Specifications

Gas	Air, Steam, H2S, Biogas, Fuel Gas, CO2, N2, LNG, Custom
Flow Range	100% to 35% of Rated Flow with Combination Control
Pressure Range	Up to 30 PSIG / 2 bar
Maximum Case Pressure	50 PSIG / 3.5 bar
Stages	Single Stage
Drive Type	Direct Coupled
Power Driver Options	Electric Motor, Steam Turbine, Combustion Engine
Gearbox	Helical Gear Set
Cooling Lubricant	Lubricant Cooling (Air or Liquid)
Lubrication Options	Pressurized Oil
Bearings	Pinion - Tilt Pad Journal, Drive Journal
Enclosure	Optional
Sound Level	Job Specific
Sound Level with Enclosure	Job Specific
Filtration Rating (std)	99% at 2 micron, or as required
Seals Air	Labyrinth Type

Service

Air, Gas, Pressure, Vacuum

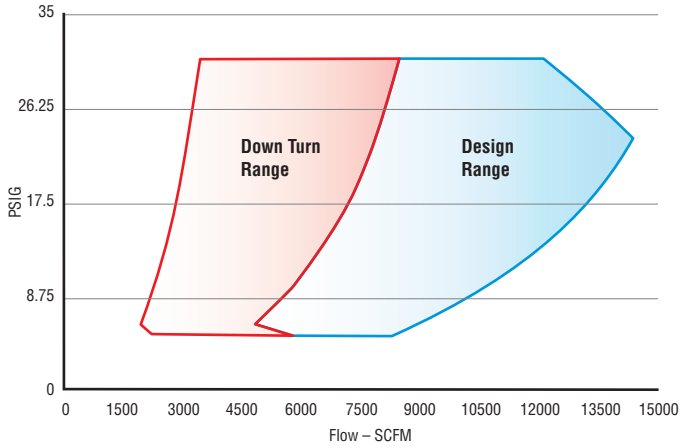

Standard Materials of Construction

Casing	Grey Iron GG25, Ductile, ASTM A536, A48 or Equal
Bearings	ANSI 5140 Steel, Babbited, 40CR Alloy Casing
Impeller	AlCu2MgNi Alloy (annodized), 17-4PH, Titanium, Inconel
Inlet Guide Vanes	Stainless Steel 316
Discharge Diffuser Vanes	Stainless Steel 316
Gears	AISI 8620, Steel 10CrNiMo to AGMA 12/13
Shaft	Steel 10CrNiMo
Seals Air	ASTM B86 Z25631 Zinc Alloy Aluminum
Seals Gas	ASTM C695 Molded Graphite
Blower Base Skid	ASTM A36 Structural Steel
Isolation Pads	St. SIS 1312 inertial dampening with rubber hardness 60
Finish	2 Part Epoxy Lone Star Blue RAL5005
Enclosure	Aluminum, Galvanized Steel, Stainless

Optional Testing & Certifications

API	API 617, API 672, API 614
Electrical	UL 508A, CE, CSA
Hazardous Location	ATEX, Class1 - Division 1- Division 2, Zone 0-2
Balancing	ISO 1940 - G2.5, ~4W/N API
Noise Level	OSHA 1910.95, ISO 2151:2004
Performance	ASME PTC-10, PTC-13, ISO 5389
Hydro Testing	1.5 Time MAWP
Overspeed Testing	Optional
Positive Material ID	XRF, OES, Material Certification
NACE Compliance	Optional
Special Coatings	Optional

Control Options

Control Methods	Variable Inlet and Discharge Guide Vane, speed control, blow off, or combination
Local Controller	sLOC™ Standard - Custom for Allen Bradley, Modicon, Siemens or Other
HMI	sLOC™ Standard or Custom HMI
Remote Monitoring	sLINK™ or Custom
Control Set Points	Pressure, Flow, Power, Custom Input

ALTERNATIVE B - OPTION 2

BLOWER PERFORMANCE DATA AND CURVES

ALTERNATIVE B - GUARANTEES						
OPTION 2 - IGV and VD (7,900 SCFM)						
Design Point	Capacity %	Discharge Air Flow (SCFM)	Discharge Pressure psig	Inlet Temp F	RH %	Estimated Power HP
1	100	7900	5.5	100	15	247
2	80	6320	5.3	75	40	188
3	60	4740	5.2	45	60	141
4	45	3555	5.1	40	60	115
5	100	7900	5.5	40	40	228
6	45	3555	5.1	100	40	119

1. Ambient Pressure: 14.07 psia
2. Inlet Pressure at Blower Inlet Flange 13.87 psia

Notes:

1. Please note it is unclear what air flow per blower each estimated power number is associated with in the table in Section 11629/11371, 2.1.B, as there are multiple combinations and blowers online that could be utilized. For simplicity and clarity, we have included guarantee power numbers per blower, as detailed above. Performance curves are included for each condition. Additional points can be provided, if required.

2. It is assumed that air flow values provided are scfm, defined at (14.67 psia, 68°F, 36% RH), This is the typical industry standard and in accordance with process manufacturer's air flow calculation. If this assumption is incorrect, please advise and we will reevaluate blower selection, accordingly.

Lone Star Blower

GL SERIES – GEARED TURBO PERFORMANCE CURVE

Project:	City of Surprise
Project Ref:	Alternative B, Option 2
Engineer:	Water Works
Date:	10/2/22 4:34 PM

Technology:	Geared Turbo
Selected Model:	GL8

	Units	Design	Alt Flow	Alt Flow	Alt Flow	Alt Flow	Alt Flow
Volume Flow at Inlet	ICFM	8,894.9	8,005.4	7,115.9	5,336.9	4,002.7	3,557.9
Specified Volume	Delivered SCFM	7,900	7,110	6,320	4,740	3,555	3,160
Capacity	%	100	90	80	60	45	40
Specified Flow defined at	*Pressure* 14.7 *PSIA*						
	Temperature 68 *°F*						
	Relative Humidity 36 *%*						
Inlet Temperature	°F	100	100	100	100	100	100
Relative Humidity	%	15	15	15	15	15	15
Barometric Pressure	PSIA	14.07	14.07	14.07	14.07	14.07	14.07
Inlet Pressure Losses	PSIG	0.20	0.20	0.20	0.20	0.20	0.20
Pressure at Inlet	PSIA	13.87	13.87	13.87	13.87	13.87	13.87
Pressure at Discharge	PSIG	5.50	5.50	5.30	5.20	5.10	5.10
Total Delta Pressure	PSIG	5.70	5.70	5.50	5.40	5.30	5.30
Temperature at Discharge	°F	167.56	166.30	164.98	164.05	163.99	168.33
Maximum Rise to Surge	PSIG	0.78					
Blower Speed	RPM	9181					
Gearbox Input Shaft Power	HP	247.09	220.20	194.00	147.84	115.03	110.12

City of Surprise - Alternative B, Option 2: P-V Curve & Shaft Power: Duty I : 100F/15%

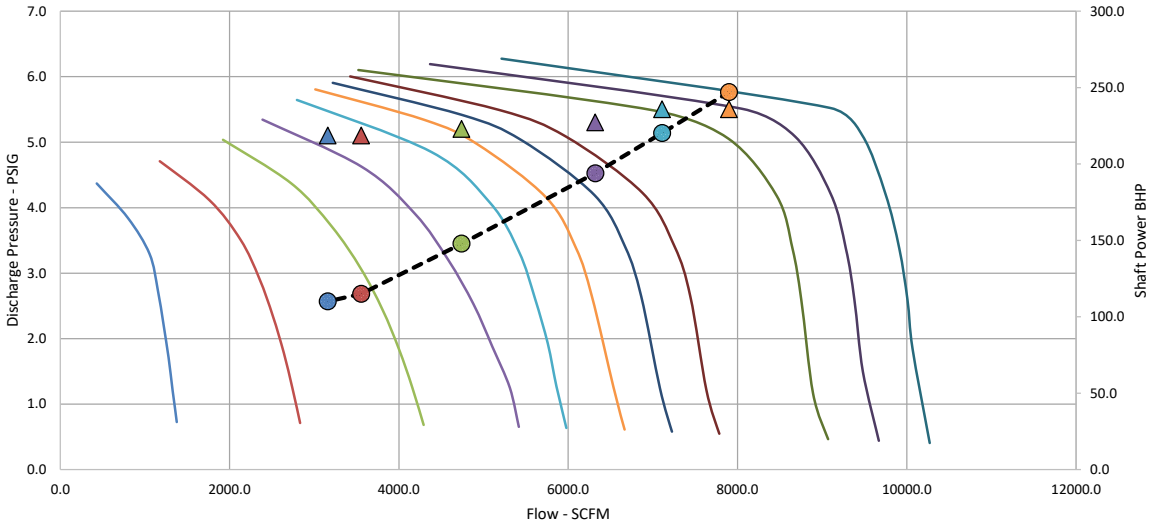

Lone Star Blower

GL SERIES – GEARED TURBO PERFORMANCE CURVE

Project:	City of Surprise
Project Ref:	Alternative B, Option 2
Engineer:	Water Works
Date:	10/2/22 4:34 PM

Technology:	Geared Turbo
Selected Model:	GL8

	Units	Alt Flow	Alt Flow	Alt Flow	Alt Flow	Alt Flow	Alt Flow
Volume Flow at Inlet	ICFM	8,515.5	7,663.9	6,812.4	5,109.3	3,832.0	3,406.2
Specified Volume	Delivered SCFM	7,900	7,110	6,320	4,740	3,555	3,160
Capacity	%	100	90	80	60	45	40
Specified Flow defined at	*Pressure* 14.7 *PSIA*						
	Temperature 68 *°F*						
	Relative Humidity 36 *%*						
Inlet Temperature	°F	75	75	75	75	75	75
Relative Humidity	%	40	40	40	40	40	40
Barometric Pressure	PSIA	14.07	14.07	14.07	14.07	14.07	14.07
Inlet Pressure Losses	PSIG	0.20	0.20	0.20	0.20	0.20	0.20
Pressure at Inlet	PSIA	13.87	13.87	13.87	13.87	13.87	13.87
Pressure at Discharge	PSIG	5.50	5.50	5.30	5.30	5.20	5.10
Total Delta Pressure	PSIG	5.70	5.70	5.50	5.50	5.40	5.30
Temperature at Discharge	°F	139.10	138.96	137.87	138.05	138.67	142.51
Maximum Rise to Surge	PSIG	1.10					
Blower Speed	RPM	9181					
Gearbox Input Shaft Power	HP	235.79	213.47	188.66	146.10	114.77	109.21

City of Surprise - Alternative B, Option 2: P-V Curve & Shaft Power: Duty II : 75F/40%

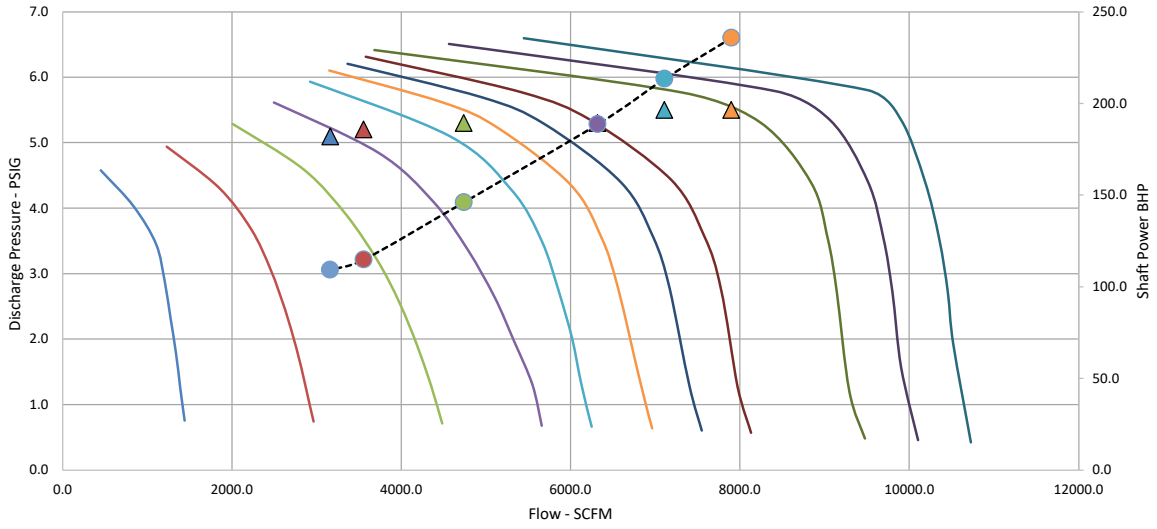

Lone Star Blower

GL SERIES – GEARED TURBO PERFORMANCE CURVE

Project:	City of Surprise
Project Ref:	Alternative B, Option 2
Engineer:	Water Works
Date:	10/2/22 4:34 PM

Technology:	Geared Turbo
Selected Model:	GL8

	Units	Alt Flow	Alt Flow	Alt Flow	Alt Flow	Alt Flow	Alt Flow
Volume Flow at Inlet	ICFM	7,989.7	7,190.7	6,391.8	4,793.8	3,595.4	3,195.9
Specified Volume	Delivered SCFM	7,900	7,110	6,320	4,740	3,555	3,160
Capacity	%	100	90	80	60	45	40
Specified Flow defined at	*Pressure* *14.7 PSIA*						
	Temperature *68 °F*						
	Relative Humidity *36 %*						
Inlet Temperature	°F	45	45	45	45	45	45
Relative Humidity	%	60	60	60	60	60	60
Barometric Pressure	PSIA	14.07	14.07	14.07	14.07	14.07	14.07
Inlet Pressure Losses	PSIG	0.20	0.20	0.20	0.20	0.20	0.20
Pressure at Inlet	PSIA	13.87	13.87	13.87	13.87	13.87	13.87
Pressure at Discharge	PSIG	5.50	5.50	5.30	5.20	5.10	5.10
Total Delta Pressure	PSIG	5.70	5.70	5.50	5.40	5.30	5.30
Temperature at Discharge	°F	107.65	107.46	106.87	106.01	106.15	111.51
Maximum Rise to Surge	PSIG	1.56					
Blower Speed	RPM	9181					
Gearbox Input Shaft Power	HP	229.36	207.54	184.75	141.03	110.22	107.22

City of Surprise - Alternative B, Option 2: P-V Curve & Shaft Power: Duty III : 45F/60%

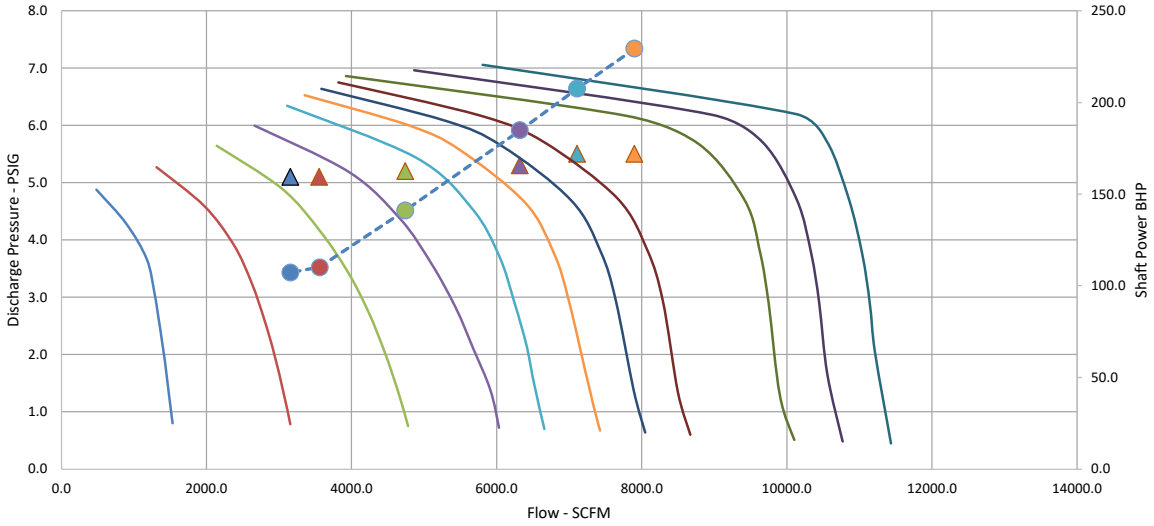

Lone Star Blower

GL SERIES – GEARED TURBO PERFORMANCE CURVE

			Project:	City of Surprise
			Project Ref:	Alternative B, Option 2
Technology:	Geared Turbo		Engineer:	Water Works
Selected Model:	GL8	25280	Date:	10/4/22 1:54 PM

	Units	Alt Flow	Alt Flow	Alt Flow	Alt Flow	Alt Flow	Alt Flow
Volume Flow at Inlet	ICFM	7,901.8	7,111.6	6,321.4	4,741.1	3,555.8	3,160.7
Specified Volume	Delivered SCFM	7,900	7,110	6,320	4,740	3,555	3,160
Capacity	%	100	90	80	60	45	40
Specified Flow defined at	*Pressure* *14.7 PSIA*						
	Temperature *68 °F*						
	Relative Humidity *36 %*						
Inlet Temperature	°F	40	40	40	40	40	40
Relative Humidity	%	60	60	60	60	60	60
Barometric Pressure	PSIA	14.07	14.07	14.07	14.07	14.07	14.07
Inlet Pressure Losses	PSIG	0.20	0.20	0.20	0.20	0.20	0.20
Pressure at Inlet	PSIA	13.87	13.87	13.87	13.87	13.87	13.87
Pressure at Discharge	PSIG	5.50	5.50	5.30	5.30	5.10	5.10
Total Delta Pressure	PSIG	5.70	5.70	5.50	5.50	5.30	5.30
Temperature at Discharge	°F	102.44	102.26	101.00	101.85	104.61	106.32
Maximum Rise to Surge	PSIG	1.64					
Blower Speed	RPM	9181					
Gearbox Input Shaft Power	HP	228.41	206.69	182.18	142.60	115.44	106.85

*The stated blower performance is stated with a +/- 0% tolerance

City of Surprise - Alternative B, Option 2: P-V Curve & Shaft Power: Duty II : 40F/60%

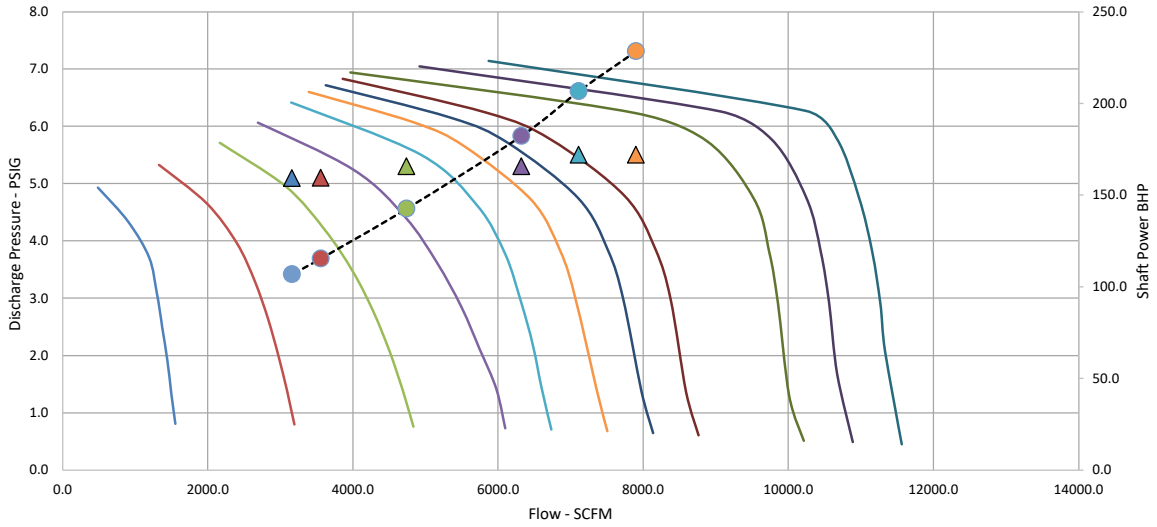

Lone Star Blower

GL SERIES – GEARED TURBO PERFORMANCE CURVE

Project:	City of Surprise
Project Ref:	Alternative B, Option 2
Engineer:	Water Works
Date:	10/4/22 1:54 PM

Technology:	Geared Turbo
Selected Model:	GL8

	Units	Alt Flow	Alt Flow	Alt Flow	Alt Flow	Alt Flow	Alt Flow
Volume Flow at Inlet	ICFM	7,888.1	7,099.3	6,319.5	4,732.9	3,549.7	3,155.2
Specified Volume	Delivered SCFM	7,900	7,110	6,320	4,740	3,555	3,160
Capacity	%	100	90	80	60	45	40
Specified Flow defined at	*Pressure* *14.7 PSIA*						
	Temperature *68 °F*						
	Relative Humidity *36 %*						
Inlet Temperature	°F	40	40	40	40	40	40
Relative Humidity	%	40	40	40	40	40	40
Barometric Pressure	PSIA	14.07	14.07	14.07	14.07	14.07	14.07
Inlet Pressure Losses	PSIG	0.20	0.20	0.20	0.20	0.20	0.20
Pressure at Inlet	PSIA	13.87	13.87	13.87	13.87	13.87	13.87
Pressure at Discharge	PSIG	5.50	5.50	5.30	5.20	5.10	5.10
Total Delta Pressure	PSIG	5.70	5.70	5.50	5.40	5.30	5.30
Temperature at Discharge	°F	102.48	102.30	101.03	101.47	104.67	106.38
Maximum Rise to Surge	PSIG	1.65					
Blower Speed	RPM	9181					
Gearbox Input Shaft Power	HP	228.13	206.43	181.94	141.57	119.20	106.75

City of Surprise - Alternative B, Option 2: P-V Curve & Shaft Power: Duty III : 40F/40%

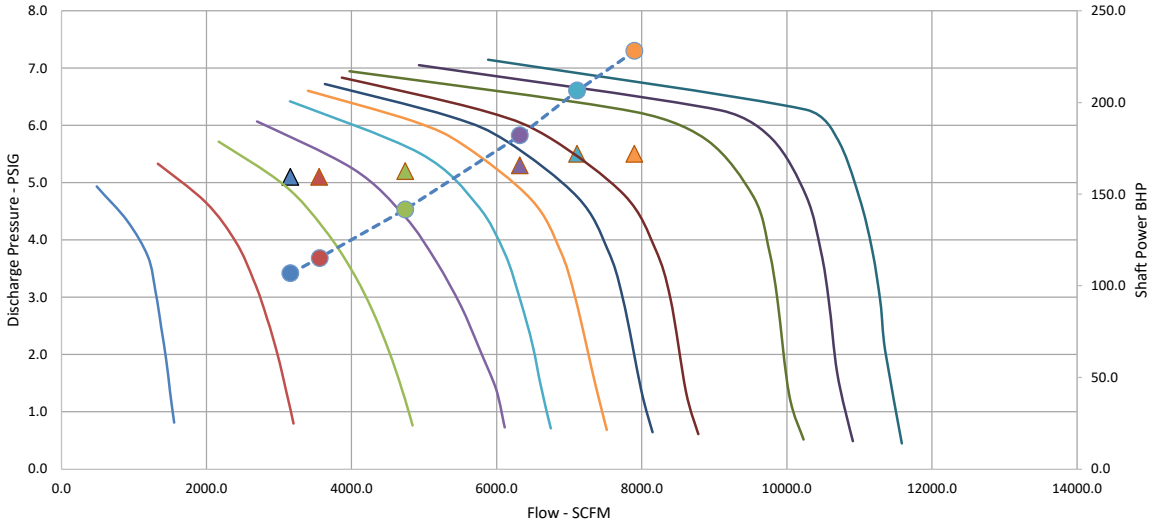

Lone Star Blower

GL SERIES – GEARED TURBO PERFORMANCE CURVE

Project:	City of Surprise
Project Ref:	Alternative B, Option 2
Engineer:	Water Works
Date:	10/2/22 4:37 PM

Technology:	Geared Turbo
Selected Model:	GL8

	Units	Alt Flow	Alt Flow	Alt Flow	Alt Flow	Alt Flow	Alt Flow
Volume Flow at Inlet	ICFM	9,048.6	8,143.7	7,238.9	5,429.1	4,071.9	3,619.4
Specified Volume	Delivered SCFM	7,900	7,110	6,320	4,740	3,555	3,160
Capacity	%	100	90	80	60	45	40
Specified Flow defined at	*Pressure* 14.7 *PSIA*						
	Temperature 68 *°F*						
	Relative Humidity 36 *%*						
Inlet Temperature	°F	100	100	100	100	100	100
Relative Humidity	%	40	40	40	40	40	40
Barometric Pressure	PSIA	14.07	14.07	14.07	14.07	14.07	14.07
Inlet Pressure Losses	PSIG	0.20	0.20	0.20	0.20	0.20	0.20
Pressure at Inlet	PSIA	13.87	13.87	13.87	13.87	13.87	13.87
Pressure at Discharge	PSIG	5.50	5.50	5.30	5.20	5.10	5.10
Total Delta Pressure	PSIG	5.70	5.70	5.50	5.40	5.30	5.30
Temperature at Discharge	°F	167.72	166.73	164.13	164.30	166.69	167.76
Maximum Rise to Surge	PSIG	0.73					
Blower Speed	RPM	9181					
Gearbox Input Shaft Power	HP	252.27	225.61	195.17	150.99	119.20	111.19

City of Surprise - Alternative B, Option 2: P-V Curve & Shaft Power: Duty III : 100F/40%

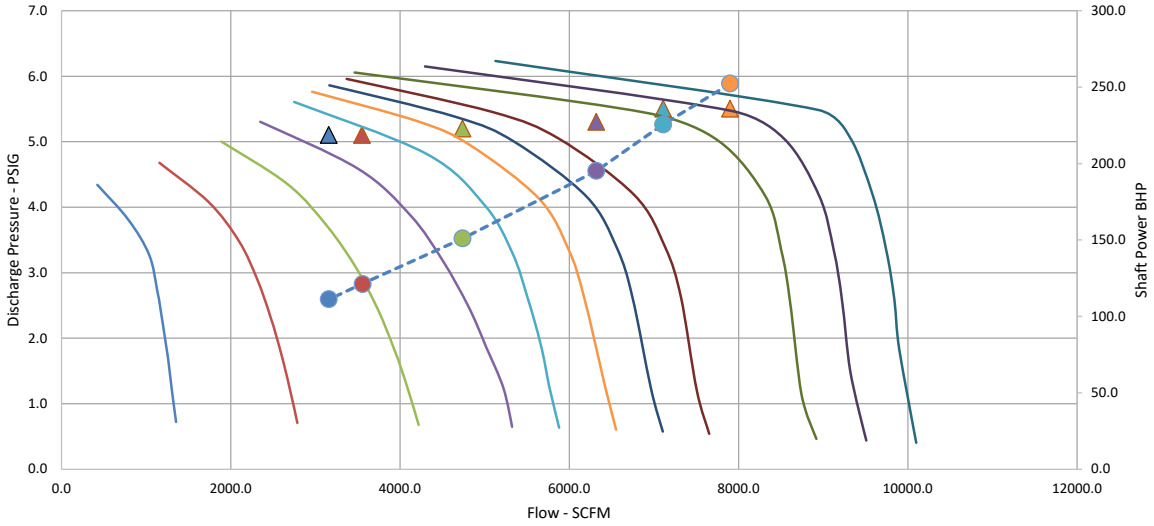

REVISION HISTORY			
REV	DESCRIPTION	DATE	APPROVED
1	AIR OUTLET VERTICALLY UP	5/27/2016	
2	RENAMED DWG FROM GL8-WX-03 TO GL8-WX-01, CONVERTED FROM mm TO INCHES	7/11/2016	

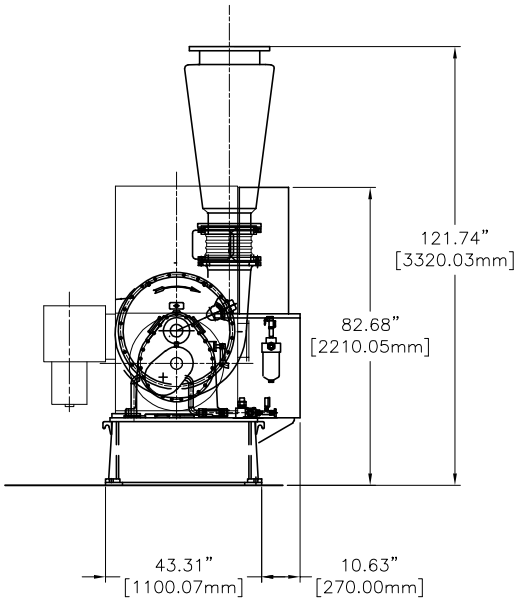

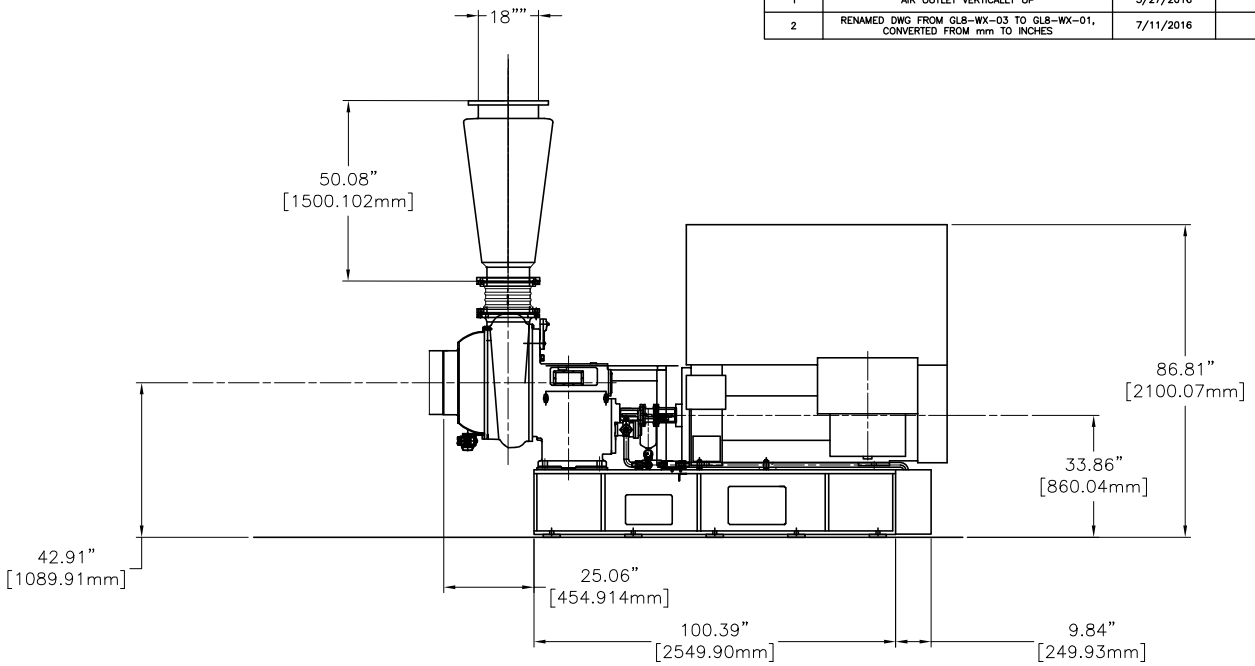

N

D **r** **d** **r** **d** **d** **r**

E **d** **d** **r** **d**

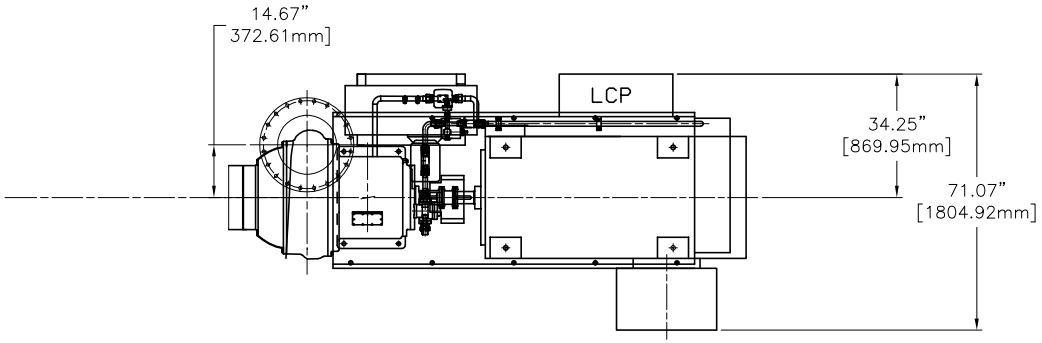

DRAWING IS FOR REFERENCE ONLY UNLESS SPECIFIED AS RELEASED.

APPROVALS		
DRAWN	BW	07/011/2016
CHECK		
ENGINEER		
MANUFACTURING		
CONTROL		
APPROVED		

THIRD ANGLE PROJECTION

LONE STAR BLOWER

TITLE
GL-8 GEARED TURBO
GENERAL ASSEMBLY 18" CONE

SIZE	CAGE CODE	DWG NUMBER	REV
A	-	GL8-WX-01	02
SCALE		SHEET 1 OF 1	

BILL OF MATERIALS			
ITEM NO.	PART NUMBER	QTY.	DESCRIPTION
1	N/A	1	BLOWER,
2	2000600001	1	PUMP, OIL, AUX, TOP-N350HVB, NIPPON
3	1000976003	2	ACTUATOR, GUIDE VANE, 110 V, RCEL-009L
4	TBD	1	SKID
5	TBD	1	MOTOR, ELECTRIC
6	TBD	1	COUPLING, DISC, XTSR71-1088, REXNORD
7	2000600056	8	ISOLATOR, GL, VIBRATION, ASMR-1E-1400
8	2000600014	3	MAGNET, GL, OIL TANK, CERAMIC, 99N005
9	2000300030	1	FILL CAP, GL, SKID MAIN OIL CIRCUIT, LENZ, FCS-557
10	2002000009	1	AUX PUMP SUB ASSY(LESS PUMP & MOTOR), GL1-GL20
11	1000900017	1	PUMP MOTOR, GL, 1LE1001-1AB42, SIEMENS
12	2002000000	1	ACTIVE DEMISTER SUB ASSY (LESS CHIMNEY), GL1-GL20
13	2000600088	1	DEMISTER CHIMNEY, ACTIVE, GL, 10.75", SKID
14	2000600036	1	PUMP, OIL, MECHANICAL, TOP-N340HVB, NIPPON
15	2000600002	1	FILTER, LF330, SKID
16	2000608081	1	BASE, GL8, GUARD, DISC
17	2000608082	1	GUARD, GL8, COUPLING, DISC
18	2000608083	1	FILTER MOUNT BRACKET, GL8
19	TBD	1	OIL COOLER, GL, WATER,
20	2000600007	1	OIL HEATER, 480V, SRY6-5
21	TBD	1	MOUNT, LCP
22	1000976067	1	TEMP PROBE, RTD, 6", 1/4" MNPT, -200/600°C, TH11-F2CAB31AK1, ENDRESS HAUSER
23	1000976050	1	PRESSURE SENSOR, 1/4" MNPT, 0-30 PSIA, PTP31B-AA7M2KGFVUJ, ENDRESS HAUSER
24	1000976056	1	PRESSURE SENSOR, 1/4" MNPT, 0-30 PSIG, PTP31B-AA7M1KGFVUJ, ENDRESS HAUSER
25	1000976085	1	TEMP PROBE, RTD, 9", 1/4" MNPT, -50/200°C, TH11-F3CAB31AK1, ENDRESS HAUSER
26	1000976066	1	TEMP PROBE, RTD, 12", 1/4" MNPT, -50/200°C, TH11-F4CAB31AK1, ENDRESS HAUSER
27	1000976058	1	TEMP PROBE, RTD, 30mm, 1/4" MNPT, TTR31-A1C11UDA1AAB, ENDRESS HAUSER
28	1000976057	1	PRESSURE SWITCH, 1/4" MNPT, 0-60 PSIG, PTP31B-AA7M1MGFVUJ, ENDRESS HAUSER
29	1000976071	1	TRANSDUCER, PRESSURE, 1/8", 100 PSI, GC55-7-F01-42-CG-100, ASHCROFT
30	1000976073	1	SURGE SENSOR, IGC209, IFM
31	1000976025	1	ZERO SPEED SENSOR, TURCK BI 5-M18E-RP6X-H1143, GEARBOX
32	1000976097	2	PROXIMITY PROBE, M10 x 1, 200mm, 1 METER ARMORED CABLE, WL-142K05T-M200202/NB1, SHINKAWA
33	1000976096	1	PROXIMITY PROBE, M10 x 1, 120mm, 1 METER ARMORED CABLE, WL-142K05T-M200122/NB1, SHINKAWA
34	1000976098	3	EXTENSION CABLE, ARMORED, 4 METER, WW-142KT-1/NB1, SHINKAWA
35	1000976076	4	INSTRUMENT CABLE, M12, 90 DEGREE, 10 METER, EVC009, IFM
36	1000976042	1	INSTRUMENT CABLE, M12, STRAIGHT, 10 METER, EVC003, IFM
37	1000976035	1	CURRENT TRANSMITTER, 0-300 AMP, H221, HAWKEYE
38	2000600009	1	LEVEL GAUGE, GL, OIL TANK, 1111K28, 1/2" MNPTF
39	1000976033	1	DP TRANSMITTER, AIR FILTER, 0-5 IN WC, MS2-W102-LCD, DWYER
40	2002008001	1	ASSEMBLY, SKID MAIN OIL CIRCUIT, GL8-20 , LOCAL AIR COOLED
41	N/A	1	FLEXIBLE CONNECTOR
42	N/A	1	DISCHARGED CONE
43	N/A	1	LCP
44	N/A	1	INLET FILTER

PART #	MATERIAL SPECIFICATION	WEIGHT (lb)
2001200018		

REVISION HISTORY				
REFERENCE DOC	REV	DESCRIPTION	DATE	APPROVED
	0			

N
S dr r r

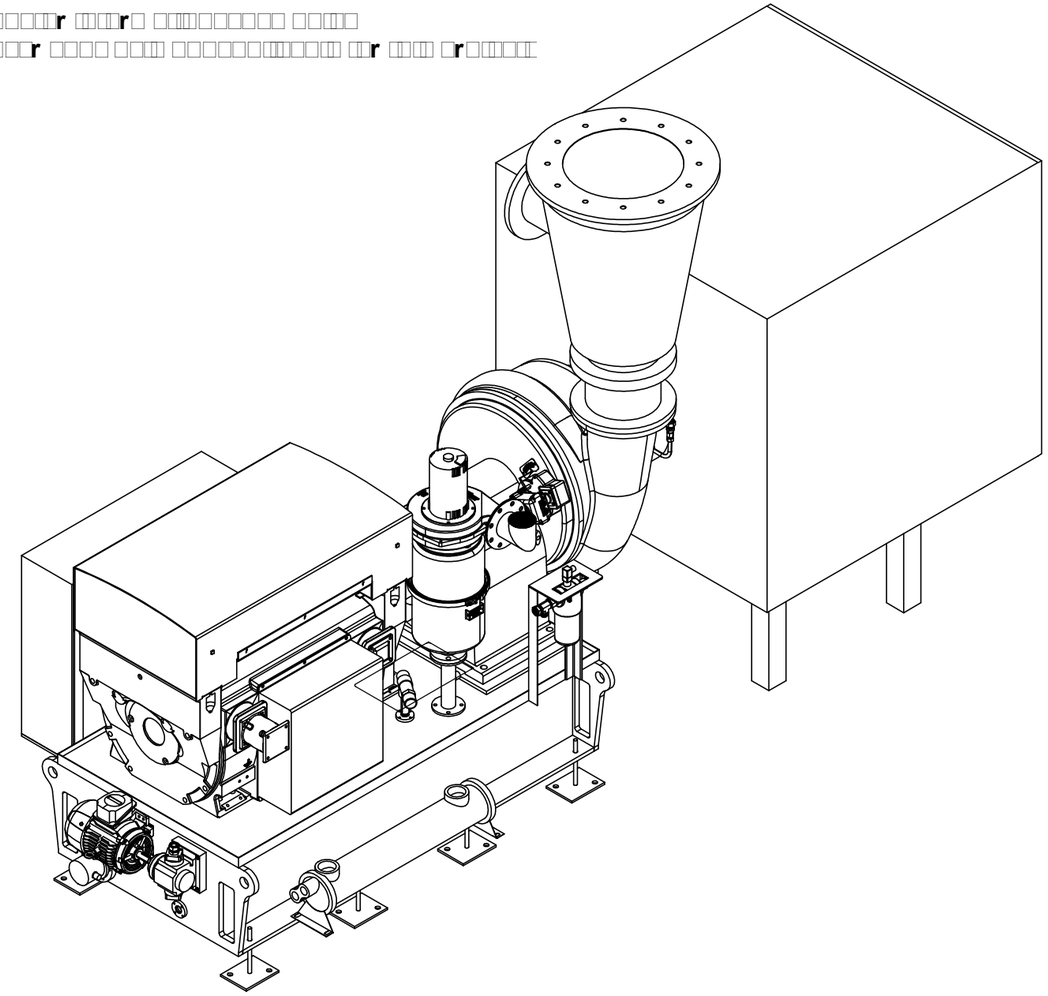

INTERPET ALL GEOMETRIC DIMENSIONING AND TOLERANCING TO ASME Y14.5	DRAWING IS FOR REFERENCE ONLY UNLESS SPECIFIED AS APPROVED
ALL DIMENSIONS ARE IN INCHES UNLESS OTHERWISE SPECIFIED	THE INFORMATION CONTAINED IN THIS DRAWING IS THE SOLE PROPERTY OF LONE STAR BLOWER. ANY REPRODUCTION IN PART OR AS A WHOLE WITHOUT THE WRITTEN PERMISSION OF LONE STAR BLOWER IS PROHIBITED.
STANDARD TOLERANCES .X ±.015 .XX ±.010 .XXX ±.005 X/X ±1/16 ANGLES ± 1°	DRAWN BY TS — DATE 09/20/2022 CHECKED BY — DATE APPROVED BY — DATE
REMOVE BURRS AND BREAK ALL SHARP EDGES MACHINED SURFACES 125	THIRD ANGLE PROJECTION

LONE STAR

GENERAL ARRANGEMENT, 5010/5011, LOCAL WAT COOLED, W/ MOUNTED LCP

SIZE	DWG. NO.	REV
B	2008000261	0
SCALE: 1:25	DO NOT SCALE	SHEET 1 OF 4

REVISION HISTORY				
REFERENCE DOC	REV	DESCRIPTION	DATE	APPROVED
	0			

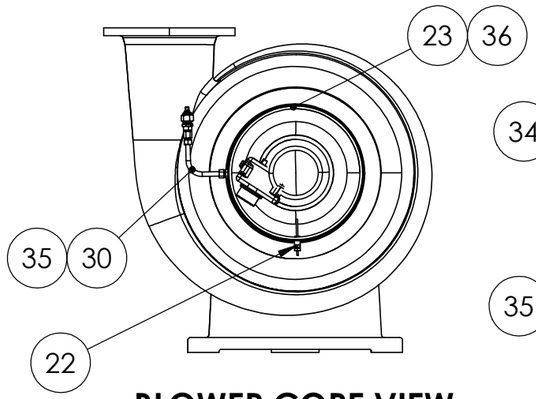

BLOWER CORE VIEW

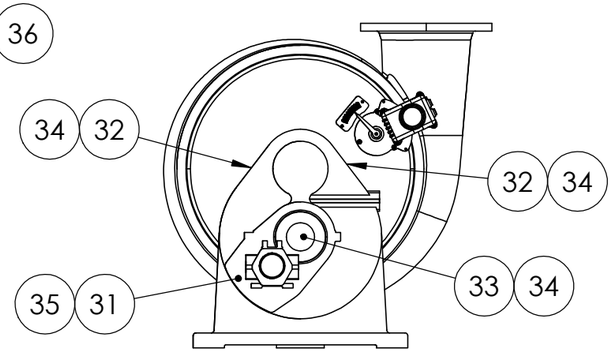

GEARBOX CORE VIEW

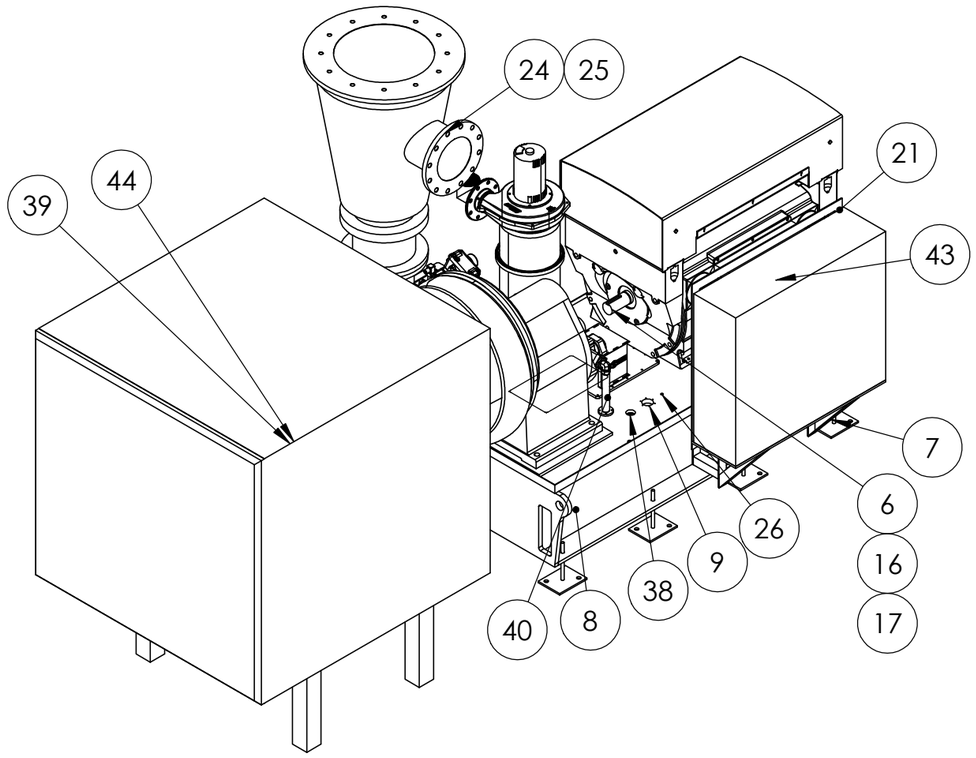

TOP BLOWER SIDE ISO VIEW

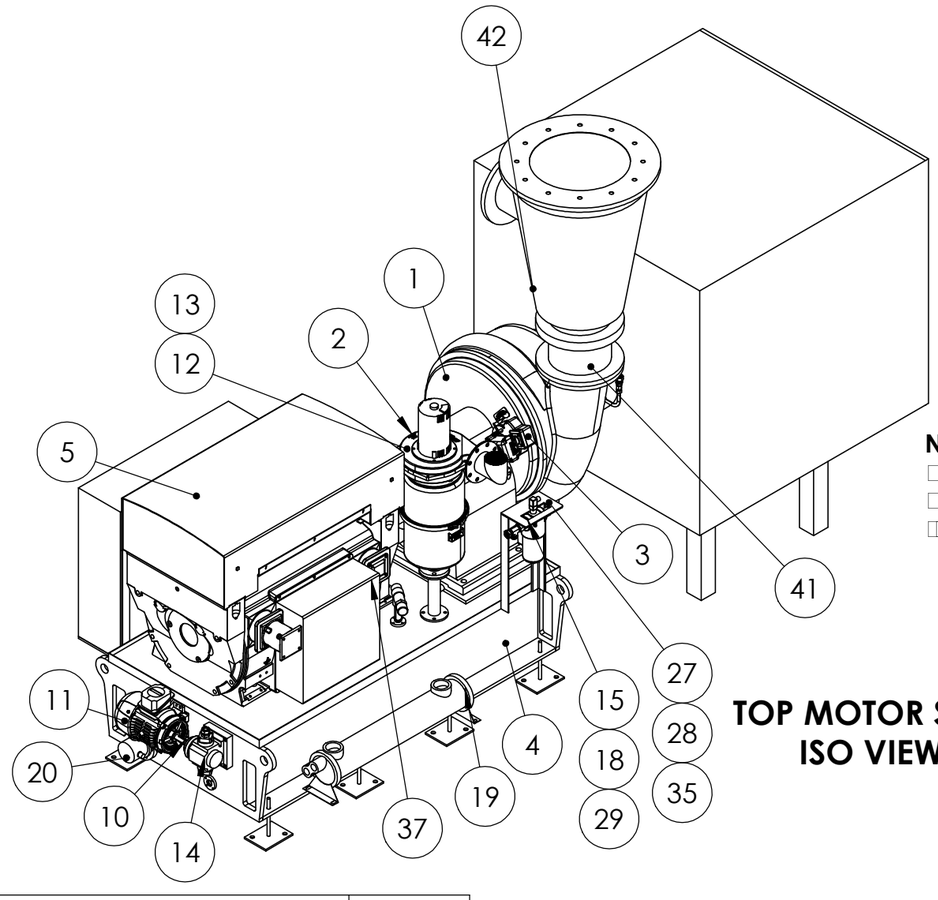

TOP MOTOR SIDE ISO VIEW

N
S **dr** **r** **r**

PART #	MATERIAL SPECIFICATION	WEIGHT (lb)
2001200018		

INTERPET ALL GEOMETRIC DIMENSIONING AND TOLERANCING TO ASME Y14.5	DRAWING IS FOR REFERENCE ONLY UNLESS SPECIFIED AS APPROVED
ALL DIMENSIONS ARE IN INCHES UNLESS OTHERWISE SPECIFIED	THE INFORMATION CONTAINED IN THIS DRAWING IS THE SOLE PROPERTY OF LONE STAR BLOWER. ANY REPRODUCTION IN PART OR AS A WHOLE WITHOUT THE WRITTEN PERMISSION OF LONE STAR BLOWER IS PROHIBITED.
STANDARD TOLERANCES .X ±.015 .XX ±.010 .XXX ±.005 X/X ±1/16 ANGLES ± 1°	DRAWN BY TS — DATE 09/20/2022 CHECKED BY — DATE APPROVED BY — DATE
REMOVE BURRS AND BREAK ALL SHARP EDGES MACHINED SURFACES 125	THIRD ANGLE PROJECTION

LONE STAR

GENERAL ARRANGEMENT, GL8, 5010/5011, LOCAL WATER COOLED, W/ MOUNTED LCP

SIZE	DWG. NO.	REV
B	2008000261	0
SCALE: 1:30	DO NOT SCALE	SHEET 2 OF 4

SURPRISE
ARIZONA

CITY OF SURPRISE
PUBLIC WORKS DEPARTMENT
SPA 1 WRF CAPACITY EXP FACILITY RERATING

11401 N 136TH AVENUE, SURPRISE AZ
TOWNSHIP 3N, RANGE 1W, SECTION 22

SEPTEMBER 2022

VOLUME 1 OF 1

BLOWER PROCUREMENT SET

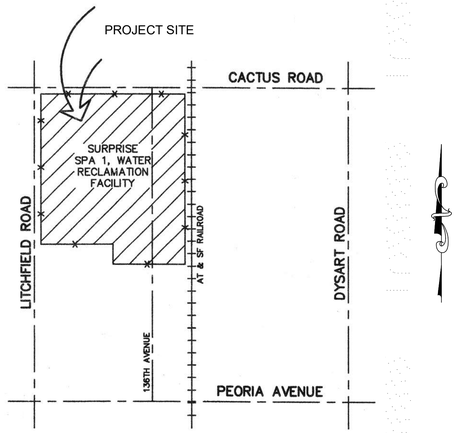

VICINITY MAP
NTS

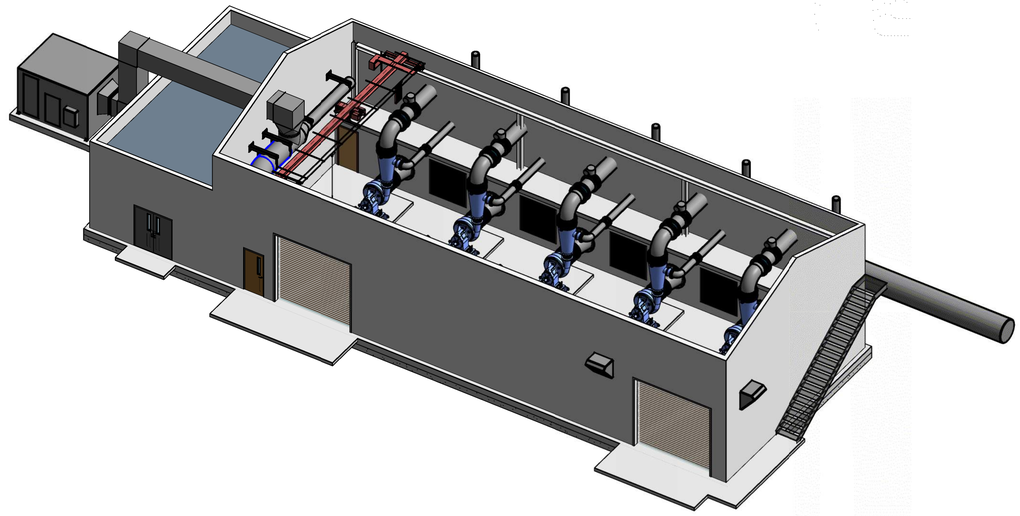

THESE PLANS ARE FOR OFFICIAL USE ONLY AND MAY NOT BE SHARED WITH OTHERS EXCEPT AS REQUIRED TO FULLFILL THE OBLIGATIONS OF YOUR CONTRACT WITH THE CITY OF SURPRISE.

ALL MATERIAL COMING IN CONTACT WITH POTABLE WATER MUST MEET NSF STANDARDS 6 & 61 IN ACCORDANCE WITH R18-4-213

CITY PROJECT MANAGER

CITY OF SURPRISE
16000 N. CIVIL PLAZA
SURPRIZE AZ, 85374

PHONE: (623) 222-6130

CONTACT: REYNALDO ALDAVA

ENGINEER

WATERWORKS ENGINEERS
7500 N. DOBSON ROAD, SUITE 200
SCOTTSDALE, AZ 85256

PHONE: (480) 661-1742
FAX: (480) 661-1743

CONTACT: JOHN MATTA P.E.

APPROVALS

CITY OF SURPRISE SIGNATURE BLOCK

THIS SET OF PLANS HAS BEEN REVIEWED FOR COMPLIANCE WITH CITY REQUIREMENTS PRIOR TO ISSUANCE OF PERMITS. THE CITY NEITHER ACCEPTS NOR ASSUMES ANY LIABILITY FOR ERRORS OR OMISSIONS. THIS COMPLIANCE APPROVAL SHALL NOT PREVENT THE CITY ENGINEER FROM REQUIRING CORRECTIONS OF ERRORS OR OMISSIONS IN PLANS FOUND TO BE IN VIOLATION OF LAW OR ORDINANCES.

APPROVED: _____
CITY OF SURPRISE ENGINEER DATE

APPROVED: _____
MARICOPA COUNTY ENVIRONMENTAL SERVICES DEPARTMENT DATE

BLOWER

PROCUREMENT SPEC

NO.	REVISION	REV BY	CKD BY	DATE
-	-	-	-	-

SURPRISE ARIZONA

CITY OF SURPRISE
SPA 1 WRF CAPACITY EXP FACILITY RERATING

WATERWORKS ENGINEERS

FELIX CONSTRUCTION

GENERAL
COVER SHEET

CHECKED JHM
DRAWN MC
DESIGN DB

DATE
SEPTEMBER 2022

PROJECT NUMBER
20-018

DRAWING NUMBER
G-00-001

SHEET NO. 1 OF

REUSE OF DOCUMENTS: THIS DOCUMENT, AND THE IDEAS AND DESIGN INCORPORATED HEREIN, AS AN INSTRUMENT OF PROFESSIONAL SEVICE, IS THE PROPERTY OF WATER WORKS ENGINEERS, LLC. AND IS NOT TO BE USED, IN WHOLE OR PART, FOR ANY OTHER PROJECT WITHOUT THE WRITTEN AUTHORIZATION OE WATER WORKS ENGINEERS,LLC.

FILE PATH: BIM 360://20-018 SPA 1 WRF Capacity Exp Facility Rerating/2018D-M-Blower Building.rvt

DATE AND TIME: 9/12/2022 4:27:46 PM

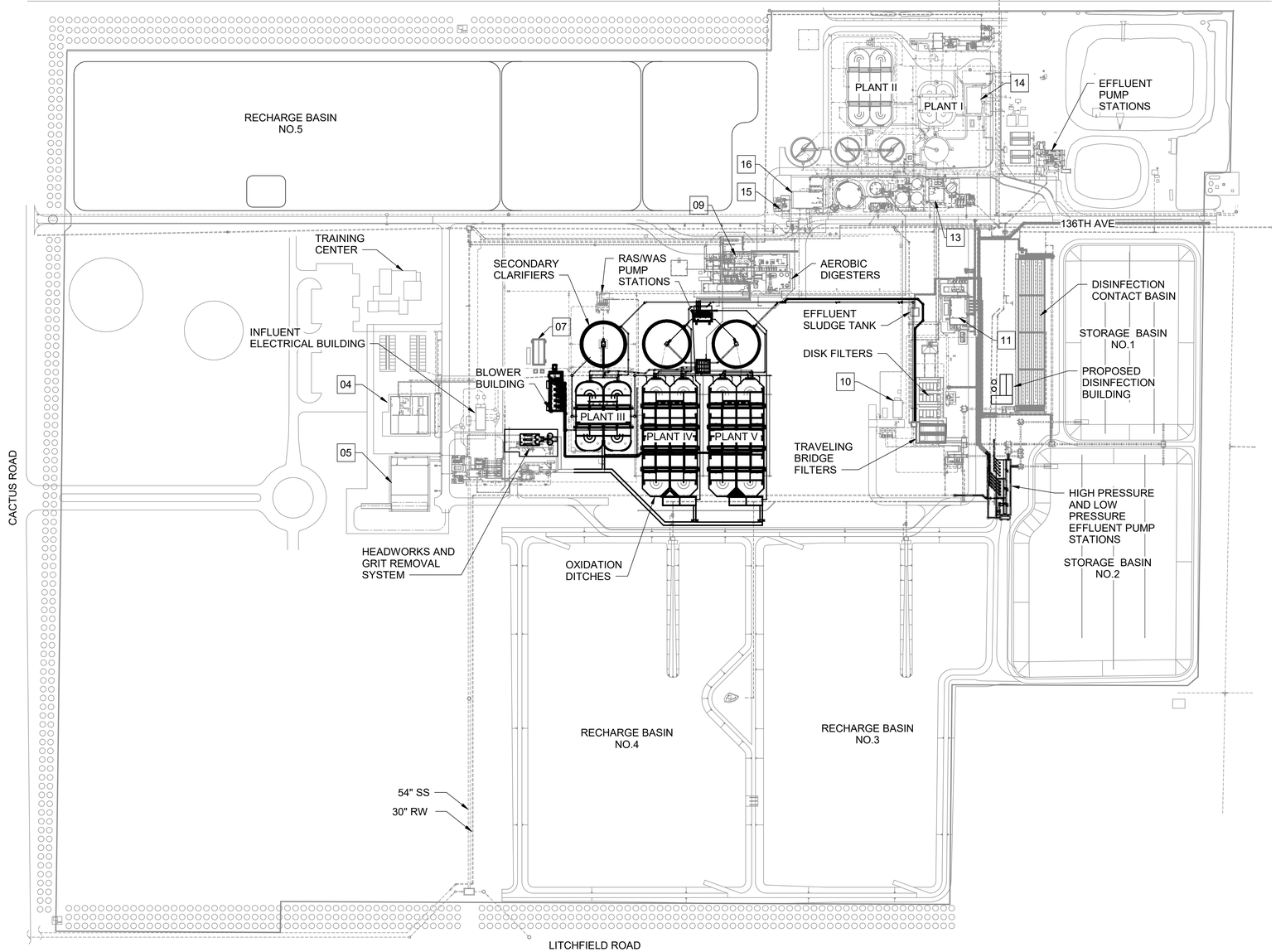

PLAN
1" = 160'-0"

NORTH

BUILDING ##

04	OPERATIONS BUILDING
05	MAINTENANCE BUILDING
07	OXIDATION ELECTRICAL BUILDING
09	THICKENING BUILDING
10	EFFLUENT ELECTRICAL BUILDING
11	DISINFECTION BUILDING
13	PLANTS I AND II THICKENING BUILDING
14	PLANTS I AND II ADMIN BUILDING
15	PLANTS IV AND V DEWATERING BUILDING
16	DEWATERING BUILDING

BLOWER

PROCUREMENT SPEC

160 0 160 320 FEET
SCALE 1"=160'

30% SUBMITTAL

NOT FOR CONSTRUCTION

NO.	REVISION	REV BY	CKD BY	DATE
1	-	-	-	-

SURPRISE
ARIZONA

CITY OF SURPRISE
SPA 1 WRF CAPACITY
EXP FACILITY
RERATING

WATER WORKS ENGINEERS

GENERAL

SPA1 WRF
MASTER SITE PLAN

CHECKED Checker
DRAWN Author
DESIGN Designer

DATE
AUGUST 2022

PROJECT NUMBER
20-018

DRAWING NUMBER
G-00-008

SHEET NO. 8 OF 31

REUSE OF DOCUMENTS: THIS DOCUMENT, AND THE IDEAS AND DESIGN INCORPORATED HEREIN, AS AN INSTRUMENT OF PROFESSIONAL SEVICE, IS THE PROPERTY OF WATER WORKS ENGINEERS, LLC. AND IS NOT TO BE USED, IN WHOLE OR PART, FOR ANY OTHER PROJECT WITHOUT THE WRITTEN AUTHORIZATION OE WATER WORKS ENGINEERS,LLC.

FILE PATH: BIM 360://20-018 SPA 1 WRF Capacity Exp Facility Rerating/2018D-M-Blower Building.rvt

DATE AND TIME: 8/11/2022 4:43:05 PM

NOTE: PROCESS AIR BLOWER NO 5 SHOWN FOR ALTERNATIVE B (300 HP)

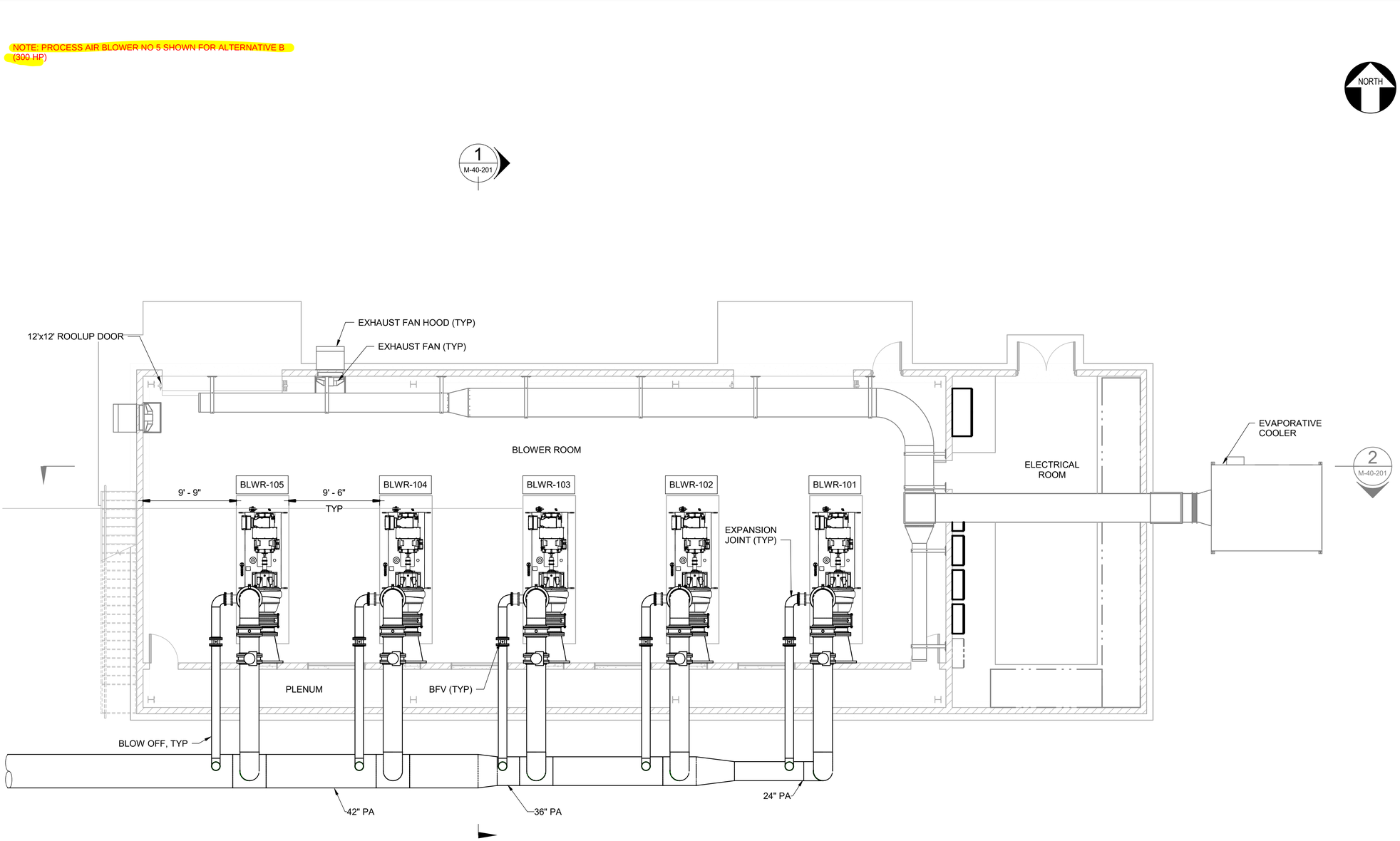

PLAN
3/16" = 1'-0"

4 0 4 8 FEET
SCALE 3/16"=1'-0"

NO.	REVISION	REV BY	CKD BY	DATE
-	-	-	-	-

SURPRISE ARIZONA

CITY OF SURPRISE
SPA 1 WRF CAPACITY
EXP FACILITY
RERATING

WATERWORKS ENGINEERS

FELIX CONSTRUCTION

MECHANICAL
BLOWER BUILDING
PLAN

CHECKED JHM
DRAWN MC
DESIGN DB

BLOWER
PROCUREMENT
SPEC

DATE: SEPTEMBER 2022
PROJECT NUMBER: 20-018
DRAWING NUMBER: M-40-101
SHEET NO. 24 OF

REUSE OF DOCUMENTS: THIS DOCUMENT, AND THE IDEAS AND DESIGN INCORPORATED HEREIN, AS AN INSTRUMENT OF PROFESSIONAL SEVICE, IS THE PROPERTY OF WATER WORKS ENGINEERS, LLC. AND IS NOT TO BE USED, IN WHOLE OR PART, FOR ANY OTHER PROJECT WITHOUT THE WRITTEN AUTHORIZATION OE WATER WORKS ENGINEERS,LLC.

FILE PATH: BIM 360://20-018 SPA 1 WRF Capacity Exp Facility Rerating/2018D-M-Blower Building.rvt

DATE AND TIME: 9/12/2022 4:18:06 PM

NOTE: PROCESS AIR BLOWER NO 5 SHOWN FOR ALTERNATIVE B (300 HP)

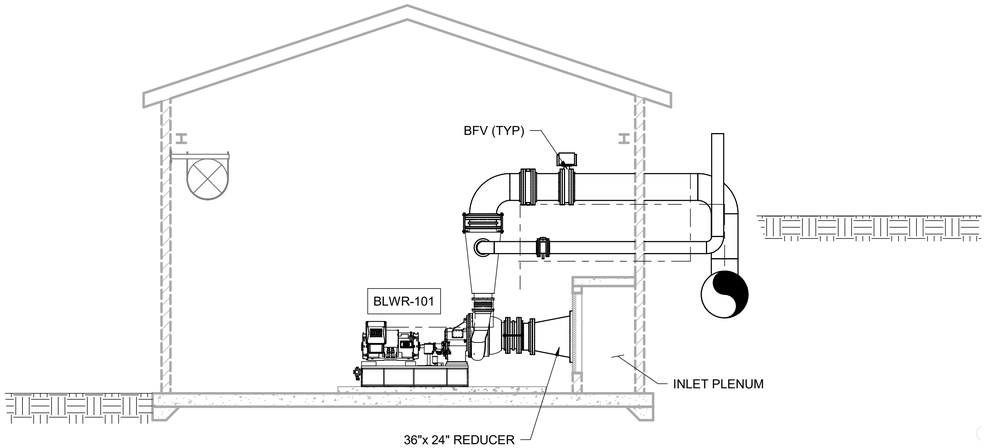

1 SECTION
M-40-101 3/16" = 1'-0"

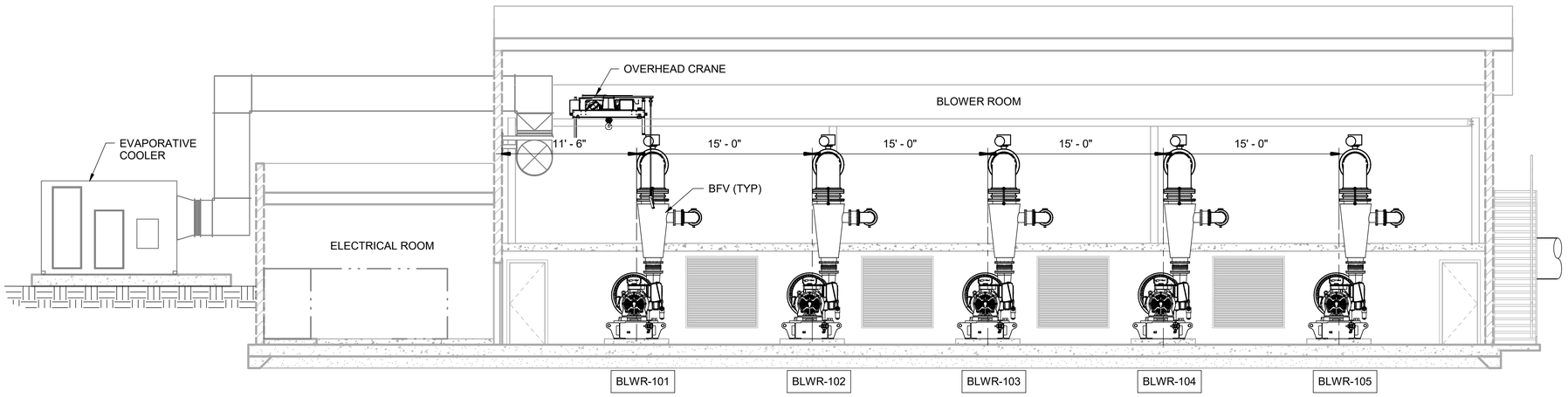

2 SECTION
H-40-101 3/16" = 1'-0"

4 0 4 8 FEET
SCALE 3/16"=1'-0"

NO.	REVISION	REV BY	CKD BY	DATE
-	-	-	-	-

SURPRISE ARIZONA

CITY OF SURPRISE
SPA 1 WRF CAPACITY EXP FACILITY RERATING

WATERWORKS ENGINEERS

FELIX CONSTRUCTION

MECHANICAL
BLOWER BUILDING SECTIONS

CHECKED JHM
DRAWN MC
DESIGN DB

BLOWER

PROCUREMENT SPEC

DATE: SEPTEMBER 2022
PROJECT NUMBER 20-018
DRAWING NUMBER M-40-201
SHEET NO. 25 OF

REUSE OF DOCUMENTS: THIS DOCUMENT, AND THE IDEAS AND DESIGN INCORPORATED HEREIN, AS AN INSTRUMENT OF PROFESSIONAL SEVICE, IS THE PROPERTY OF WATER WORKS ENGINEERS, LLC. AND IS NOT TO BE USED, IN WHOLE OR PART, FOR ANY OTHER PROJECT WITHOUT THE WRITTEN AUTHORIZATION OE WATER WORKS ENGINEERS,LLC.

FILE PATH: BIM 360://20-018 SPA 1 WRF Capacity Exp Facility Rerating/2018D-M-Blower Building.rvt

DATE AND TIME: 9/12/2022 4:18:18 PM

BLOWER PROCURMENT PACKAGE NOTE:

ALTERNATIVE A (4) 350HP AIR BLOWER WITH VFD.

ALTERNATIVE B (5) 300HP AIR BLOWER WITH RVSS.

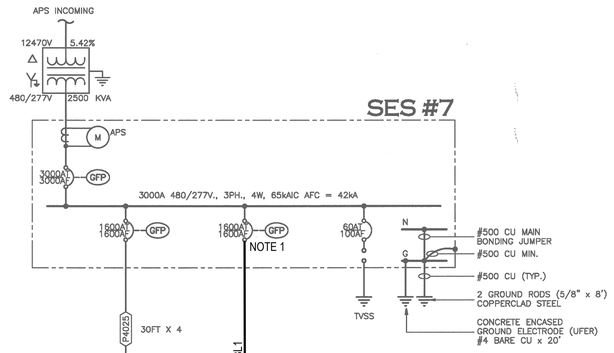

OXIDATION DITCH (OX) MOTOR CONTROL CENTER "MCC-OX-SB2"

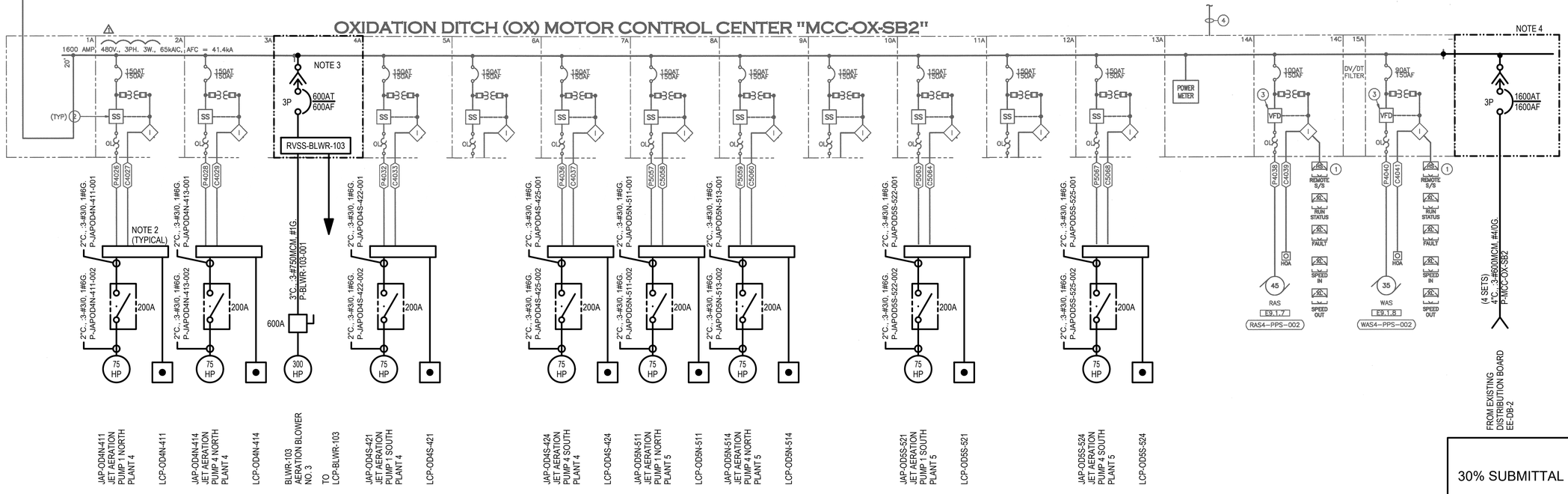

1 EXISTING MCC-OX-SB2 ONE-LINE DIAGRAM - NEW WORK

\- SCALE: NONE

GENERAL NOTE:

ALL EXISTING EQUIPMENT, FEEDERS, AND GROUNDING SYSTEM SHOWN ON THIS ONE-LINE ARE TO REMAIN EXISTING UNLESS NOTED OTHERWISE.

NOTES:

1. CONTRACTOR TO RE-USE EXISTING CIRCUIT BREAKER AT SES #7 FOR NEW POWER FEED TO NEW SWITCHBOARD. CONTRACTOR TO PROVIDE NEW LABEL AT EXISTING CUBICLE FOR NEW LOAD.
2. PROVIDE NEW 200A RATED LUGS AT EXISTING PULLBOX FOR CIRCUIT CONTINUITY OF EXISTING FEEDERS AND NEW FEEDERS.
3. PROVIDE NEW 600A BREAKER AND REVERSE VOLTAGE SOFT STARTER IN EXISTING MCC BUCKET.
4. PROVIDE NEW 1600A BUS SECTION TO EXISTING MCC. PROVIDE NEW CIRCUIT BREAKER WITH 65kAIC RATING.

30% SUBMITTAL

NOT FOR CONSTRUCTION

NO.	REVISION	REV BY	CKD BY	DATE
-	-	-	-	-

SURPRISE ARIZONA

CITY OF SURPRISE
SPA 1 WRF CAPACITY EXP
FACILITY RERATING

WATERWORKS ENGINEERS

ELECTRICAL

EXISTING MCC-OX-SB2 ONE-LINE DIAGRAM - NEW WORK

DESIGN ER | DRAWN CAY | CHECKED BGY

DATE JULY 2022

PROJECT NUMBER 20-018

DRAWING NUMBER E-00-102

SHEET NO. ###

REUSE OF DOCUMENTS: THIS DOCUMENT, AND THE IDEAS AND DESIGN INCORPORATED HEREIN, AS AN INSTRUMENT OF PROFESSIONAL SEVICE, IS THE PROPERTY OF WATER WORKS ENGINEERS, LLC. AND IS NOT TO BE USED, IN WHOLE OR PART, FOR ANY OTHER PROJECT WITHOUT THE WRITTEN AUTHORIZATION OE WATER WORKS ENGINEERS,LLC.

FILE PATH:C:\USERS\EDGARR\ACCDOCS\WATER WORKS ENGINEERS\20-018 SPA 1 WRF CAPACITY EXP FACILITY RERATING\PROJECT FILES\DRAWINGS\2018D-E-00-102.DWG

DATE AND TIME: 8/12/2022 3:22:10 PM

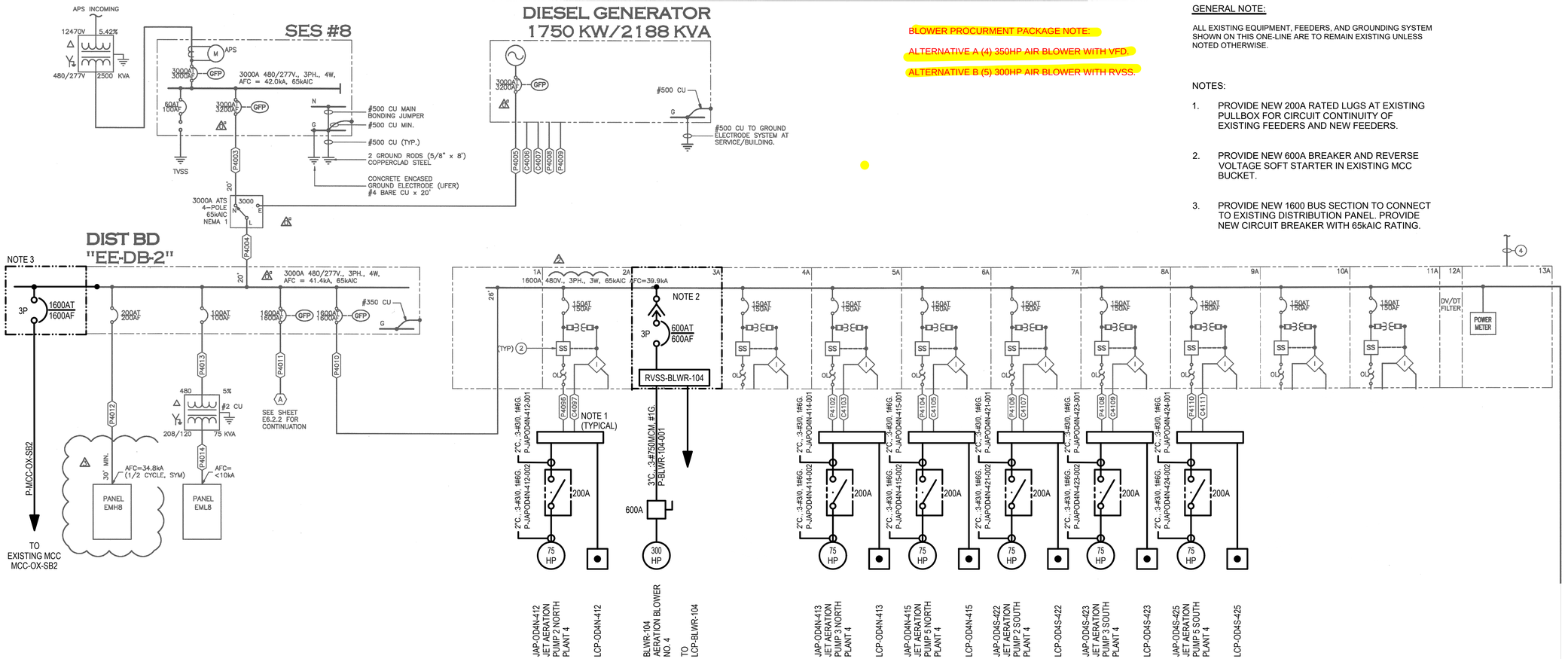

1 EXISTING MCC-OX4-EE ONE-LINE DIAGRAM - NEW WORK

SCALE: NONE

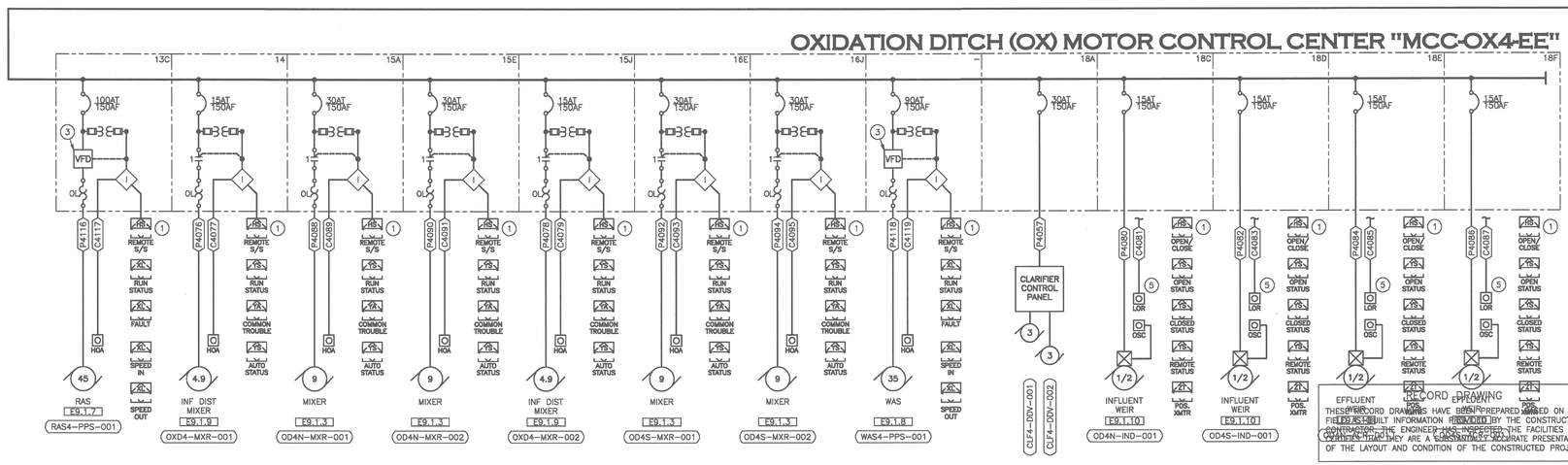

NOTES:
1. CONTRAC BREAKER NEW SWIT NEW LABE LOAD.
2. PROVIDE PULLBOX EXISTING
3. PROVIDE VOLTAGE BUCKET.

REV/BY CKD BY DATE

NO. REVISION

SURPRISE ARIZONA

CITY OF SURPRISE
SPA 1 WRF CAPACITY EXP
FACILITY RERATING

WATERWORKS ENGINEERS

30% SUBMITTAL

NOT FOR CONSTRUCTION

ELECTRICAL

EXISTING MCC-OX4-EE ONE-LINE DIAGRAM - NEW WORK

DESIGN ER | DRAWN CAY | CHECKED BGY

DATE JULY 2022

PROJECT NUMBER 20-018

DRAWING NUMBER E-00-103

SHEET NO. ###

REUSE OF DOCUMENTS: THIS DOCUMENT, AND THE IDEAS AND DESIGN INCORPORATED HEREIN, AS AN INSTRUMENT OF PROFESSIONAL SEVICE, IS THE PROPERTY OF WATER WORKS ENGINEERS, LLC. AND IS NOT TO BE USED, IN WHOLE OR PART, FOR ANY OTHER PROJECT WITHOUT THE WRITTEN AUTHORIZATION OE WATER WORKS ENGINEERS,LLC.

FILE PATH:C:\USERS\EDGARR\ACCDOCS\WATER WORKS ENGINEERS\20-018 SPA 1 WRF CAPACITY EXP FACILITY RERATING\PROJECT FILES\DRAWINGS\2018D-E-00-103.DWG

DATE AND TIME: 8/12/2022 3:22:10 PM

BLOWER PROCURMENT PACKAGE NOTE:

ALTERNATIVE A (4) 350HP AIR BLOWER WITH VFD.

ALTERNATIVE B (5) 300HP AIR BLOWER WITH RVSS.

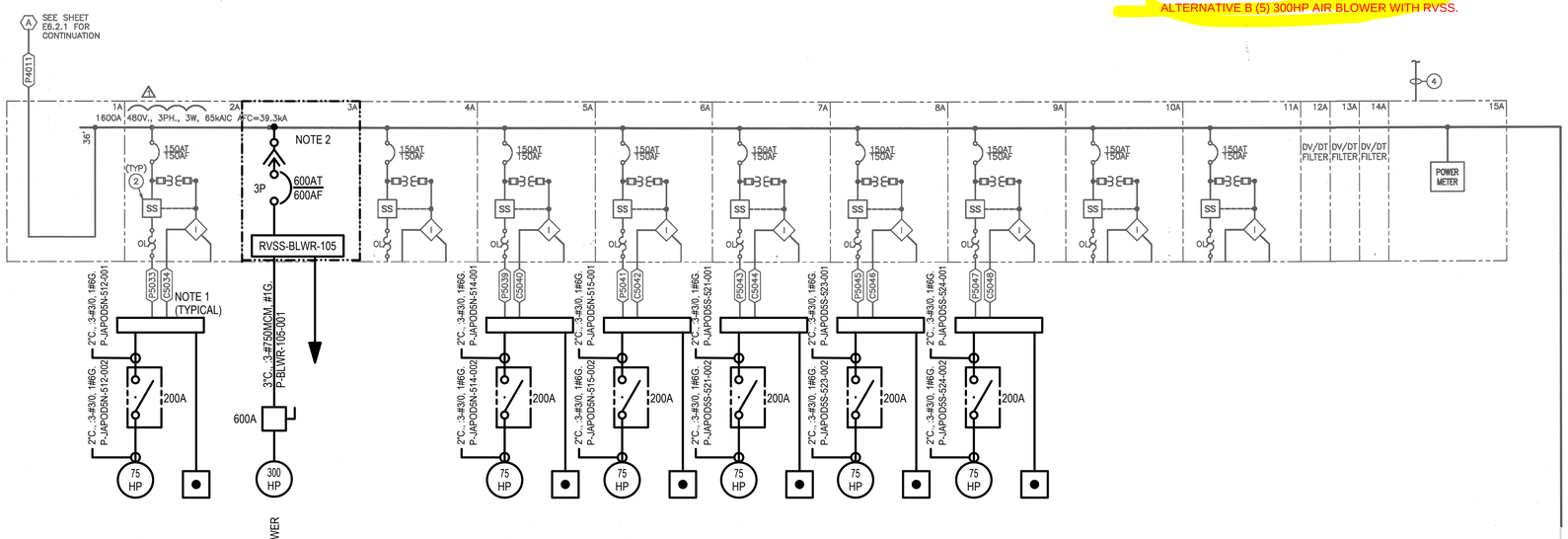

1 EXISTING MCC-OX5-EE ONE-LINE DIAGRAM - NEW WORK

\- SCALE: NONE

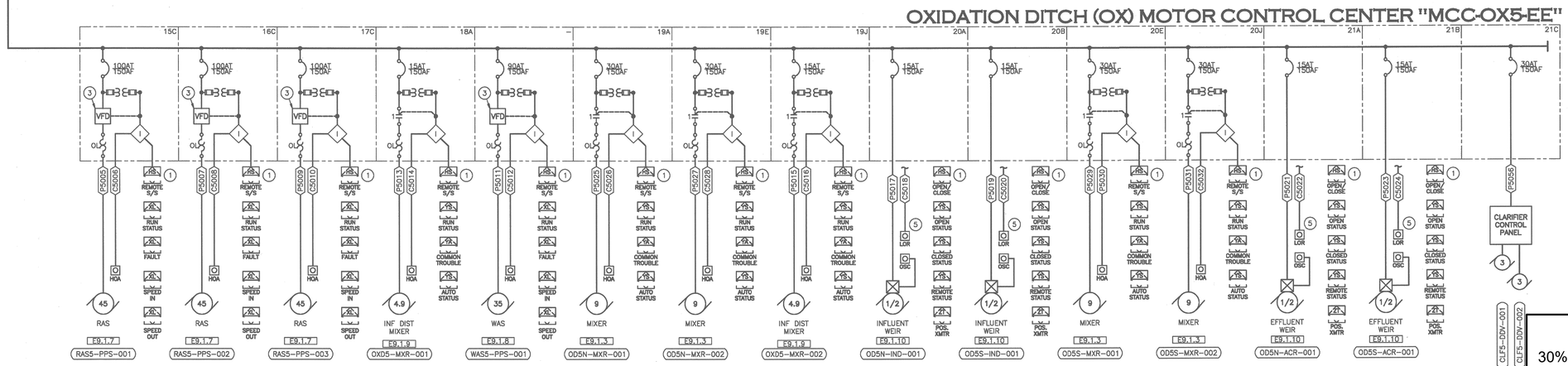

GENERAL NOTE:

ALL EXISTING EQUIPMENT, FEEDERS, AND GROUNDING SYSTEM SHOWN ON THIS ONE-LINE ARE TO REMAIN EXISTING UNLESS NOTED OTHERWISE.

NOTES:

1. PROVIDE NEW 200A RATED LUGS AT EXISTING PULLBOX FOR CIRCUIT CONTINUITY OF EXISTING FEEDERS AND NEW FEEDERS.
2. PROVIDE NEW 600A BREAKER AND REVERSE VOLTAGE SOFT STARTER IN EXISTING MCC BUCKET.

NO.	REVISION	REV BY	CKD BY	DATE
-	-	-	-	-

SURPRISE ARIZONA

CITY OF SURPRISE
SPA1 WRF CAPACITY EXP
FACILITY RERATING

WATER WORKS ENGINEERS

ELECTRICAL

EXISTING MCC-OX5-EE ONE-LINE DIAGRAM - NEW WORK

CHECKED BGY
DRAWN CAY
DESIGN ER

30% SUBMITTAL

NOT FOR CONSTRUCTION

DATE JULY 2022

PROJECT NUMBER 20-018

DRAWING NUMBER E-00-104

SHEET NO. ###

REUSE OF DOCUMENTS: THIS DOCUMENT, AND THE IDEAS AND DESIGN INCORPORATED HEREIN, AS AN INSTRUMENT OF PROFESSIONAL SEVICE, IS THE PROPERTY OF WATER WORKS ENGINEERS, LLC. AND IS NOT TO BE USED, IN WHOLE OR PART, FOR ANY OTHER PROJECT WITHOUT THE WRITTEN AUTHORIZATION OE WATER WORKS ENGINEERS,LLC.

FILE PATH:C:\USERS\EDGARR\ACCDOCS\WATER WORKS ENGINEERS\20-018 SPA 1 WRF CAPACITY EXP FACILITY RERATING\PROJECT FILES\DRAWINGS\2018D-E-00-104.DWG

DATE AND TIME: 8/12/2022 3:22:10 PM

BLOWER PROCURMENT PACKAGE NOTE:

ALTERNATIVE A (4) 350HP AIR BLOWER WITH VFD.

ALTERNATIVE B (5) 300HP AIR BLOWER WITH RVSS.

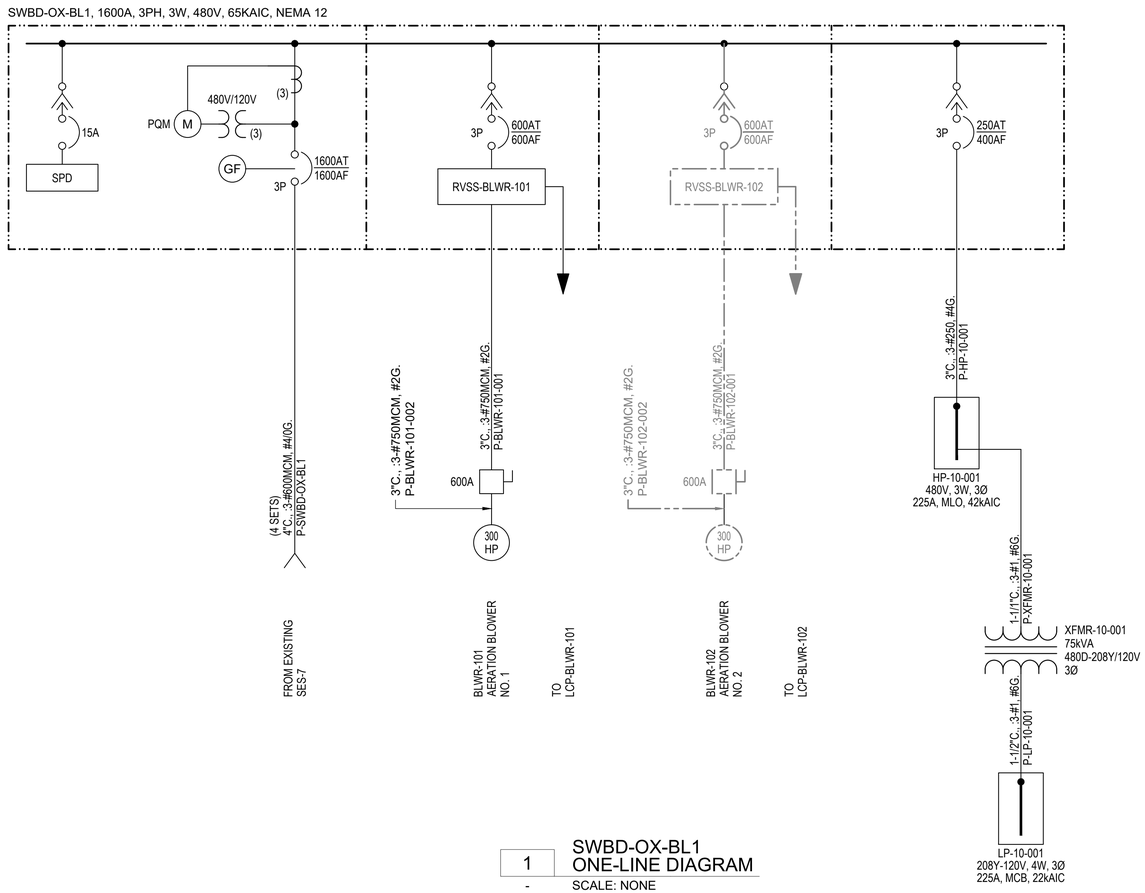

1 SWBD-OX-BL1
ONE-LINE DIAGRAM

\- SCALE: NONE

NO.	REVISION	REV BY	CKD BY	DATE
-	-	-	-	-

SURPRISE
ARIZONA

CITY OF SURPRISE
SPA 1 WRF CAPACITY EXP
FACILITY RERATING

WATERWORKS ENGINEERS

ELECTRICAL
SWBD-OX-BL1
ONE-LINE DIAGRAM

CHECKED BGY
DRAWN JJI
DESIGN ER

30% SUBMITTAL

NOT FOR CONSTRUCTION

DATE
JULY 2022
PROJECT NUMBER
20-018
DRAWING NUMBER
E-00-105
SHEET NO. ###

REUSE OF DOCUMENTS: THIS DOCUMENT, AND THE IDEAS AND DESIGN INCORPORATED HEREIN, AS AN INSTRUMENT OF PROFESSIONAL SEVICE, IS THE PROPERTY OF WATER WORKS ENGINEERS, LLC. AND IS NOT TO BE USED, IN WHOLE OR PART, FOR ANY OTHER PROJECT WITHOUT THE WRITTEN AUTHORIZATION OE WATER WORKS ENGINEERS,LLC.

FILE PATH: C:\USERS\EDGARR\ACCDOCS\WATER WORKS ENGINEERS\20-018 SPA 1 WRF CAPACITY EXP FACILITY RERATING\PROJECT FILES\DRAWINGS\2018D-E105.DWG

DATE AND TIME: 8/12/2022 3:22:10 PM

SCADA | PLC | MCC

TYP FOR 101, 111 & 121 | TYP FOR 101, 102 & 103 | TYP FOR 101, 102 & 103

PLENUM DOOR NO.1 OPEN ALARM — ZAC 40-101
BLOWER INLET DIFFERENTIAL PRESSURE HIGH — DPI 40-101
INLET TEMPERATURE — TIT 40-101

BLOWER STATUS/ CONTROL

LCP-40-100

VFD-40-101 — RST — HMS 40-101 — R RUN MR 40-101 — G ST MS 40-101 — A FL MA 40-101

480 V

E-STOP HS 40-101 — HMI — LCP-40-101

DOOR SWITCH ZSC 40-101

PLENUM

DPIT 40-101 — TI 40-101 — TIT 40-101

PSH 40-101A — ZSO 40-101A — ZT 40-101A — ZSC 40-101A

24"-WSP-PA

IGV-40-101

VT 40-101A — VT 40-101I

TE 40-101A — TE 40-101B — TE 40-101C — VT 40-101C
TE 40-101D — TE 40-101E — VT 40-101C
TE 40-101F — TE 40-101G — TE 40-101H

BLWR-40-101
PROCESS AIR BLOWER NO.1

PIT 40-101A — TIT 40-101A

RW

SIL-40-101
DISCHARGE CONE SILENCER

PSH 40-101B — PIT 40-101 — BAV-40-101

LOR — HSC 40-102A — OSC — HSC 40-102B — LCS-40-102

SIL-40-102
BLOW-OFF SILENCER — ATM

16"-WSP-PA — MOV-40-101 — BLOW-OFF CONTROL VALVE

480 V — M

LOR — HSC 40-103A — OSC — HSC 40-103B — LCS-40-103

480 V — M

CKV-40-101 — MOV-40-102

-"-PA

N-40-102 | B
N-40-102 | C

INTAKE GRILLE WITH FILTERS, TYP

TE 40-101K — WATER COOLED OIL SYSTEM

PSH 40-102A — RW

ZSO 40-102A — ZT 40-102A — ZSC 40-102A

IGV-40-102

24"-WSP-PA

480 V — E-STOP HS 40-102 — HMI — LCP-40-102

PSH 40-102B — PIT 40-102

BAV-40-111

16"-WSP-PA — MOV-40-111 — BLOW-OFF CONTROL VALVE

480 V — M

LOR — HSC 40-112A — OSC — HSC 40-112B — LCS-40-112

SIL-40-112
BLOW-OFF SILENCER — ATM

LOR — HSC 40-113A — OSC — HSC 40-113B — LCS-40-113

480 V — M

36"-WSP-PA

DPIT 40-111 — TIT 40-111 — TI 40-111

VT 40-102A — VT 40-102I

TE 40-102A — TE 40-102B — TE 40-102C — VT 40-102C
TE 40-102D — TE 40-102E — VT 40-102C
TE 40-102F — TE 40-102G — TE 40-102H

BLWR-40-102
PROCESS AIR BLOWER NO.2

PIT 40-102A — TIT 40-102A

RW

SIL-40-111
DISCHARGE CONE SILENCER

CKV-40-111 — MOV-40-113

-"-PA

LOR — HSC 40-122A — OSC — HSC 40-122B — LCS-40-122

LOR — HSC 40-123A — OSC — HSC 40-123B — LCS-40-123

BLOWER PACKAGE SYSTEM

DPIT 40-121 — TIT 40-121 — TI 40-121

PSH 40-103A — TE 40-102K — WATER COOLED OIL SYSTEM

24"-WSP-PA — RW

480 V — E-STOP HS 40-103 — HMI — LCP-40-103

ZT 40-103A — ZSO 40-103A — ZSC 40-103A

PSH 40-103B — PIT 40-103

BAV-40-121

16"-WSP-PA — MOV-40-122 — BLOW-OFF CONTROL VALVE

480 V — M

SIL-40-122
BLOW-OFF SILENCER — ATM

INLET-VANE-103

VT 40-103A — VT 40-103I

TE 40-103A — TE 40-103B — TE 40-103C — VT 40-103C
TE 40-103D — TE 40-103E — VT 40-103C
TE 40-103F — TE 40-103G — TE 40-103H

BLWR-40-103
PROCESS AIR BLOWER NO. 3

PIT 40-103A — TIT 40-103A

RW

TE 40-103K — WATER COOLED OIL SYSTEM

RW

24"-WSP-PA

480 V — M

CKV-40-121 — MOV-40-123

SIL-40-121
DISCHARGE CONE SILENCER

36"-WSP-PA | A | N-40-102

36"x24"

36"-WSP-PA

-"-PA

NO.	REVISION	REV BY	CKD BY	DATE
-	-	-	-	-

SURPRISE ARIZONA

CITY OF SURPRISE
SPA 1 WRF CAPACITY EXP
FACILITY RERATING

WATERWORKS ENGINEERS

FELIX CONSTRUCTION

INSTRUMENTATION
PLANT IV & V
PROCESS AIR BLOWER 1
OPTION 1 P&ID

CHECKED JHM
DRAWN MC
DESIGN DB

BLOWER
PROCUREMENT SPEC

DATE
SEPTEMBER 2022
PROJECT NUMBER
20-018
DRAWING NUMBER
N-40-101
SHEET NO. -

REUSE OF DOCUMENTS: THIS DOCUMENT, AND THE IDEAS AND DESIGN INCORPORATED HEREIN, AS AN INSTRUMENT OF PROFESSIONAL SEVICE, IS THE PROPERTY OF WATER WORKS ENGINEERS, LLC. AND IS NOT TO BE USED, IN WHOLE OR PART, FOR ANY OTHER PROJECT WITHOUT THE WRITTEN AUTHORIZATION OE WATER WORKS ENGINEERS,LLC.

FILE PATH:C:\USERS\MICHELC\APPDATA\LOCAL\AUTODESK\AUTOCAD PLANT 3D\COLLABORATIONCACHE\20-018 CITY OF SURPRISE SPA1 WRF\PID DWG\2018D-N-40-101.DWG

DATE AND TIME: 8/12/2022 3:22:10 PM

SCADA

PLC

MCC

TYP FOR 141

TYP FOR 104 & 105

PLENUM DOOR NO.2 OPEN ALARM — ZAC 40-102

BLOWER INLET DIFFERENTIAL PRESSURE HIGH — DPI 40-131

INLET TEMPERATURE — TIT 40-131

DISCHARGE TEMPERATURE — TIT 40-102

VFD-40-104 — HMS 40-104 — RST — MR 40-104 — R RUN — MS 40-104 — G ST — MA 40-104 — A FL

TO LCP-40-100

B N-40-101

480 V

E-STOP HS 40-104 — HMI — LCP-40-104

LOR HSC 40-131A OSC HSC 40-131B LCS-40-131

LOR HSC 40-132A OSC HSC 40-132B LCS-40-132

ATM

SIL-132

ZSO 40-104A — ZT 40-104A — ZSC 40-104A

PSH 40-104A

PSH 40-104B — PIT 40-104

BAV-40-131

16"-WSP-PA

MOV-40-131 BLOW-OFF CONTROL VALVE

CKV-40-131 — MOV-40-132

DPIT 40-131 — TI 40-131 — TIT 40-131

INTAKE GRILLE WITH FILTERS, TYP

24"-WSP-PA

IGV-40-104

VT 40-104A — VT 40-104I

TE 40-104A — TE 40-104B — TE 40-104C — VT 40-104C

TE 40-104D — TE 40-104E — VT 40-104C

TE 40-104F — TE 40-104G — TE 40-104H

BLWR-40-104 PROCESS AIR BLOWER NO.4

SIL-40-131 DISCHARGE CONE SILENCER

PIT 40-104A — TIT 40-104A

RW

TE 40-104K — WATER COOLED OIL SYSTEM

A N-40-101 — 36"-WSP-PA

42"-WSP-PA

C N-40-101

TI 40-102 — TIT 40-102

LOR HSC 40-141A OSC HSC 40-141B LCS-40-141

LOR HSC 40-142A OSC HSC 40-142B LCS-40-142

ATM

DPIT 40-141 — TIT 40-141 — TI 40-141

PSH 40-105A

ZSO 40-105A — ZT 40-105A — ZSC 40-105A

E-STOP HS 40-105 — HMI — LCP-40-105

PSH 40-105B — PIT 40-105

BAV-40-141

16"-WSP-PA

MOV-40-141 BLOW-OFF CONTROL VALVE

CKV-40-141 — BFV-40-142

24"-WSP-PA

IGV-40-105

VT 40-105A — VT 40-105I

TE 40-105A — TE 40-105B — TE 40-105C — VT 40-105C

TE 40-105D — TE 40-105E — VT 40-105C

TE 40-105F — TE 40-105G — TE 40-105H

BLWR-40-105 PROCESS AIR BLOWER NO.5

SIL-40-141 DISCHARGE CONE SILENCER

PIT 40-105A — TIT 40-105A

RW

TE 40-104K — WATER COOLED OIL SYSTEM

PLENUM

DOOR SWITCH ZSC 40-102

BF — FUTURE CONNECTION TO PLANT III

42"-WSP-PA

A N-10-101 — TO PLANT IV NORTH OXIDATION DITCH

BLOWER PACKAGE SYSTEM

NOTE: PROCESS AIR BLOWER NO 5 SHOWN FOR ALTERNATIVE B (300 HP)

NO.	REVISION	REV BY	CKD BY	DATE
-	-	-	-	-

SURPRISE ARIZONA

CITY OF SURPRISE
SPA 1 WRF CAPACITY EXP
FACILITY RERATING

WATERWORKS ENGINEERS

FELIX CONSTRUCTION

INSTRUMENTATION

PLANT IV & V
PROCESS AIR BLOWER 2
OPTION 1 P&ID

CHECKED JHM
DRAWN MC
DESIGN DB

BLOWER

PROCUREMENT SPEC

DATE
SEPTEMBER 2022

PROJECT NUMBER
20-018

DRAWING NUMBER
N-40-102

SHEET NO.

REUSE OF DOCUMENTS: THIS DOCUMENT, AND THE IDEAS AND DESIGN INCORPORATED HEREIN, AS AN INSTRUMENT OF PROFESSIONAL SEVICE, IS THE PROPERTY OF WATER WORKS ENGINEERS, LLC. AND IS NOT TO BE USED, IN WHOLE OR PART, FOR ANY OTHER PROJECT WITHOUT THE WRITTEN AUTHORIZATION OE WATER WORKS ENGINEERS,LLC.

FILE PATH:C:\USERS\MICHELC\APPDATA\LOCAL\AUTODESK\AUTOCAD PLANT 3D\COLLABORATIONCACHE\20-018 CITY OF SURPRISE SPA1 WRF\PID DWG\2018D-N-40-102.DWG

DATE AND TIME: 8/12/2022 3:22:10 PM

SCADA

PLC

MCC

TYP FOR 101, 111 & 121

TYP FOR 101, 102 & 103

TYP FOR 101, 102 & 103

PLENUM DOOR NO.1 OPEN ALARM

BLOWER INLET DIFFERENTIAL PRESSURE HIGH

INLET TEMPERATURE

ZAC 41-101

DPI 41-101

TIT 41-101

BLOWER STATUS/ CONTROL

HMI

LCP-41-100

RVSS-41-101

HMI

HMS 41-101

RST

R MR 41-101

RUN G MS 41-101

ST A MA 41-101

FL

480 V

E-STOP HS 41-101

HMI

LCP-41-101

DOOR SWITCH

ZSC 41-101

PLENUM

DPIT 41-101

TI 41-101

TIT 41-101

PSH 41-101A

ZSO 41-101A

ZT 41-101A

ZSC 41-101A

24"-WSP-PA

IGV-41-101

VT 41-101A

VT 41-101I

TE 41-101A

TE 41-101B

TE 41-101C

VT 41-101C

TE 41-101D

TE 41-101E

VT 41-101C

TE 41-101F

TE 41-101G

TE 41-101H

BLWR-41-101

PROCESS AIR BLOWER NO.1

DGV-41-101

PIT 41-101A

TIT 41-101A

RW

TE 41-101K

WATER COOLED OIL SYSTEM

INTAKE GRILLE WITH FILTERS, TYP

DPIT 41-111

TIT 41-111

TI 41-111

PSH 41-102A

ZSO 41-102A

ZT 41-102A

ZSC 41-102A

24"-WSP-PA

IGV-41-102

VT 41-102A

VT 41-102I

TE 41-102A

TE 41-102B

TE 41-102C

VT 41-102C

TE 41-102D

TE 41-102E

VT 41-102C

TE 41-102F

TE 41-102G

TE 41-102H

BLWR-41-102

PROCESS AIR BLOWER NO.2

DGV-41-102

PIT 41-102A

TIT 41-102A

RW

TE 41-102K

WATER COOLED OIL SYSTEM

BLOWER PACKAGE SYSTEM

DPIT 41-121

TIT 41-121

TI 41-121

PSH 41-103A

24"-WSP-PA

IGV-41-103

VT 41-103A

VT 41-103I

TE 41-103A

TE 41-103B

TE 41-103C

VT 41-103C

TE 41-103D

TE 41-103E

VT 41-103C

TE 41-103F

TE 41-103G

TE 41-103H

BLWR-41-103

PROCESS AIR BLOWER NO. 3

DGV-41-103

PIT 41-103A

TIT 41-103A

RW

TE 41-103K

WATER COOLED OIL SYSTEM

RW

LOR HSC 41-102A OSC HSC 41-102B LCS-41-102

SIL-41-102 BLOW-OFF SILENCER

ATM

16"-WSP-PA

MOV-41-101 BLOW-OFF CONTROL VALVE

480 V

M

PSH 41-101B

PIT 41-101

ZT 41-101B

ZSO 41-101B

ZSC 41-101B

BAV-41-101

SIL-41-101 DISCHARGE CONE SILENCER

CKV-41-101

MOV-41-102

-"-PA

LOR HSC 41-103A OSC HSC 41-103B LCS-41-103

N-40-102A B

N-40-102A C

LOR HSC 41-112A OSC HSC 41-112B LCS-41-112

E-STOP HS 41-102 HMI LCP-41-102

PSH 41-102B

PIT 41-102

SIL-41-112 BLOW-OFF SILENCER

ATM

16"-WSP-PA

MOV-41-111 BLOW-OFF CONTROL VALVE

BAV-41-111

LOR HSC 41-113A OSC HSC 41-113B LCS-41-113

SIL-41-111 DISCHARGE CONE SILENCER

CKV-41-111

MOV-41-113

-"-PA

36"x24"

36"-WSP-PA

E-STOP HS 41-103 HMI LCP-40-103

ZT 41-103A

ZSO 41-103A

ZSC 41-103A

PSH 41-103B

PIT 41-103

ZT 41-103B

ZSO 41-103B

ZSC 41-103B

BAV-41-121

LOR HSC 41-122A OSC HSC 41-122B LCS-41-122

SIL-41-122 BLOW-OFF SILENCER

ATM

16"-WSP-PA

MOV-41-122 BLOW-OFF CONTROL VALVE

LOR HSC 41-123A OSC HSC 41-123B LCS-41-123

SIL-41-121 DISCHARGE CONE SILENCER

CKV-41-121 MOV-41-123

24"-WSP-PA

36"-WSP-PA

A N-40-102A

NO.	REVISION	REV BY	CKD BY	DATE
-	-	-	-	-

CITY OF SURPRISE
SPA 1 WRF CAPACITY EXP
FACILITY RERATING

SURPRISE ARIZONA

WATERWORKS ENGINEERS

FELIX CONSTRUCTION

INSTRUMENTATION

PLANT IV & V
PROCESS AIR BLOWER 1
OPTION 2 P&ID

CHECKED JHM

DRAWN MC

DESIGN DB

BLOWER

PROCUREMENT SPEC

DATE
SEPTEMBER 2022

PROJECT NUMBER
20-018

DRAWING NUMBER
N-40-101A

SHEET NO. -

REUSE OF DOCUMENTS: THIS DOCUMENT, AND THE IDEAS AND DESIGN INCORPORATED HEREIN, AS AN INSTRUMENT OF PROFESSIONAL SEVICE, IS THE PROPERTY OF WATER WORKS ENGINEERS, LLC. AND IS NOT TO BE USED, IN WHOLE OR PART, FOR ANY OTHER PROJECT WITHOUT THE WRITTEN AUTHORIZATION OE WATER WORKS ENGINEERS,LLC.

FILE PATH:C:\USERS\MICHELC\APPDATA\LOCAL\AUTODESK\AUTOCAD PLANT 3D\COLLABORATIONCACHE\20-018 CITY OF SURPRISE SPA1 WRF\PID DWG\2018D-N-40-101A.DWG

DATE AND TIME: 8/12/2022 3:22:10 PM

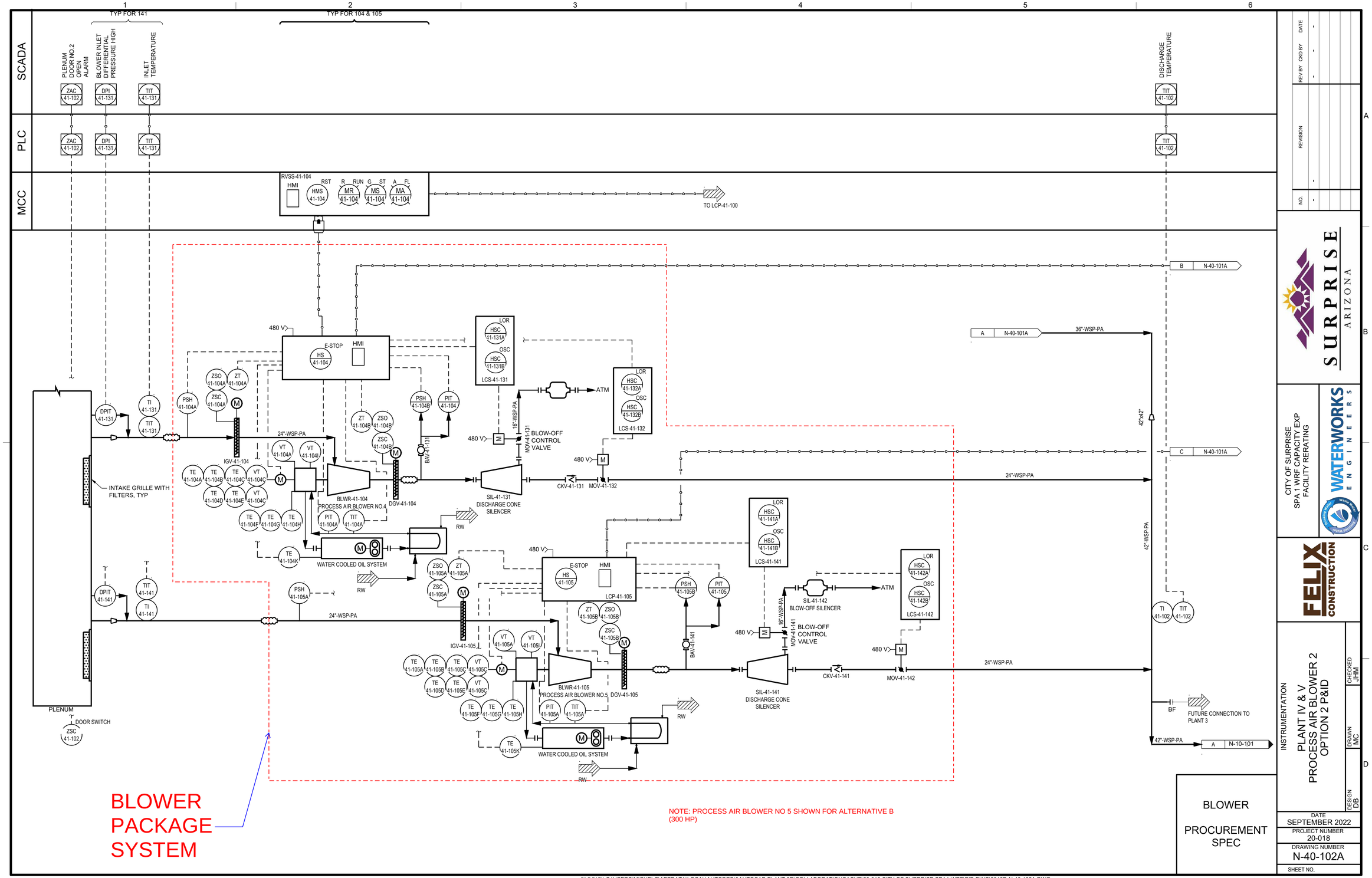

NO.	REVISION	REV BY	CKD BY	DATE
-	-	-	-	-

SURPRISE ARIZONA

CITY OF SURPRISE
SPA 1 WRF CAPACITY EXP
FACILITY RERATING

WATERWORKS ENGINEERS

FELIX CONSTRUCTION

INSTRUMENTATION
PLANT IV & V
PROCESS AIR BLOWER 2
OPTION 2 P&ID

CHECKED JHM
DRAWN MC
DESIGN DB

BLOWER
PROCUREMENT SPEC

DATE SEPTEMBER 2022
PROJECT NUMBER 20-018
DRAWING NUMBER N-40-102A
SHEET NO.

REUSE OF DOCUMENTS: THIS DOCUMENT, AND THE IDEAS AND DESIGN INCORPORATED HEREIN, AS AN INSTRUMENT OF PROFESSIONAL SEVICE, IS THE PROPERTY OF WATER WORKS ENGINEERS, LLC. AND IS NOT TO BE USED, IN WHOLE OR PART, FOR ANY OTHER PROJECT WITHOUT THE WRITTEN AUTHORIZATION OE WATER WORKS ENGINEERS,LLC.

FILE PATH:C:\USERS\MICHELC\APPDATA\LOCAL\AUTODESK\AUTOCAD PLANT 3D\COLLABORATIONCACHE\20-018 CITY OF SURPRISE SPA1 WRF\PID DWG\2018D-N-40-102A.DWG

DATE AND TIME: 8/12/2022 3:22:10 PM

DOCUMENTS FOR THE BLOWER PROCUREMENT

CITY OF SURPRISE

PUBLIC WORKS DEPARTMENT
SPA1 WRF CAPACITY EXPANSION FACILITY RERATING

WWE PROJECT 20-018

TECHNICAL SPECIFICATIONS

SEPTEMBER 2022

BLOWER PROCUREMENT SET

SURPRISE
ARIZONA

ENGINEER:

WATERWORKS
ENGINEERS

WATER WORKS ENGINEERS, LLC.
SCOTTSDALE, AZ

This page intentionally left blank

TABLE OF CONTENTS

SECTION	TITLE
DIVISION 11	
11300	SUBMERSIBLE SEWAGE PUMPS
11629	SINGLE STAGE CENTRIFUGAL BLOWERS
DIVISION 13	
13311	PLC HARDWARE AND SOFTWARE
16269	VARIABLE FREQUENCY DRIVES-600V
16423	LOW VOLTAGE MOTOR CONTROL CENTER

This page intentionally left blank

SECTION 11300

SUBMERSIBLE SEWAGE PUMPS

PART 1 - GENERAL

1.1 EQUIPMENT TAG NUMBERS

A. This specification section refers to the Jet Aeration Pumps

- JAP-ODN4-411
- JAP-ODN4-412
- JAP-ODN4-413
- JAP-ODN4-414
- JAP-ODN4-415
- JAP-ODS4-421
- JAP-ODS4-422
- JAP-ODS4-423
- JAP-ODS4-424
- JAP-ODS4-425
- JAP-ODN5-511
- JAP-ODN5-512
- JAP-ODN5-513
- JAP-ODN5-514
- JAP-ODN5-515
- JAP-ODN5-521
- JAP-ODN5-522
- JAP-ODN5-523
- JAP-ODN5-524
- JAP-ODN5-525

1.2 SUBMITTALS

A. Product Data:
   1. Make, model, weight, and horsepower of each equipment assembly.
   2. Complete catalog information, descriptive literature, specifications, and identification of materials of construction.
   3. Dimensional outline and installation drawing. Full installation instructions.
   4. Performance data curves showing head, capacity, horsepower demand, pump efficiency, and net positive suction head required over the entire operating range of the pump, from shutoff to maximum capacity. Indicate separately the head, capacity, horsepower demand, overall efficiency, and minimum submergence required at the guarantee point.
   5. Power and control wiring diagrams, including terminals and numbers.
   6. Data on the moisture/temperature protective relay
   7. Complete motor nameplate data, as defined by NEMA, motor manufacturer, and including any motor modifications.
   8. Factory finish system.
   9. Complete catalog information for the davit crane, including make, model, lifting capacity, materials of construction, and installation drawing with dimensions.

B. Motor Tests and Data:
   1. For each motor furnish an inspection report for the motor or for a previously manufactured electrically duplicate motor that has been tested. Provide the following minimum data:
      a. Running current.
      b. Locked rotor current.
      c. Winding resistance measurement.
      d. High potential test.
      e. Bearing inspection.

C. Operation and Maintenance Manuals: Submit complete manuals including: copies of all approved Shop Drawings, test reports, maintenance data and schedules, description of operation, and spare parts information.

D. Guarantee: Submit Guarantee.

E. Test Data: Pumps shall not be shipped until the ENGINEER has approved the test reports. Submit:
   1. Four copies of certified pump tests.

PART 2 - PRODUCTS

2.1 PRODUCTS

A. Pump equipment shall consist of pump(s) complete with motor(s), guide rails and supports, base elbow(s), anchoring brackets, power cable(s), pump lifting cable(s), and protective control system. Pump metal parts that come into contact with guide rail or cable system shall be made of non-sparking materials.

B. Pumps and Motors:
   1. Jet Aeration Pumps:
      a. Flow/Head: 7,400 gpm at 19 feet of Total Dynamic Head
      b. Horsepower: 75 HP (max)
      c. Voltage: 480V, 3 Phase, 60 Hertz
      d. 8-pole, 900 RPM

C. Pump Features:
   1. Service: Raw Sewage
   2. Type: Non-clog centrifugal submersible sewage pump
   3. Capacity: Passing 2” ball, minimum
   4. Volute: ASTM A48 CL35B Cast Iron
   5. Impeller: ASTM A48 CL35B Cast Iron

D. Accessories:
   1. Base Elbow: ASTM A48, CL35B Cast Iron, one per pump
   2. Guide Rails: Type 316 Stainless Steel, coordinate length with drawings, 2-inch diameter, two per pump
   3. Upper Guide Rail Brackets (one per pump):
      a. Type 316 Stainless Steel
      b. Mount to concrete structure or fabricated steel support.
   4. Intermediate Guide Rail Brackets (one per pump):
      a. Type 316 Stainless Steel
      b. Provide if guide rails are longer than 20-feet
      c. Brackets shall mount to discharge piping
   5. Pump Lift System:
      a. Furnish accessories necessary for lifting the pump and motor from the wetwell. The working load of the lifting system shall be a minimum of 50% greater than the pump unit’s weight.
      b. Lifting Chain: approximately 18” long 316 Stainless Steel, provide one chain per pump
      c. 30 feet of nylon line connected to the lifting chain
      d. Forged steel grip eye for connecting/disconnecting davit crane hook and cable to pump chain.
   6. Safety Hooks and Cable Holders: 316 Stainless Steel, provide one of each per pump

E. Motors:
   1. Connected load shall not exceed 90 percent of motor nameplate horsepower

2. Motor shall be non-overloading for the entire pump operating curve.
3. Furnish motors suited for operation in a Class 1, Division 1, Group D explosion-proof atmosphere and certified as such by Factory Mutual.
4. Vertical mounting
5. Solid shaft
    a. Shaft seal: Tandem mechanical seals
6. Service factor: 1.15
7. Thermal Protection: Normally closed thermal switch in stator housing
8. Moisture Protection: Leakage Sensor in stator housing
9. Motor capable of 15 starts per hour
10. Motor capable of continuous full-load operation while unsubmerged without overheating or voiding Class 1, Division 1, Group D compliance
11. Class F insulation
12. Provide motor lifting lug
13. Provide motor power and control cables with connections made at the motor inside a junction chamber. Cable entry shall be sealed and provided with means of strain relief. Cables shall comply with applicable code requirements. Coordinate pump cable length with distance between pump and control panel, per drawings and field installation.

F. Controls:
    1. Provide moisture protection/thermal protection relay for connection to leakage sensor and thermal switch on each motor for installation in an external control panel by others.
    2. Provide pump control panel with the following features:
        a. NEMA 3R enclosure with locking handle
        b. Label with black phenolic label with white engraved lettering, 1-inch high "JET AERATION PUMP CONTROL PANEL"
        c. Interior light with switch
        d. False front panel inside
            1) Power disconnect inside enclosure, mounted to false front
            2) Pump run indicator lights (RED) mounted to false front, push to test
            3) Panel power indicator light (WHITE) mounted to false front, push to test
            4) Pump fail indicator lights (AMBER) mounted to false front, push to test
            5) Pump seal indicator lights (AMBER) mounted to false front, push to test
            6) Pump motor over temperature indicator lights (AMBER) mounted to false front, push to test
            7) Pump LOCAL/OFF/REMOTE switch for each pump, mounted to false front
            8) Pump START pushbutton
            9) Pump STOP pushbutton
            10) Alarm RESET pushbutton
            11) Pump run time
        e. Single power feed at pump motor voltage indicated above
        f. Motor combination starters, sized for motor horsepower indicated above
        g. Local beacon and siren
        h. Control transformer to provide control voltage (24 or 120 volt)
    3. Control Description:
        a. When pumps are in "REMOTE" position:
            1) Pump 'START' on command from SCADA
            2) Pump 'STOP' on command from SCADA
            3) Pump 'RESET' on command from SCADA
        b. When Pumps are in "LOCAL" position:

1) Pump 'START' on pushbutton
2) Pump 'STOP' on pushbutton
3) Pump 'RESET' on pushbutton

c. Pump interlock and alarm on motor overheat (thermal switch) or moisture leakage (leakage sensor)
d. Local beacon and siren
   1) Activate beacon and siren on alarm
e. Remote alarms
   1) Make the following alarms available for pick-up at a terminal strip in the control panel:
      a) Pump trouble for each pump (indicating motor overheat or moisture leakage)
      b) Pump run status for each pump
      c) Panel power status
f. Remote indicators
   1) REMOTE status
   2) RUN status
   3) ALARM status

G. Manufacturers/Models:
   1. Flygt Model NP3301 with 816 impeller
   2. No equal allowed

H. Spare Parts:
   1. Provide the following spare parts for each pump:
      a. One complete set of upper and lower bearings
      b. One complete set of seals, gaskets and O-rings
   2. Special tools required for normal operation and maintenance of the equipment shall be furnished with the equipment by the manufacturer.

PART 3 - EXECUTION

3.1 INSTALLATION

A. Installation shall be in complete accordance with manufacturer's instructions.

B. Installation shall include furnishing and applying an initial supply of grease and oil, recommended by manufacturer.

C. Check and align all pumps, motors, etc. after pump assemblies have been installed to ensure alignment and assembly has been unchanged from factory assembly conditions. Make adjustments required to place system in proper operating condition. Pump installation shall place no strain on adjacent piping systems.

3.2 FIELD QUALITY CONTROL

A. Functional Test: Conduct on each pump.
   1. Alignment: Test complete assemblies for correct rotation, proper alignment and connection, and quiet operation.

3.3 MANUFACTURER'S FIELD SERVICES

A. A factory trained representative shall be provided for start-up and test services and operation and maintenance personnel training services. The representative shall make two one-day visits to the site for performing these services.

+ + END OF SECTION + +

This page intentionally left blank

SECTION 11371

SINGLE STAGE CENTRIFUGAL AIR BLOWERS

PART 1 - GENERAL

1.1 DESCRIPTION

A. Scope:
1. Provide all labor, materials, equipment and incidentals as shown on the Drawings, specified and required to furnish and install single stage centrifugal air blowers complete and operational with motors and all appurtenances as shown on the Drawings and as specified. Anchor bolts are included in this Section.
2. The Equipment Supplier or designated representative shall furnish, certify installation, certify testing, and certify the placement in satisfactory operation of the electric motor driven single stage centrifugal blower units for the process air system. The Equipment Supplier shall provide each unit with the following:
   - Main motor drive starters
   - Air flow control valves(s)
   - Lubrication system
   - Cooling system
   - Isolation valve(s)
   - Local control panel
   - Software
   - Discharge check valve
   - Blow off valve and silencer
   - Wafer check valves
   - Temperature gauges, pressure gauges and sensors
   - Vibration isolators
   - Flexible connections
3. All blowers, instrumentation, controls, and appurtenances shall be provided as shown on the drawings and as specified herein for a complete and automated process air system. A common Plant Master Control Panel (MCP) will be provided to control the process air and blower operation. The Equipment Supplier shall ensure that the blower panels will communicate with the Plant MCP.
4. All equipment specified in this section shall be designed by the Manufacturer and furnished by the Equipment Supplier, who shall be responsible for the suitability and compatibility of all included equipment.
5. Provide the following motor sizes with performance data: See performance requirements below in this section.
   a. Alternative A – Four (4) 350 HP motor blower systems.
   b. Alternative B – Five (5) 300 HP motor blower systems.
6. Provide each blower with the following control options. Provide performance data for ENGINEER's approval.

a. Option 1 – Blower equipped with an inlet air guide vane (IGV) assembly only with a Variable Frequency Drive (VFD).
b. Option 2 – Blower equipped with both the IGV and discharge vane (DV) assemblies.

B. Coordination:
1. Review installation procedures under this and other Sections and coordinate the installation of items that must be installed with, or before the direct drive single stage centrifugal blowers Work

1.2 QUALITY ASSURANCE

A. Manufacturer's Qualifications:
1. Manufacturer shall have a minimum of five years' experience of producing substantially similar equipment and shall be able to show evidence of at least five installations in satisfactory operation for at least five years.

B. Component Supply and Compatibility:
1. Obtain all equipment included in this Section regardless of the component manufacturer from a single Equipment Supplier unless otherwise noted.
2. The blower equipment manufacturer shall review and approve or shall prepare all Shop Drawings and other submittals for all components furnished under this Section.
3. All components shall be specifically designed for the specified service and shall be integrated into the overall equipment design by the Equipment Supplier.

C. Coordination Meeting:
1. A coordination meeting shall be scheduled 20 days from the Notice to Proceed and held in the OWNER's offices. The purpose of this meeting is to discuss all aspects of blower instrumentation and control. Manufacturer's representatives shall be in attendance.

1.3 SUBMITTALS

A. Shop Drawings: Submit for approval the following:
a. Comments and exceptions paragraph by specification paragraph. Provide detailed information on structural, mechanical, electrical, or other changes or modifications necessary to adapt non-specified materials to the arrangement or details shown.
b. General description of blower with all performance data, blower curves, and model.
c. Mechanical drawings with general arrangement showing blower base dimensions, floor mounting, skid piping, overall weights, and weights of largest components requiring removal for maintenance.
d. Process and instrumentation diagrams.
e. Drawings of all control panels to include:
1) Electrical ladder diagram

2) Interconnects to all components outside the panel
3) Door layout
4) Interior layout
5) Sample Operator Interface screens for the local and master control panel

f. Drawings of the main drive motor starter shall include:
1) All installation dimensions
2) Access locations
3) Maintenance clearance requirements
4) Weights of assembly and any "rack out components"
5) Mounting requirements

g. Furnish a main drive motor starter schematic showing one line power diagrams and all control wiring with wires numbered.

h. Provide a main drive motor start analysis showing compliance with motor acceleration requirements, line current limits, and generally that the starter/motor combination will accelerate the load to full speed within the specified parameters.

i. Starter installation, line and load wire sizing, installation, and connection hardware (lugs) is the responsibility of others.

j. Operating description for the local (and master) control panels. As a minimum, provide a more detailed description than given in this specification, covering all logic and sequences of operation.

k. Provide a detailed description of the data acquisition, remote monitoring, and predicted preventative maintenance software. Typical Operator Interface screens shall be provided with detailed descriptions, the various tattletale monitors, preventative maintenance items, and data logging features.

l. Provide a detailed description that demonstrates the simultaneous and continuous efficiency optimization of the inlet guide vanes and variable diffuser vanes to obtain the lowest power consumption based on the three (3) variables of inlet temperature, differential pressure, and machine capacity.

B. Delegated Design Submittals: The following shall be signed and sealed by a Certified Professional Engineer registered in the State of Arizona:
a. Anchor bolt analysis and associated calculations signed by a qualified Structural Engineer.

C. Informational Submittals during construction shall be made in accordance with Section 01610 General Product Requirements. In addition, submit the following:
1. Shop Test Results:
a. Submit results of all blower shop tests required.
b. Submit results of all electric motor shop tests required.

2. Field Test Results:
a. Submit a written test procedure and report giving the results of the field tests required.

D. Closeout Submittals:

1. Operations and Maintenance Manuals:
   a. Submit complete Installation, Operation and Maintenance Manuals, including, test reports, maintenance data and schedules, description of operation, and spare parts information. Operations and Maintenance Manuals shall also include the following:
      1) Unloading, handling, storage, and maintenance requirements.
      2) Spare parts recommended list and those supplied per specifications.
      3) Recommended lubricants
      4) Surface preparation and shop paint specifications
      5) Instrument settings
      6) Troubleshooting guide
      7) List of components and catalog cuts fully describing all items
      8) Maintenance summary forms
   b. Furnish Operation and Maintenance Manuals in conformance with the requirements of Section 01330, Submittal Procedures.

1.4 PRODUCT, DELIVERY, STORAGE AND HANDLING

A. All equipment shall be skid mounted or crated to protect against damage during shipment. All parts shall be properly protected so that no damage or deterioration will occur during a prolonged delay from the time of shipment until installation is completed, and the units and equipment are ready for operation.

B. Finished surfaces of all exposed flanges shall be protected by fiberboard blank flanges strongly built and securely bolted thereto.

C. Shipment is not to be made until the Equipment Supplier coordinates shipment to the jobsite with CONTRACTOR, assuring that the equipment will be properly received and stored.

D. Upon receipt, store equipment in strict accordance with the Manufacturer's instructions, and connect and energize motor space heaters (and any other protective devices), as required.

E. Store materials to permit easy access for inspection and identification. Keep all material off the ground using pallets, platforms, or other supports. Protect equipment including packaged materials from corrosion and deterioration.

PART 2 - PRODUCTS

2.1 SERVICE CONDITIONS

A. General: Design equipment to be suitable for the process and service conditions described below and in Schedule of Service Conditions:
   1. Blowers shall be designed for continuous 24 hour per day, seven day per week operation, shall be suitable for the process and service conditions described below and in the Schedule of Service Conditions.

B. Design Requirements:
   1. Alternative A, Option 1:
      a. Three (3) Operational and One (1) Stand-By, 350 HP motor each
      b. IGV and VFD configuration
   2. Alternative A, Option 2:
      a. Three (3) Operational and One (1) Stand-By, 350 HP motor each
      b. IGV and DV configuration
   3. Alternative B, Option 1:
      a. Four (4) Operational and One (1) Stand-By, 300 HP motor each
      b. IGV and VFD configuration
   4. Alternative B, Option 2:
      a. Four (4) Operational and One (1) Stand-By, 300 HP motor each
      b. IGV and DV configuration
   5. The design operating conditions and guarantee points for all alternatives and options are as follows:

Design Point	Capacity %	Total Discharge Air Flow cfm	Discharge Pressure psig	Inlet Temp °F	RH %	Estimated Power Alternative A HP	Estimated Power Alternative B HP
1	100	31,600	5.5	100	15	340	260
2	80	25,280	5.3	75	40	200	200
3	60	18,960	5.2	45	60	160	150
4	45	14,220	5.1	40	60	120	110
5	100	31,600	5.5	40	40	300	240
6	45	14,220	5.1	100	40	120	120

   6. Ambient Pressure: 14.07 psia
   7. Inlet Pressure at Blower Inlet Flange: 13.87 psia
   8. Blower Turndown: Minimum 45% of Capacity for Options 1 or 2.

C. Operating Ranges:
   1. Relative Humidity: 5 to 100 percent.
   2. Inlet Temperature: 40 to 100 °F.

D. Blower power consumptions shall be guaranteed.
   1. In the event the Tested Power Draw is in excess of the specified Power Draw, the units shall be re-worked and re-tested at no additional cost to OWNER, until they comply with the specifications.

E. Blowers shall not surge or exceed the nameplate motor rating over the entire range of operation. Blowers shall maintain a minimum of 0.5 psig rise-to-surge over the range of operation.

F. Blowers of a design requiring synchronization of air flow in order that two or more may operate in parallel shall not be acceptable; that is, the blowers shall operate in a cascade, not parallel, mode.

2.2 DETAILS OF CONSTRUCTION - BLOWER

A. Base:
   1. Mount each blower and its electric drive motor on a common, welded structural ASTM A 36 steel base. Fabricate the base of structural members or heavy steel plate and strongly reinforce to make it rigid.
   2. Welding shall conform to the AWS or equal National Code. Provide a sufficient number of leveling screws and subsole plates located around each anchor bolt for ease of alignment of the blower/motor assembly.

B. Casing:
   1. Casing shall be of close grained gray cast iron, conforming to ASTM A 48, Class 30, or modular iron conforming to ASTM A 536, Grade 60-40-18. Both inlet and discharge connections shall be cast integrally with the casing, and shall be machined and drilled accurately to ANSI Standards. Provide the casings with starting screws and eye-bolts or lugs for lifting.

C. Shaft:
   1. Shaft shall be of high-grade steel single forgings, conforming to ASTM A 471 or A 237, annealed, or equal, finished all over and accurately ground to gauge where necessary.
   2. Shaft shall be of the stiff or flexible shaft design with the first critical speed at least 20 percent removed from the operating speed. Renewable shaft sleeves shall be provided at close clearance points, and at all points subject to abrasion, erosion and corrosion. Shaft seals shall be accessible for inspection and ready replacement.

D. Impeller:
   1. Impeller shall be radial or backward leaning type of aluminum alloy or machined from alloy steel, conforming to ASTM A 471, or equal, heat treated, or of 17-4 PH stainless steel, secured to the shaft in an approved manner to withstand all working stresses, and in particular, stresses incident to the starting of the blower.
   2. Impeller shall be statically and dynamically balanced and tested for operation at operating speeds.
   3. The impeller must withstand corrosion up to 10 ppm of H2S.
   4. Perform a lateral critical speed and composite torsion analysis of blower and driver. There shall be no torsional critical speeds within the operating range of the unit.

E. Bearings:
   1. Provide each blower with pressure oil lubricated bearings designed for a minimum service life of ten years. High and low speed pinion bearings shall be precision sleeve type. High speed thrust bearings shall be double acting. Anti-friction bearings are not acceptable.
   2. Provide dual type 100 ohm platinum resistance temperature detectors (RTD's) and vibration transducers as specified in Section 17052, Process Control System Primary Sensors and Field Instruments, in each bearing and wired to the termination terminal box.

F. Lubrication:
   1. Provide a factory assembled pressure lube oil system with each blower unit. Each system shall consist of two pumps, oil reservoir, two filters, strainers, appurtenances and an oil cooler. The oil cooler shall supply clean oil at suitable pressure to lubricate the blower bearings and speed increasing gears and bearings. All components, except the oil cooler, shall be installed on or integral with, the blower baseplate and be arranged to permit ease of accessibility for operation, maintenance, inspection and cleaning.
   2. Valved vent connections and any necessary piping shall be designed to facilitate cleaning, filling and draining of idle equipment during blower operation. Adequate unions shall be provided to allow easy disassembly of all piping. Piping shall be hydraulic tubing.
   3. Pumps: The main lubrication oil pumps shall be of the positive displacement type, positively driven from the drive train and of adequate capacity to supply the lubricating requirements of the blower and speed increasing gears. An electric motor driven auxiliary oil pump shall be provided to obtain an adequate oil pressure at the bearings immediately prior to blower startup, until the main oil pump has built up sufficient pressure, and during shutdown. The auxiliary oil pump shall have the same capacity as the blower driven oil pump. Motor shall be suitable for operation on 480 volt, 3 phase, 60 Hz power.
   4. Oil Reservoir: Size oil reservoir to hold a minimum of five times the gallon per minute requirements of the blower and motor; with necessary devices for checking oil level, and with drain and cleaning openings. Furnish lube oil electric immersion heater for 480 volt, 3 phase, 60 Hz operation, complete with control thermostat, and magnetic contactor. Interior of oil reservoir shall be descaled and rust proofed by the manufacturer's standard permanent coating. Reservoirs with top mounted equipment shall have sufficient rigidity to prevent sagging and vibration. Any equipment attached to the top of the reservoir shall be mounted by means of pads to ensure that no tapped holes will extend into the reservoir. Seal each reservoir against the entrance of dirt, water or other contaminants. All cover openings shall be gasketed. Both intake and return shall be brought below minimum working fluid level. Reservoir shall be baffled to minimize air entrainment and isolate foam. Provide the fill opening with a strainer. Supply a sight gauge oil level indicator and low level switch for each reservoir and equip each reservoir with a suitably sized vent and breather filter.
   5. Oil Filters: Provide two parallel full flow oil filters of the replaceable cartridge type, each capable of removing particles over ten microns with a clean oil filter pressure drop not to exceed five psi at design temperature and flow. Filter cases and heads shall be of steel and shall be suitable for operation at a pressure not less than the relief valve setting of the positive displacement oil pumps. Filter cartridge materials shall be corrosion resistant to water in the oil. Oil filters shall be replaceable (one at a time) while operating.
   6. Strainers: Strainers shall be manually cleaned type and equipped with magnetic trap. Design and installation shall permit ready access for cleaning.
   7. Oil Cooler:
      a. Air Cooled Oil Cooler:

1) General: Provide a remote located air cooled oil cooler suitable for outdoor service with electric motor driven electric fan. Cooler shall be capable of maintaining the required cooling rate at all ambient temperatures up to 120°F. Provide a self-contained temperature regulator to by-pass the cooler until the lube oil reaches normal operating temperature.
2) Cooler shall have a welded and bolted steel frame, plenum chamber, fan ring, lifting lugs, core guard, fan guard, and fan drive suitably supported. Core shall be horizontal for vertical air discharge with continuous copper plate fins, solder bonded to flat brass tubes. Manifold tanks shall be removable to allow access to tube ends for inspection and clean-up. The core shall be pitched and shall have suitable drainage connections.
3) Fan: The fan shall be forced draft, air foil section type, with aluminum blades. Provide low tip speed for quiet operation.
4) Motors:
    a) Motors shall conform to the requirements of Section 11000, Electric Motors.
    b) For integral-horsepower ratings, motors shall be high efficiency, TEFC, Class H insulation with 1.15 service factor, solid shaft, ball bearing type. Motor thrust bearings shall be adequate to carry continuous thrust loads under all conditions of service, minimum B-10 life of 100,000 hours.
    c) For fractional-horsepower ratings, motors shall be high efficiency, totally enclosed, Class B insulation with minimum 1.15 service factor, solid shaft, ball bearing type.
5) Product and Manufacturer: Provide one of the following:
    a) Young Radiator Company.
    b) Or equal.

b. Water Cooled Oil Cooler:
1) Water Cooled Oil Cooler:
    a) General: Provide a water cooled oil cooler mounted on the blower skid. Cooler shall be capable of maintaining the required cooling rate at all ambient temperatures up to 120°F. Provide a self-contained temperature regulator and on-off solenoid valve (energize to close) to by-pass the cooler until the lube oil reaches normal operating temperature, and to maintain oil temperature.
    b) Controls for Oil Cooling System:
        1. The oil cooler solenoid valve shall be deenergized when the blower is called upon to operate. The oil cooler shall operate continuously to maintain a maximum oil temperature of 135°F. Shutdown of the blower shall energize the solenoid valve and the oil cooler.
    c) The water cooled oil cooler will utilize treatment plant effluent with a chlorine residual of 2 mg/l maximum and a delivery pressure of 80 psig maximum. The blower supplier shall provide any pressure regulators required.
    d) The oil cooler shall not require more than 30 gpm continuous flow.

G. Seals:
   1. Provide a labyrinth seal where the rotor shaft passes through the casing to limit air leakage along the shaft. Provide a combination of oil slingers and labyrinth seals to prevent oil leakage from the gearbox. All seals shall be readily replaceable.

H. Speed Increasing Gears:
   1. Speed increasing gears, shall be of the single or double helical, parallel shaft type. All gears shall be manufactured in accordance with the American Gear Manufacturers Association requirements including "Standard Specification for Measurement of Sound on High Speed Helical and Herringbone Gear Units, (AGMA 6025-C90).
   2. Gears shall be of ample size and rating to transmit the maximum torque and horsepower input requirements to the blower under all operating conditions with a minimum efficiency of 96.0 percent. The service factor for rating the gears shall be a minimum of 1.5 applied to the full load horsepower of the blower motor manufacturer's nameplate rating. Gears shall be rated for continuous duty with ambient temperatures ranging from 40°F to 120°F. Coat all exposed machined surfaces with a corrosion resisting compound for shipment.
   3. Housing: The gear drive housing shall be integral with the blower, of high grade cast iron, and sufficiently rigid to maintain the shaft positions under maximum loads. Gear housing assemblies shall be accurately machined to close tolerances for bearing fits, gear alignment and oil tightness. The housing shall be split to facilitate inspection of the internals.
   4. Bearings: Bearings shall be of bronze or the split sleeve steel backed, babbitted type with adequate provision for lubrication and shall be replaceable without removing the rotors.
   5. Gearing: Gears shall be made of alloy steel forgings with the gear teeth precision hobbed and shaved. Gears shall be manufactured to a minimum AGMA quality number of not less than 12 as specified in AGMA 390.03.
   6. Shafts: Shafts shall be high quality heat-treated alloy steel of sufficient diameter and strength for the service intended. Rotating elements shall be dynamically balanced.

I. Blower Air Vanes:
   1. Provide each blower with either both the inlet and diffuser vane assemblies or an inlet air guide vane assembly only, as described in Options 1 and 2
   2. Adjustable Air Diffuser Vane (DV) Assembly:
      a. Mount adjustable air diffuser vane assembly integral with process air blower. Vanes shall be multileaf and pivoted. Variable discharge diffuser blades shall be mounted in a cast iron housing. Sleeve bearings shall be of the permanently lubricated type and the linkage shall be readily accessible for lubrication. Vanes shall be mechanically stopped for a maximum closed setting of 75 degrees (15 degree open). Adjustable diffuser assembly shall be installed complete with a motorized actuator to operate from a 4 to 20 mADC modulating signal. Mount an adjustable limit switch on each adjustable diffuser actuator to energize a light on the blower control panel when the vanes are at the maximum closing setting.

b. Provide an indicating manual/auto station with remote setpoint capability at the blower control panel. Provide an emergency manual operator for the vanes. The motor actuator shall operate on 480 volt, 3 phase, 60 Hz. Actuator shall be provided with a unit mounted disconnect switch.

3. Inlet Air Guide Vane (IGV) Assembly:
   a. Mount inlet guide vane assembly integral with each air blower. Vanes shall be multileaf and pivoted to produce optimum pre-rotation of the incoming air stream. Bearings shall be of the permanently lubricated type and the linkage shall be readily accessible for lubrication. Vanes shall be mechanically stopped for a maximum closed setting of 75 degrees (15 degrees open). Guide vane assembly shall be installed complete with a motorized actuator to operate from a 4 to 20 mADC modulating signal. Mount an adjustable limit switch on each guide vane actuator to energize a light on the blower control panel when the vanes are at the maximum close setting. Provide a 4 to 20 mADC signal for remote indication of guide vane position. Provide an emergency manual operator for the vanes. Motor actuator shall operate on 480 volt, 3 phase, 60 Hz. Actuator shall be equipped with unit mounted disconnect switch.

J. Product and Manufacturer: Provide one of the following:
   1. Lone Star Blower
   2. Turblex
   3. Roots Division of Dresser Industries
   4. Atlas Copco

2.3 DETAILS OF CONSTRUCTION - BLOWER DRIVER

A. Variable Frequency Driver:
   1. See Specification 16269.

B. Electric Motor Driver:
   1. Motors shall conform to the requirements of Section 11000, Electric Motors.
   2. Motor rating and characteristics and all materials and construction shall be in accordance with the latest standards of ANSI, IEEE and NEMA as applicable.
   3. Motor shall be a open drip proof motor with Class H insulation, high efficiency type design, with a maximum speed of 3600 rpm.
   4. Motor shall be suitable for operation on 480 volt, 3 phase, 60 Hz power.
   5. Motor shall have sufficient torque and thermal capacity to successfully start and accelerate the coupled blower from the plant power system without subjecting the motor to excessive heating. The stator windings and end turn connections shall be fully brazed to withstand full voltage starting regardless of whether reduced voltage startup is utilized. The motor shall be not less than the horsepower required in the Schedule of Service Conditions. Motor shall have a 1.15 service factor.
   6. Locked rotor current shall be as specified in NEMA standards.
   7. Motor enclosure shall be for top air inlet and discharge. Apply acoustical treatment as required to comply with noise limitations specified herein.

8. Motor frames and end shields shall be heavy fabricated steel or cast iron of such design and proportions as to hold all motor components rigidly in proper position and provide adequate protection for the type of enclosure employed.
9. Provide space heaters, 120-volt, single phase.
10. Shaft shall be made of high-grade machine steel or steel forging of size and design adequate to withstand the load stresses normally encountered in motors of the particular rating.
11. Stator cores shall be made of low loss, non-aging electrical sheet steel with insulated laminations. Stator coils shall be form wound and of identical size, shape, insulation and number of turns.
12. Stators shall be form wound and insulated with glass and mica applied directly to the coils. Motors shall have a Class H non-hygroscopic epoxy vacuum/pressure impregnated insulation system, limited to the temperature rise specified herein. All connections shall be brazed, with no crimp connections used except for terminals. A coil bracing for stator end turns shall be utilized to eliminate coil movement and vibration during starting and running conditions. Stator design and construction shall be such as to secure mechanical rigidity to withstand repeated full voltage starts and eliminate overheating.
13. Rotors shall be made from high-grade steel laminations adequately fastened together, and to the shaft. Rotor squirrel cage windings may be cast or extruded copper alloy bar-type construction with brazed end rings.
14. Bearings shall be anti-friction type, oil lubricated. Bearings shall be designed to prevent leakage of oil and entrance of dust, shall contain a large oil sump with settling chamber, and shall be equipped with a guarded sight gauge, plugged drain cock, and filler connection. Bearings shall have a minimum B-10 life of 100,000 hours.
15. Motors shall have a chemical resistant, corrosion and fungus protective coating on all interior surfaces. Exterior prime coating shall be compatible with the field applied finish coating.
16. Enclosures shall have stainless steel screen and shall be protected against corrosion, fungus and insects.
17. All fittings, bolts, nuts and screws shall be plated to resist corrosion. Bolts and nuts shall have hex heads.
18. Motor shall have a stainless-steel manufacturer's nameplate which shall provide the following: type, frame, insulation, class, HP, full load current, RPM, centigrade degree rise, manufacturer's name and serial number model, voltage, locked rotor KVA code, bearing numbers and a connection diagram.
19. Main terminal box shall be NEMA 1 and provide ample room for stress cones. Manufacturer shall furnish lightning arrestors and surge arrestors mounted in the terminal box.
20. Main terminal box shall have provisions for mounting differential protection current transformers and for proper termination of shielded cables. Sufficient space shall be provided for 5 KV shielded, EPR insulated, PVC jacketed cable terminations. Leads from each phase winding shall be securely clamped near the point where they exit the stator frame and shall be clearly identified.
    a. Furnish and install within the motor terminal box or near (5 feet-0 inches maximum) in separate enclosures, a bank of capacitors to raise the power factor of the assembly to unity at rated load, if possible, without

jeopardizing the integrity of the machine due to transient over voltages produced by switching off a running motor.

21. Motors shall have the following minimum efficiencies:
    a. Minimum full load efficiency of 94 percent when operating at rated voltage and frequency.
22. Motors shall be free of objectionable noise and vibration. Motor sound pressure level shall not exceed 90 dbA at five feet under free field, no load conditions in accordance with IEEE Standard 85. Vibration level measured on the bearing housing shall be in accordance with values shown in NEMA Standards.
23. Motors shall be rated for continuous operation in an ambient temperature not exceeding 50°C. The temperature rise as measured by the resistance method shall not be more than 80°C, or 85°C by embedded detector at design horsepower nor more than 90°C by embedded detector at 1.15 service factor.
24. Six platinum resistance temperature detectors (RTDs) as specified in Section 17052, Process Control System Primary Sensors and Field Instruments, shall be distributed about the stator, each being embedded between upper and lower coil in the coil slot. Leads shall be brought out to a separate terminal box through a flexible sleeve which will protect the leads and assure their flexibility after dipping and baking of stator.
25. One dual type resistance temperature detector of the same rating and material as defined above shall be provided for each motor bearing and wired to a separate terminal box.
26. Motors shall be of the open self-ventilating type, taking cooling air from and discharging to the blower room. Cooling air discharge shall be upward from the motor enclosure. Suitable fan blades shall be installed at both ends of rotor to force air axially along the rotor with minimum windage noise. Ventilation openings shall be provided with suitable grilles or baffles, and screens.
27. Product and Manufacturer: Provide one of the following:
    a. General Electric Company.
    b. Siemans Allis.
    c. Reliance Electric.
    d. Or equal.

2.4 BLOWER-DRIVER COUPLINGS

A. Flexible couplings, selected on the basis of a system torsional analysis, shall be of the gear or flexible disk type designed to permit axial, horizontal and vertical adjustments, and shall provide for changes of angular and parallel misalignment between the blower and motor.

B. Couplings shall be designed to hold the end play of the motor rotor within acceptable limits and shall be designed with a service factor of 1.50.

C. Provide an OSHA approved stainless steel coupling guard of minimum 14 gauge and install over the coupling.

2.5 MOUNTING AND VIBRATION LIMITATION

A. Each blower and electric motor, coupled together, shall be factory mounted on a common steel base, properly braced to form a rigid support for the entire assembly. The units shall be factory aligned on the base prior to shipment. The common base shall be designed and constructed such that it will fit upon a concrete support pad while properly supporting the blower and motor thereon. Suitable anti-vibration pads, bolts, or pins shall be sized and furnished by the manufacturer for use when mounting the common base on the concrete support pad.

B. Blower, motor, base, and shafting shall be designed and installed to limit field vibration to the "satisfactory" maximums recommended by the International Organization of Standardization ISO 3945 (latest revision), "Mechanical Vibration of Large Rotating Machines with Speeds of from 20 to 200 rps - Measurement and Evaluation of Vibration Severity in Situ." In no case shall the field vibration velocity measured at any bearing exceed 0.18-inches per second (rms) for motor driven blowers. These limits shall be met when operating at any point within the specified range of operation at any operating speed.

2.6 ACCESSORIES

A. Flexible Connectors:
   1. Provide suitable reinforced flexible connectors for both inlet and outlet piping rated for minimum 25 psi pressure and 300°F air temperature. Flanges shall be ANSI 125 pound. Harness each joint with four tie rods connected to plates fastened to flanges to allow maximum elongation of the joint.

B. Silencers:
   1. Blowoff Silencer:
      a. Blowoff Silencer shall be inline type with flanged connections to piping.
      b. The blowoff silencer shall include a diffuser section and a splitter muffler section.
      c. The muffler shall be capable of reducing blowoff sound to below 80 dBA five feet from the muffler discharge.
      d. The muffler shall be capable of continuous operation to relieve the maximum blower capacity to atmosphere under all operating conditions.
      e. Construct perforated metal internals and solid casing using a minimum of 14 ga. Type 16L stainless steel.
      f. Product and Manufacturer: Provide one of the following:
         1) Stoddard Silencers
         2) Or equal.
   2. Discharge Silencer:
      a. The discharge silencer shall be an annular type dissipative muffler.
      b. The muffler shall have a maximum pressure drop of 0.80-inches of water column at the design condition.
      c. The muffler shall, at a minimum, provide the following insertion loss:

	Octave Band Center Frequency (Hz)					
	125	250	500	1000	2000	4000

Minimum Insertion Loss (Db)	8	15	25	30	35	30

d. Materials of Construction:
   1) Construct muffler using perforated metal internals and solid casing having a minimum of 14 ga. Type 316 stainless steel. Case shall be constructed to withstand internal pressure of 14 psig.
e. Product and Manufacturer: Provide one of the following:
   1) Universal Silencer, Division of Nelson Industries, Model SUS.
   2) Or equal.

3. Protective Devices:
4. Provide a thermocouple sensing probe in the blower discharge piping from each blower. High temperature shall indicate impending high temperature level and shall actuate an alarm and high-high temperature shall shut down the blower and actuate an alarm.
5. Furnish a pressure switch for installation in the blower discharge piping from each blower. Pressure switch shall be adjustable from 0 to 10 psig. Upon a high discharge pressure condition, blowers shall shut down and actuate an alarm.
6. Furnish two-radial-plane vibration sensors 90 degrees apart at each radial pinion bearing and one axial sensor for the pinion shaft for each blower. Furnish an accelerometer on the motor housing of each blower. High vibration at any sensor shall actuate an alarm and high-high vibration shall shut down the blower. The required field instruments for monitoring and alarm functions shall be supplied by the manufacturer in accordance with the requirements of the Section 17266, Process Control System Instruments and Devices. Reference Article 2.9 of this Section for vibration system specification.

C. Discharge Cone:
   1. Each blower outlet shall be supplied with a discharge cone to increase the blower outlet size to the large diameter air discharge piping. The length of the discharge cone shall be aerodynamically designed to minimize pressure drop and discharge turbulence; maximum sidewall angle increase shall be five degrees per side (ten degrees, total). The discharge cone shall have a discharge flange and bypass flange size as shown on the Drawings. Instrument connections shall be provided, as required. The discharge cone shall be constructed of Type 316 stainless steel.

2.7 BLOWER TERMINATION BOXES

A. Provide a blower 480 VAC power termination box, one for each blower suitable for mounting on the blower skid. Terminal blocks shall be provided to centrally terminate all skid mounted devices requiring 480 volt supply. Box shall be NEMA 12.

B. Provide a blower control termination box, one for each blower suitable for mounting on the blower skid. Terminal block shall be provided to centrally terminate all blower system skid devices. Six-inches of separation shall be

provided between analog and 120 VAC wiring. Box shall be NEMA 12 and of sufficient size for all required signals plus 20 percent spare terminals.

C. Conduit and Wire:
   1. Provide all conduit and wire for blower skid devices to the blower termination boxes.

2.8 BLOWER CONTROLS

A. LOCAL CONTROL PANEL (LCP)
   1. Each blower shall be furnished with a skid-mounted PLC-based sequencing panel. All controls and instruments shall fail into a safe condition. The controls shall be designed such that the blower cannot operate unless the controls are energized, nor can they operate with any defective controls.
   2. The NEMA 12 rated enclosure shall be mounted on the blower skid, and fitted with a hinged door for front access. CONTRACTOR shall provide and wire the 120/60/1, 30 amp power supply. Each assembled control panel shall carry a UL label certifying the assembled industrial control panel complies with UL 508.
   3. Each blower LCP shall contain controls for blower motor starting, surge and overload detection, shutdown control and sequencing, alarm and emergency shutdown systems, inlet guide vanes, variable diffuser vanes, discharge valve, bypass valve.
   4. Each LCP shall contain a main power disconnect, which interlocks the enclosure door. Starters for variable vane operators (air/oil cooler) shall be mounted inside the panel. Provide for power distribution to feed motorized valve motor controllers located at the valves. Provide a separate 24V DC regulated power supply. Isolate all low voltage variable power signals entering the LCP. Soft starter for the main drive motor is located in the motor control center (MCC) and provided by others.
   5. An Allen Bradley Compact Logix, Siemens S7-ET200SP, or equal PLC shall start and shut down the blower in a permissive sequence, receive input, monitor and control operating variables. The PLC shall also contain a program for continuous optimization of blower efficiency with respect to changes in capacity, inlet temperature, and differential pressure across the blower.
   6. Identify each end of each wire by a unique wire number printed on a heat shrunk sleeve marker.
   7. Provide an Operator Interface touch sensitive, HMI screen that incorporates all controls, alarms, and meters in easy-to-interpret color screens. Operator Interface shall have a 15-inch minimum screen.
   8. The operating screens (pages) shall be custom tailored to provide not only start-stop and operational mode interface, but also alarm status, and diagnostics. The following general design protocol shall be incorporated:
      a. When an alarm occurs, it is displayed on all screens, and a message screen appears to identify the problem.
      b. Operator Interface scales, graphs, and chart scaling shall be reset without using a personal
      c. computer.

9. Provide touch sensitive screen point control via the Operator Interface screens, status indication, and readout for the following functions.
    a. Starter blower
    b. Stop blower
    c. Local control
    d. Remote/Auto control
    e. Open blow-off valve
    f. Close blow-off valve
    g. Open discharge valve
    h. Close discharge valve
    i. Open variable diffuser vane
    j. Close variable diffuser vane
    k. Open inlet guide vane
    l. Close inlet guide vane
    m. Low oil pressure indicator
    n. High oil temperature indicator
    o. Surge control indicator
    p. Inlet air high temperature (recirculation surge) indicator
    q. Inlet air filter high differential pressure indicator
    r. High vibration indicator
    s. General alarm indicator
    t. Global alarm reset
10. Additional selector switches, pushbuttons, and indicators shall include:
    a. Service/Normal/Test – Located on the Operator Interface. This touch sensitive screen point allows permissive start of the blower components only in the Service Mode. When in Test Mode, this diverts MCC start signal to test logic that simulates motor start to facilitate testing of the system without starting the drive motor.
    b. Emergency stop mushroom button on panel door
    c. Separate, non-resettable hour meter on panel door
11. Monitor and indication of all analog signals shall be displayed on the Operator Interface, including, but not limited to:
    a. Motor amps
    b. Variable diffuser vane position
    c. Inlet guide vane position
    d. Temperature signals
    e. Pressure signals
12. The blowers shall start under an automatic sequence initiated by the local start signal or the remote start signal when in remote/auto control. Upon signal to start, the PLC shall confirm that the inlet guide vanes and variable diffuser vanes are at minimum, the blow-off (bypass) valve is open, and the discharge valve is closed. All vanes and valves shall be equipped with limit switches on both the open and closed position to indicate position. If components are not properly positioned, they shall move to their respective start positions automatically via the PLC logic. Once all pre-start permissives are confirmed, the blower motor shall be started.
13. A feedback signal from the MCC (by CONTRACTOR) shall confirm that the main drive motor starter has been energized. When the blower reaches operating speed, as determined by the motor start sequence, the PLC shall

open the inlet guide vanes and discharge valve, close the blow-off valve, and release control of the inlet guide vanes and variable diffuser vanes to local/remote control. If the components are not correctly positioned, interlocks shall be provided to prevent blower operation after the delay time during start-up. Provide sequence fail alarm and trip if any portion of the start, run, or stop sequence is not properly executed. The Operator Interface shall annunciate the function that caused the trip.

14. The surge detection system shall sense unbalanced/surge conditions by use of pressure sensing devices. Detection of surge conditions shall trip the blower off-line.
15. Motor overload protection software shall be provided to control the maximum vane setting on the blower, so that motor current does not exceed a pre-set level.
16. There shall be three means of shutting down the blower:
17. Normal Stop - Initiated by pushing the stop button or remote stop. The unit normally stops such that no surging occurs.
18. Soft Stop – Initiated by:
    a. High oil temperature
    b. High inlet air temperature (recirculation/surge)
    c. Discharge valve has not fully opened within two (2) minutes after receiving feedback signal from MCC
    d. Blow-off valve has not closed within five (5) minutes after receiving feedback signal from MCC
    e. Surge
        1) Soft stop shall de-energize the main drive motor eight (8) seconds after alarm initiation to allow the blow-off valve to partially open.
19. Emergency Stop – Initiated by:
    a. Pushing emergency stop button
    b. Low-low oil pressure
    c. High vibration
    d. No feedback signal from MCC during Start Sequence
    e. Loss of feedback signal from MCC during Normal Operation
    f. Sequence failure during start-up
    g. PLC failure
        1) Emergency stop shall de-energize the main drive motor immediately. Normal stop functions follow.
20. Data communication shall be provided between the PLC's, located in each LCP, the MCP, and the plant computer systems. This compatible interface shall be the responsibility of the systems integrator; however, the Manufacturer shall actively participate in this compatible interface. CONTRACTOR shall field wire all items between components, as follows:
21. Data communication to/from the LCP shall be as follows via PLC interface:
    To plant process control (for blower monitoring purposes)
    a. Blower on
    b. Blower off
    c. Common alarm
    d. Control status – Local or remote/auto
    e. To MCP (Master Control Panel)
        1) Blower ready for start

2) Blower on
3) Maximum air flow
4) Minimum air flow
5) Common alarm
6) Blower in remote/auto

f. To and From MCC (Motor Control Center) – (Hardwired digital signals by CONTRACTOR)
g. Motor start signal to MCC (digital)
h. Run confirmation signal (digital feedback from MCC)
i. MCC alarm (digital)
j. Motor amps from MCC (analog)

B. MASTER CONTROL PANEL (MCP) (FOR REFERENCE)

1. A freestanding, NEMA 12 enclosure with a PLC-based sequencing program and 8″ or 9″ Operator Interface HMI shall be provided and tested by the Equipment Supplier for starting and stopping process air blowers automatically and to facilitate set point control. CONTRACTOR shall provide and wire the 120/60/3, 30 amp power supply.
2. The MCP shall provide air header pressure control over a range of 4 to 10 psig with any or all of the blowers in service. The PLC shall receive the main air header pressure 4-20 mA signal. The main air header pressure variable input is compared with an air header set point, with the MCP directing increase or decrease of on-line blower volume to maintain the pre-set air header pressure. The discharge pressure set point shall be adjustable from the MCP or from a remote serial or analog input provided by others.
3. The MCP shall provide air header pressure control for the process air blowers as specified by the Equipment Supplier including fixed mode in which the set point is manually adjusted via controls on the front of the control panel.
4. The MCP shall have process integrating control loops for each air flow meter and air flow control valve. The air flow meter shall be used as the control function and air flow control valve as the controlled function. Maximum and minimum air flow set points and warning alarms shall be based on design parameters set during the submittal stages by Equipment Supplier.
5. The PLC shall bring blowers on and off-line and increase/decrease on-line blower capacity based on cascade control logic. The result being a gradual increase/decrease of air throughout the entire range of one (1) to two (2) blowers on-line. In the event of a blower failure, the next blower in the pre-selected start sequence shall come on-line.
6. The programmable electronic Operator Interface shall have multiple color screens to display operating variables, valve positions, and other relevant data. Operating screens shall have a touch sensitive screen point to select the start sequence of the blowers, a touch sensitive screen point for pressure set point adjustment and the local/remote touch sensitive screen point for local or remote pressure or most open valve system control. The operation shall be programmed to be user friendly by providing sufficient prompting that an operator can intuitively follow through the commands to operate the blower system.

a. Displays and controls shall be provided to monitor all process variable input for master control and to monitor and modify set points, as required.
b. The monitor shall display screens identifying the blowers on-line including the lead blower and the ability to modify the lead blower selection.
c. The monitor shall provide options for control of the blowers and air flow control valves as a manual function, air header pressure controlled via manual set point.

7. The MCP shall have status indicators for each blower as follows:
   a. Blower in remote
   b. Blower ready for start
   c. Blower on
   d. Common alarm
8. External signals from the MCP to each LCP shall be as follows:
   a. Blower start/stop signal
   b. Increase air flow
   c. Decrease air flow

2.9 TESTING

A. One of each size main drive motor shall be given a standard, short commercial, non-witnessed test in accordance with IEEE test procedures. A certified motor data sheet shall be furnished for approval prior to shipment.

B. Each blower shall be given a witness test in accordance with the ASME Power Test Code for Centrifugal Compressors and Exhausters, PTC-10-1997 edition or ISO 5389-2005. The test shall include determination of the surge point and verification of the guarantee points. Test and calculation tolerance shall not exceed ± 4%.

C. Test results of the motors, blowers tests shall be included in the Operations & Maintenance Manual.

2.10 ANCHOR BOLTS

A. Furnish anchor bolts and nuts of ample size and strength for the purpose intended, sized by the equipment manufacturer. Provide hooked anchor bolts for direct embedment during placement of concrete. Anchor bolt materials shall be of Type 316 stainless steel conforming to the requirements of Section 05051, Anchor Bolts, Toggle Bolts and Concrete Inserts. Refer to and comply with the requirements of Section 03300, Cast-In-Place Concrete and Section 03600, Grout.

2.11 TOOLS AND SPARE PARTS

A. The Manufacturer shall furnish all special tools and appliances necessary to disassemble, service, repair, and adjust the equipment and appurtenances. One set of the following spare parts shall be furnished for each air blower model:
   1. For each blower:

a. One complete set of all bearings for the blowers
b. One complete set of o-rings, gaskets, and seals for the blowers
c. One actuator for inlet guide vanes
d. One actuator for variable diffuser vanes
e. One set of oil filter cartridges for each unit
f. One set of oil breather cartridges for each unit
g. One set of primary inlet air filters for each unit

2. For each electric motor driver:
   a. One complete set of bearings.
   b. One set of all gaskets and seals.
   c. One spare flexible coupling for electric drive and blower.
3. Furnish two sets of any special tools required for normal operation and maintenance.

B. Spare parts shall be packed in sturdy containers with clear indelible identification markings and shall be stored in a dry, warm location until transferred to the OWNER at the conclusion of the Project.

2.12 SURFACE PREPARATION AND PAINTING

A. Blowers, motors, drives, frames, baseplates, appurtenances, etc., shall receive shop primer and shop finish coating conforming to the requirements of Section 09900, Painting. If any damage to the paint system occurs, the equipment shall be repainted as directed by the ENGINEER.

B. Surface preparation and painting shall conform to the requirements of Section 09900, Painting.

C. All gears, bearing surfaces, machined surfaces and other surfaces which are to remain unpainted shall receive a heavy application of grease or other rust-resistant coating. This coating shall be maintained during storage and until the equipment is placed into operation.

D. Certify in writing, that the shop primer and shop finish coating system conforms to the requirements of Section 09900, Painting.

2.13 LUBRICANTS

A. Furnish and install oil and grease required for initial operation. Products shall be as recommended by the manufacturer.

PART 3 - EXECUTION

3.1 INSPECTION

A. The blowers, motors, instrumentation, and appurtenances shall be installed by CONTRACTOR in accordance with the instructions of the Manufacturer and Equipment Supplier as shown on the drawings. All piping shall be supported so

as to preclude the possibility of exerting undue forces and movements on the blower flanges. Each blower unit shall be mounted on a flat and level concrete pad or level floor (± 1/4 inch) in accordance with the recommendations of the Manufacturer.

B. CONTRACTOR shall furnish the required piping, pipe supports, flange gaskets, bolts, and nuts.

C. Equipment Supplier shall furnish the required oil and grease for initial operation in accordance with the Manufacturer's recommendations. Inspect all equipment immediately upon delivery to site. All surfaces shall be smooth, free of voids and porosity, without dry spot, crazes, or un-reinforced areas. If damaged, notify ENGINEER and manufacturer immediately.

D. Do not install damaged equipment until repairs are made in accordance with manufacturer's written instructions and approved by the ENGINEER. Only minor repair work shall be permitted in the field. All other damaged items shall be sent to factory for repair or replacement.

3.2 INSTALLATION

A. Equipment shall be installed in accordance with manufacturer's instruction and recommendations and the approved Shop Drawings. The installation shall be certified on Form 01620-A specified in Section 01331, Reference Forms.

B. All blowers shall be installed on concrete bases, secured with anchor bolts, and grouted with non-shrink grout conforming to Section 03300, Cast-In-Place Concrete, Section 03600, Grout, and Section 05051, Anchor Bolts, Toggle Bolts and Concrete Inserts.

3.3 FIELD PAINTING

A. Field painting shall conform to the requirements of Section 09900, Painting.

3.4 FIELD QUALITY CONTROL

A. Inspection to be performed by Contractor:
   1. Inspect and verify that structures or surfaces on which equipment will be installed have no defects which will adversely affect installation.
   2. Inspect all equipment prior to installation
   3. Promptly report defects that may affect the Work to Engineer.

B. All equipment will be given running tests at the job Site following installation of the equipment and controls. Should the tests indicate any malfunction, Equipment Supplier shall make any necessary repairs and adjustments. Such tests and adjustments shall be repeated until, in the opinion of the Contractor and Engineer, the installation is complete, and the equipment is functioning properly and accurately, and is ready for permanent operation.

C. Equipment Supplier's Services:
   1. Equipment Supplier shall provide written guidance and on-Site advisory assistance in the installation of all equipment supplied herein.
   2. Submit detailed instructions on preparation and installation of the blower equpiment.
   3. Equipment Supplier's factory trained technician shall be provided for installation supervision, start-up and testing services and operation and maintenance personnel training services.
      a. The representative shall make a minimum of four visits to the Site.
      b. The first visit shall be for assistance in the unloading and installation of equipment. First visit shall be for a minimum of 2 days on site, 8 hours on site each day.
      c. The second visit shall be for checking the completed installation, to complete field tests, commissioning activities, and supervise initial operations. Second site visit shall be for a minimum of 3 days on site, 8 hours on site each day.
      d. The third visit shall be to instruct the Owner's personnel in the proper care, operation, and maintenance of the equipment in accordance with Section 01750, Testing, Training and Start-Up. Equipment Supplier's factory trained technician shall test operate the system in the presence of the Engineer and verify that the equipment conforms to the requirements. Third visit shall be for a minimum of 5 days on site, 8 hours on site each day.
      e. The fourth visit shall be to complete the System Operation Demonstration (SOD). Equipment Supplier's factory trained technician shall demonstrate the performance of the equipment to the Owner. Fourth visit shall be for a minimum of 5 days on site, 8 hours on site per day.
   4. Factory Trained Technician Qualifications:
      a. Equipment Supplier shall dispatch factory-trained technicians to service the equipment. The technicians shall be in the direct employ of the Equipment Supplier.
      b. A fully qualified field service department shall support all field service.
      c. Field service shall be available 24-hours per day, seven days per week.
   5. Start-Up and Testing Services: Furnish the services of an Equipment Supplier's factory trained technician to assist/inspect the equipment, conduct pre-operational mechanical checkout of the equipment, place equipment into operation, optimize the performances of the equipment and perform the field performance testing as herein specified.
   6. Emergency Service:
      a. Provide the services of the Equipment Supplier to be present within 24-hours for on-Site emergency services of all the furnished equipment. Emergency service shall be required for failure of any major component of the blower equipment.
      b. Emergency service shall be provided, at no additional cost to the Owner, throughout the one-year warranty period from the day of Owner's Final Acceptance.
   7. Equipment Supplier's factory trained technician shall revisit the Site as often as necessary until all trouble is corrected and the installation is entirely

satisfactory. All costs, including travel, lodging, meals and incidentals, for additional visits shall be at no additional cost to the Owner.

3.5 START-UP AND TRAINING

A. Start-up and training shall be completed for the blowers in accordance with Section 01750 – Testing, Training, and Start-Up. The main air header pressure transmitter, air flowmeters, and air flow control valves shall all be started-up, and the system optimized for automatic, unattended operation. System time lags, speed of valve operation, fine tuning of control loops, and overall time lags shall all be set and optimized based on plant conditions. The entire system of process air blowers, main air header pressure control, and overall process air system automated operation shall be demonstrated to the satisfaction of ENGINEER.

B. The Equipment Supplier shall furnish experienced start-up/service personnel to inspect the final installation and supervise the field start-up tests of the equipment. The services shall be provided as indicated in paragraph above. If there are difficulties in operation of the equipment due to the Manufacturer's fabrication or CONTRACTOR's installation, additional service shall be provided at no extra cost to OWNER.

C. A factory representative, who has complete knowledge of proper operation and maintenance shall be provided for four (4) hours, if necessary, to instruct representatives of OWNER and ENGINEER on proper operation and maintenance, including start-up and shut-down procedures, proper lubrication practices, and troubleshooting of all equipment.

+ + END OF SECTION + +

This page intentionally left blank

SECTION 13311

PLC HARDWARE AND SOFTWARE

PART 1 - GENERAL

1.1 SCOPE OF WORK

A. This Section includes Programmable logic controllers for control of process equipment, process-oriented machinery, and process systems. The current system design shall be expandable in the future, as facility needs increase and are added. The PLC system shall be comprised of but not be limited to what is shown on the Network Diagram. A redundant Main Processor racks shall be provided, and all Inputs and outputs shall be gathered with remote IO such as Allen Bradley FlexIO and communicate with the master PLC over dedicated Ethernet communications. The final IO network shall consist of a Fiber Optic self-healing Ethernet ring routed around the entire facility. However, the early phases of this facility will have minimal IO and empty conduit shall be provided as shown on the drawings and conduit block diagrams to be extended later during subsequent phases.

1.2 RELATED WORK

A. Refer to Section 13300, Instrumentation and Controls – General Provisions

B. Drawings and general provisions of the Contract, including General and Supplementary Conditions and Division 1 Specification Sections, apply to this Section.

C. Section 13315 Human-Machine Interfaces

D. Section 13330 Control Panels and Panel Equipment

E. Section 13335 Control Panel UPS (Single Phase)

1.3 SUBMITTALS

A. Refer to Section 13300, Instrumentation and Controls – General Provisions

B. Product Data: For each type of PLC include dimensions, mounting arrangements, and weights. Also, include manufacturer's technical data on features, performance, electrical ratings, characteristics, and terminal connections.

C. Operation and Maintenance Data: Provide literature detailing routine maintenance requirements (if any) for each PLC component including:
   1. System specifications
   2. Electrical power requirements
   3. Application considerations
   4. Assembly and installation procedures
   5. Power-up procedures
   6. Programming procedures
   7. Explanation of internal fault diagnostics

8. Shut down procedures
9. Recommended spare parts list

1.4 REFERENCE STANDARDS

A. ASTM D999-91: Vibration

B. (CFR) Title 47, Part 18 (European EN 55011 (formerly CISPR 11))

C. CSA Certification Class I, Division 2, Group A, B, C, D Hazardous or non-hazardous locations

D. IEC 60068-2.1 Environmental testing – Part 2-1: Tests - Test A: Cold, 2.2 Environmental testing - Part 2: Tests. Tests B: Dry heat , 2.3, 2.6 Environmental testing - Part 2: Tests - Test Fc: Vibration (sinusoidal) and 2.27 Environmental testing. Part 2: Tests. Test Ea and guidance: Shock

E. IEC 61000 Electromagnetic compatibility (EMC) - Testing and measurement techniques
   1. Part 4-2: Electrostatic discharge immunity test
   2. Part 4-3: Radiated, radio-frequency, electromagnetic field immunity test
   3. Part 4-4: Electrical fast transient/burst immunity test
   4. Part 4-5: Surge immunity test
   5. Part 4-6: Immunity to conducted disturbances, induced by radio-frequency fields

F. IEC 61131-3: Programmable controllers - Part 3: Programming languages

G. IEC 801-3: RFI Immunity

H. IEC 801-5: Ground Continuity

I. IEC 801-2: Electrostatic Discharge

J. IEEE 472-1974/ANSI C37.90/90A-1974 (Surge Withstand) IEEE Standard for Relays and Relay Systems Associated with Electric Power Apparatus

K. MIL STD 461B CS02: RFI/EMI Susceptibility

L. NEMA Pub No ICS2-230.42: Showering Arc Test

M. NSTA Project 1A

N. UL 508 and CSA Standard C22.2 No. 142 (Isolation Voltages)

1.5 QUALITY ASSURANCE

A. Manufacturer Qualifications: A qualified manufacturer shall be capable of providing training, parts, and coordination of emergency maintenance and repairs.

B. There must be at least 3 firms located within 100 miles of the project site that have local staff actively installing, programming, supporting, and maintaining the

submitted PLC for the PLC to be considered as an "or equal" to the listed manufacturers.

C. The programmable controller and all of the corresponding components within the family of controller products shall be manufactured by a company who regularly manufactures and services this type of equipment.

D. The manufacturer shall comply with ISO9001 standards for "Quality Systems- Model for Quality Assurance in Design/Development, Production, Installation, and Servicing".

E. The manufacturer shall provide complete technical support for all of the products. This shall include factory or on-site training, regional application centers, local or factory technical assistance, and a 24/7/365 technical support phone service.

1.6 DELIVERY, STORAGE, AND HANDLING

A. Deliver PLC components in packaging designed to prevent damage from static electricity and physical damage.

B. Store PLC equipment according to manufacturer requirements. At a minimum, store indoors in clean, dry space with uniform temperature to prevent condensation. Protect PLCs from exposure to dirt, fumes, water, corrosive substances, and physical damage. Also, protect the PLC from all forms of electrical and magnetic energy that could reasonably cause damage.

1.7 NOMENCLATURE AND IDENTIFICATION DEFINITIONS

A. AI: Analog Input

B. AO: Analog Output

C. Fixed I/O: A PLC style consisting of a fixed number of I/O, a processor, and a power supply all in one enclosure. Some fixed PLCs have limited expansion ability.

D. CPU: Central Processing Unit

E. DI: Discrete Input

F. Distributed I/O: Hardware specially designed to function as Remote I/O.

G. DO: Discrete Output

H. HMI: Human-Machine Interface

I. IO or I/O: Input and/or Output

J. Modular: A PLC style consisting of cards that are assembled to comprise a complete unit. All I/O, CPU, and Power Supply are dedicated cards. Typically, these cards are inserted into a chassis.

K. Master/Slave: Communication between devices in which one device, the master, controls all communications. The other devices, the slaves, respond only when queried by the master. Typically used in a Remote I/O application.

L. Peer to Peer: Communication between two or more devices, typically PLC's, in which each device can control the communication exchange.

M. PID: Control action, proportional plus integral plus derivative.

N. PLC: Programmable Logic Controller

O. Remote I/O: I/O that is located remotely from the processor. Remote I/O can communicate over a variety of communication protocols and can use standard rack based I/O, or special Remote I/O hardware referred to as Distributed I/O.

P. SCADA: Supervisory Control and Data Acquisition

1.8 SPARE PARTS

A. Supply spare parts equal to the greater of 25 percent or one field-replaceable system components unless noted otherwise.

B. At a minimum, provide the following:
   1. Processors: Provide spare processor unit(s) for each unique processor installed.
   2. Memory Cards: Provide spares for each type of card installed.
   3. I/O Cards: Provide spares for each unique I/O module type installed. Provide two or 25 percent of installed quantity, whichever is greater.
   4. Network interface and communication modules: Provide spare communication modules for each unique communication module installed.
   5. Specialty Modules: Provide as a minimum a spare of each type of module identified.
   6. PLC Power supplies: Provide spare power supplies for each unique power supply installed.
   7. Chassis: Provide spare chassis for each unique chassis installed.
   8. Fixed PLCs: Provide spares for each unique type of PLC installed.
   9. Miscellaneous components (including cables): Provide spares for each unique component installed.
   10. Manufacturer recommended spares: Supply spare parts equal to at least one set.

C. All spare parts shall be packaged to prevent damage during long-term storage. Identified all packages with indelible markings on the exterior describing contents.

D. Provided complete ordering information including manufacturer, part number, part name, hardware and software revision levels, and equipment for which the part is to be used.

1.9 SPARE I/O

A. Each I/O drop and I/O location shall include at least 20 percent (minimum of four) points of each type (AI, AO, DI, and DO) for future use, regardless of whether any of

those point types are used in that drop or location or not. The spares shall be the same type of I/O modules supplied.

B. Spare output points that require the use of an external relay shall be supplied with the external relay.

C. Regardless of the spare requirement, all installed unused points on all I/O modules shall be wired to terminal blocks in the order that they occur on the I/O modules. Unwired spares shall not be acceptable.

1.10 WARRANTY

A. Provide an extended warranty for manufacturer support of PLC hardware and software problems for a minimum of 12 months starting at substantial completion of the project and include software upgrades to the owner at no additional cost.

PART 2 - PRODUCTS

2.1 GENERAL

A. Provide Programmable Logic Controller equipment with the required memory and functional capacity to perform the specified sequence of operation with the scheduled input and output points.

B. Processor Systems shall include processor, power supply, input/output modules, communication modules, redundancy modules, and remote interface modules as required to meet system requirements.

C. Furnish products listed and classified by Underwriters Laboratories (UL), CSA, or FM approval as suitable for purpose specified and indicated.

D. All equipment and devices furnished hereunder shall be designed for continuous industrial service. The system shall contain products of a single manufacturer, insofar as possible, and shall consist of equipment models that are currently in production.

E. All equipment furnished shall be designed and constructed so that in the event of power interruption the systems shall go through an orderly shutdown with no loss of memory and resume normal operation without manually resetting when power is restored.

F. The PLCs shall communicate between the operator workstation and field-mounted transducers, switches, controllers, and process actuators. Communications protocol shall be completely transparent to process operators at the Human Machine Interface (HMI).

G. The PLC shall be capable of stand-alone operation in the event of failure of the communication link to the HMI subsystem.

H. Backup Processor Systems, if indicated on the drawings, shall consist of two chassis with power supplies, each containing a processor, redundancy module and communications module(s). Remote chassis shall be provided with communication modules to meet I/O and communication requirements.

I. Remote Input/Output Units shall include input/output modules, interface modules, communication modules, and power supply to meet system input and output requirements.

J. Agency and environmental specifications:
   1. Electrical supply voltage to the PLC shall be 120 Vac, plus or minus 15 percent, 48-63Hz. PLC system power supplies shall be fused for overload protection.
   2. Vibration: 3.5 mm Peak-to-Peak, 5-9 Hz: 1.0G, 9-150\Hz. The method of testing is to be based upon IEC 68-2-6 and JIS C 0911 standards for vibration. The system is to be operational during and after testing. Vibration Rating of 2.0G maximum peak acceleration for 10 to 500Hz. in accordance with at least one of the following:
      a. Installed rating: DIN rail mounted PLC: 10-57 Hz, amplitude 0.075 mm, acceleration 25-100 Hz, and
      b. Panel or plate mounted PLC: 2-25 Hz, amplitude 1.6mm, acceleration 25-200 Hz.
      c. In compliance with IEC 60068 and IEC 61131.
   3. Shock: 15G, 11 msec. The method of testing is to be based upon IEC 68-2-27 and JIS C 0912 standards for shock. The system is to be operational during and after testing.
   4. Temperature: All PLC hardware shall operate at an ambient temperature of 0 to +55 degrees C (+32 to +140 degrees F), with an storage ambient temperature rating of -25 to +70 degrees C (-40 to +185 degrees F).
   5. Relative Humidity: The Programmable Controller hardware shall function continuously in the relative humidity range of 30 percent to 95 percent non-condensing.
   6. Noise Immunity: The Programmable Controller system shall be designed and tested to operate in the high electrical noise environment of an industrial plant as governed by the following regulations: IEEE 472, IEC 801, MILSTD 461B, IEC 255-4, NEMA ICS 2-230.40, and ANSI/IEEE C-37.90A-1978.
   7. Altitude:
      a. Operation: 0-6,500 feet
      b. Storage: 0-9,800 feet
   8. Degree of protection: NEMA 1 (IP20)
   9. All products shall have corrosion protection.

K. All major assemblies and sub-assemblies, circuit boards, and devices shall be identified using permanent labels or markings indicating:
      a. Modules product type such as analog or digital
      b. Modules catalog number
      c. Modules major revision number
      d. Modules minor revision number
      e. Module manufacturer vendor
      f. Module serial number

L. All necessary cables shall be included. All cables and connectors shall be as specified by the manufacturer. Cables shall be assembled and installed per the manufacturer recommendations.

M. Manufacturers
   1. Provide all PLCs from a single manufacturer. If the PLC manufacturer has authorized third party vendors to provide modules that are compatible with their platforms, then products manufactured by these authorized third-party vendors will be acceptable.
   2. Basis-of-Design Product: Square D - Schneider Electric; Programmable Controllers.
   3. Provide the PLC system by one of the following:
      a. Rockwell Automation Allen Bradley 1756 ControlLogix
      b. Schneider-Electric Modicon Quantum Series.
      c. Siemens S7 Series
      d. or equal

N. Central Processing Unit (CPU)
   1. The CPU shall be, at a minimum, a 16-bit microprocessor that provides system timing and is responsible for scheduling I/O updates, with no user programming required to ensure discrete or analog update. It shall execute user relay ladder logic programs, communicate with intelligent I/O modules, and perform on-line diagnostics. The CPU shall consist of a single module which solves application logic, stores the application program, stores numerical values related to the application processes and logic, and interfaces to the I/O.
   2. The CPU shall sample all the discrete and analog inputs and outputs including internal coils and registers, and service special function modules every scan. The CPU shall process the I/O with user program(s) stored in memory, then control the outputs based on the results of the logic operation.
   3. Supply the CPU with a battery-backed time of day clock and calendar.
   4. The CPU family shall allow for user program transportability from one CPU model to another.

O. Diagnostics
   1. The CPU shall perform on-line diagnostics that monitor the internal operation of the PLC. If a failure is detected, the CPU shall initiate system shutdown and fail-over. The following, at a minimum, shall be monitored: Memory failure, memory battery low, and general fault, communications port failure, scan time over run, I/O failure, and analog or special function I/O module failure.
   2. All diagnostic information shall be accessible to the host communications interfaces and to the PLC program.
   3. The PLC shall have indicators and on-board status area to indicate the following conditions:
      a. CPU run
      b. CPU error or fault
      c. I/O failure or configuration fault.
      d. Battery good
      e. Communications indicator

P. Memory

1. The user program and data shall be contained in non-volatile battery backed memory.
2. Type: CMOS RAM program memory.
3. Memory Backup: lithium battery backup or Flash memory system capable of retaining all memory for a minimum of three months.
4. Backup Battery: The backup battery shall be capable of being replaced without disrupting memory integrity. Provide a visual indication of low battery voltage and a low battery alarm contact.
5. Flash Memory: Upon power loss, the PLC shall transfer internal memory to flash memory before the PLC powers down.
6. The operator should be able to backup volatile memory, including data and program logic onto a personal computer storage disk.
7. The operating system shall be contained in non-volatile firmware. The memory containing the operating system shall be field updateable via a separate update tool.

Q. Programming Environment
1. Programming port: The PLC shall utilize a serial USB or Ethernet port for programming.
2. On-Line programming: Application programs may be modified or stored while the CPU is running, with minimal impact on the scan time.
3. Online programming including runtime editing
4. IEC 61131-3 programming languages supported: Ladder logic, function block, sequential function chart, and structure text.
5. Supply all hardware and software necessary to program the CPU in these languages.

R. Communication Ports
1. The CPU shall be expandable and supplied with additional modules to support the required communication interfaces.

S. Remote I/O Communications
1. The CPU shall be capable of communicating with up to 12 remote base locations at a combined distance of 2500 feet. The CPU shall automatically sample and update all local and remote I/O modules each scan cycle of the CPU.
2. The communication link between the CPU and any RIO chassis shall be as recommended by the PLC manufacturer. For racks located on a link of less than 2500 cable feet, the speed of the communications link shall be greater than 230K baud with RIO scan rate of less than 5 millisecond per RIO.
3. Diagnostic and equipment status information shall be available from each RIO.
4. It shall be possible to communicate with remote I/O racks or other PLCs via fiber optic cable.
5. The remote I/O system shall have available a remote input/output arrangement capable of operation at locations physically separated from the PLC CPU by up to 5,000 feet as detailed on the drawings.
6. Communication with the remote I/O arrangement shall be through cable as recommended by the PLC manufacturer and provided by the PLC system supplier under this specification section.

2.2 REDUNDANCY

A. The PLC shall be supplied with all hardware and software required to produce a completely operational redundant system as shown in the Drawings. Redundancy shall be implemented using a minimum amount of user programming. Warm backup, which is not a standard offering from the PLC manufacturer, is not acceptable.

B. The backup system shall consist of redundant controllers located in separate chassis.

C. The back-up system shall provide bumpless switchover for system outputs. All remote I/O shall maintain their last position until either communications is re-established, or the remote I/O watchdog timer expires.

D. Switch-over between the on-line PLC and the back-up PLC shall occur within 100 milliseconds if any of the following conditions occurs in the on-line unit: Power failure, CPU fault, communications module fault, or change in the on-line unit's mode from RUN to PROGRAM.

E. The switchover shall be transparent to any devices networked to the redundant controller chassis.

F. The system shall automatically cross-load the primary controller's program to the secondary controller.

G. System diagnostics and debugging tools shall be provided to assist in troubleshooting all redundancy equipment.

2.3 POWER SUPPLIES

A. The PLC shall have chassis mounted power supplies to power the chassis backplane and provide power for the processor and applicable modules.

B. Power supplies shall have a clearly visible LED to indicate that the incoming power is acceptable, and the output voltage is present.

C. Power supplies shall feature over-current and over-voltage protection and should be designed to operate in most industrial environments without the need for isolation transformers.

D. Power supplies shall be sized to accommodate the anticipated load plus 30%.

E. DC power supplies shall be capable of handling ripple up to 2.4V peak to peak.

F. AC Line Voltage rating of 85 to 265Vac, 47-63Hz

G. The power supplies shall allow for brown outs of at least ½ of a cycle, a harmonic rate of 10%, and will sustain continuous operation through momentary interruptions of AC line voltage of 10ms or less.

H. Automatically shut down the Programmable Controller system whenever its output power is detected as exceeding 125% of its rated power

I. Provide surge protection, isolation, and outage carry-over up to 2 cycles of the AC line

J. Redundant power supplies will comply with all the requirements of non-redundant power supplies in addition to the features stated below.
   1. The redundant power supplies shall be designed to share the current required by the chassis. In the event of a failure of one redundant power supply, the remaining supply will accommodate the entire load of the chassis without disruption to the chassis activity.
   2. Provide a failsafe fuse that is not accessible by the customer
   3. Provide a solid-state relay connection to allow for failure annunciation when wired to an input module
   4. Diagnostic LED status indicators for Power and redundancy

2.4 CHASSIS

A. Medium and large PLC models shall be chassis based.

B. All system and signal power to the CPU and support modules shall be distributed on the backplane. No interconnecting wiring between these modules via plug-terminated jumpers shall be acceptable.

C. All system modules, main and expansion chassis shall be designed to provide for free air flow convection cooling. No internal fans or other means of cooling, except heat sinks, shall be permitted.

D. All system modules including the processor shall be removable from the chassis or inserted into the chassis while power is being supplied to the chassis without faulting the processor or damaging the modules.

E. Modules shall be designed to plug into a chassis and to be keyed to allow installation in only one direction. The design must prohibit upside down insertion of the modules as well as safeguard against the insertion of a module into the wrong slot or chassis via an electronic method for identifying a module. Electronic keying shall perform an electronic check to ensure that the physical module is consistent with what was configured.

2.5 DISCRETE INPUT AND OUTPUT MODULES

A. General
   1. Digital input and output modules shall provide ON/OFF detection and actuation.
   2. The I/O count and type shall be as required to implement the functions specified plus an allowance for active spares, as noted below.
   3. Modules shall be designed to be installed or removed while chassis power is applied.
   4. Modules shall have indicators to display the status of communication, module health and input / output devices.
   5. Each module shall have the following status indicators.
      a. The On/Off state of the field device.
      b. The module's communication status.
   6. I/O modules shall contain a maximum of 16 points per module.

B. Module Specifications (120Vac Isolated Input Module)
   1. Nominal Input Voltage of 120V ac
   2. On-State Current of 15mA @132V ac, 47-63Hz maximum
   3. Maximum Off-State Voltage of 20V
   4. Maximum Off-State Current of 2.5mA

C. Module Specification (120Vac Isolated Output Module)
   1. Each triac type discrete output shall have an associated interposing relay located in the same control panel. 120 VAC power for relay outputs shall be provided from the associated motor starter control circuit (when used with motor starters) or other 120 VAC source (when I/O is not associated with a particular motor starter).
   2. Output Voltage Range of 74-265V ac, 47-63Hz
   3. Output Current Rating:
      a. Per Point - 2A maximum @ 30 degrees C; 1.0A maximum @ 60 degrees C; Linear Derating
      b. Per Module - 5A maximum @ 30 degrees C; 4A maximum @ 60 degrees C; Linear Derating
   4. Surge Current Per Point of 20A for 43ms each, repeatable every 2s @ 60 degree C
   5. Minimum Load Current of 10mA per point
   6. Maximum On-State Voltage Drop of 1.5V peak @2.0A and 6V peak @load less than 50mA
   7. Maximum Off-State Leakage of 3mA per point

D. Module Specifications (Contact Output Module)
   1. Output Voltage Range of 10-265V ac, 47-63Hz
   2. Output Current Rating:
      a. Resistive - 2A @ 125V ac
      b. Inductive - 2A Steady State, 15A make @125V ac
   3. Power Rating (Steady State) of 250VA maximum for 125V ac inductive output
   4. Maximum Off-State Leakage of 0 mA per point
   5. Configurable States
      a. Fault Per Point - Hold Last State, ON or OFF
      b. Program Mode Per Point - Hold Last State, ON or OFF

2.6 ANALOG INPUT AND OUTPUT MODULES

A. General
   1. Analog input modules shall convert an analog signal that is connected to the module's screw terminals into a digital value. The digital value representing the magnitude of the analog signal shall be transmitted on the backplane. Analog output modules shall convert a digital value that is delivered to the module via the backplane into an analog signal on the module's screw terminals.
   2. Modules shall be designed to be installed or removed while chassis power is applied.
   3. Modules shall have indicators to display the status of communication, module health and input / output devices.
   4. Each analog module shall provide both hardware and software indication when a module fault has occurred. Each module shall have an LED fault indicator and the programming software shall display the fault information.

5. Analog modules shall be software configurable through the I/O configuration portion of the programming software.
6. The following status shall be capable of being examined in ladder logic
   a. Module Fault Word – Provides fault summary reporting.
   b. Channel Fault Word – Provides under-range, over-range and communications fault reporting.
   c. Channel Status Words – Provides individual channel under-range and over-range fault reporting for process alarm, rate alarms and calibration faults.
7. The 24 VDC power for analog instrument loops shall be provided as a part of the system. The 24 VDC power supply shall be derived from the 120 VAC input power circuit to the PLC. The field side of the 24 VDC power sources(s) shall have individual or grouped (of logically associated circuits) fusing and be provided with a readily visible, labeled blown fuse indicator.

B. Isolated Analog Input Module
   1. Input Range of 0-20 mA
   2. Resolution of approximately 16 bits across range
   3. Input Impedance of Greater than 249 Ohms
   4. Overvoltage Protection: 8V ac/dc with on-board current resistor
   5. Normal Mode Rejection of 60dB at 60Hz
   6. Common Mode Noise Rejection of 120dB at 60Hz, 100dB at 50Hz
   7. Isolation Voltage
      a. Channel to Channel - 100% tested at 1700V dc for 1s based on 250V ac
      b. User to System - 100% tested at 1700V dc for 1s based on 250V ac

C. Isolated Analog Output Current Module
   1. Output Current Range of 4 to 20 mA
   2. Current Resolution of 12 bits across 20 mA
   3. Open Circuit Detection – None
   4. Output Overvoltage Protection - 24V ac/dc maximum
   5. Output Short Circuit Protection – 20 mA or less (electronically limited)
   6. Calibration Accuracy - Better than 0.1% of range from 4mA to 20 mA
   7. Calibration Interval - 12 months typical

2.7 COMMUNICATION INTERFACES

A. The PLC will be capable of the following communication protocols as shown on the drawings:
   1. 10BASE-T/100BASE-TX Ethernet communication.
   2. Modbus (RTU and ASCII) for up to 247 slaves
   3. Profibus DP for up to 126 slaves
   4. Rockwell Automation's RIO Protocol
   5. DeviceNet
   6. Asynchronous serial link capable of communicating up to 19.2Kbps

B. When required provide a Communications Interface Module mounted in the chassis or the equivalent port directly on the CPU.

2.8 PLC SOFTWARE

A. The PCSS shall provide a PLC configuration and application development software package complete with documentation and disks. The PLC software package and associated licensing and/or activation shall be installed on the computers shown on the drawings.

B. The software package shall allow on-line/off-line program development, annotation, monitoring, debugging, uploading, and downloading of programs to the PLCs.

C. All required hardware (including cables, cable adapters, etc.) for connection to PLCs shall be furnished.

D. All software licenses required to achieve the functionality described in the Specifications shall be provided.

E. The software package shall include a software license agreement allowing the Owner the right to use the software as required for any current or future modification, documentation, or development of the PLCs furnished for this project.

F. The software provided shall be capable of the following IEC 61131-3 functions:
   1. Ladder logic.
   2. Function block.
   3. Sequential function chart.
   4. Structure text.

G. In addition to the above editors, an add-on instruction editor shall work with any of the above-mentioned editors to create custom reusable function blocks. This software shall allow any of the derived function blocks to be modified on-line.

H. The software shall be Microsoft Windows-based and run on the supplied computers.

I. The software shall include a security feature to prevent unauthorized personnel from modifying and downloading the programs.

J. Provide an I/O simulator which allows the PLC application load program to be tested on a PC with simulated analog and digital inputs and outputs, allowing I/O testing and debugging to be performed in a safe, isolated environment without the need for running the PLC CPU and process I/O boards.

2.9 OPERATOR INTERFACE TERMINALS (OIT)

A. OITs shall be mounted on control panels and shall run interface software separate from the HMI software specified in section 13315 (40 9433).

B. Manufacturers
   1. Provide operator interface terminals (OIT) from one of the following:
      a. Allen-Bradley PanelView Plus, PanelView Plus CE or PanelView Component
      b. Red Lion HMI series
      c. GE QuickPanel View or QuickPanel Operator Interface Family
      d. Or equal

C. Software
   1. The Operator Interface Terminal shall be packaged with configuration and programming software; this software includes one of the following:
      a. FactoryTalk View Studio Machine Edition
      b. FactoryTalk View Studio Enterprise Series
      c. Integrated PanelView Component Software
      d. QuickDesign
      e. Proficy Machine Edition View
      f. DataDesigner
      g. or equal
   2. The integrated OIT software shall have the following features
      a. Trending
      b. Data Logging
      c. Alarms
      d. Graphic Symbols
      e. Animation
      f. Web Publishing
      g. Remote desktop

D. I/O Ports and Devices
   1. The OIT shall have a minimum of one Ethernet 10/100 Mbps for connectivity or programming.
   2. The OIT shall have a minimum of one Serial RS232 port.
   3. The following communication expansion modules shall be available for the selected OIT:
      a. ControlNet, DeviceNet, RIO, DH+, DH485, Modbus Plus and PROFIBUS
      b. GE Fanuc Genius, DeviceNet Slave and PROFIBUS Slave
   4. Compact flash ports shall be Type 2.
   5. The OIT shall have a minimum of one USB port.

E. Display
   1. The OIT display size be a minimum of [15”].
   2. The type of display for the OIT shall be 32 Level Grayscale, Color Active Matrix TFT, or Monochrome Passive Matrix FSTN.
   3. The display resolution shall be a minimum of [320 x 240], [640 x 480] or [800 x 600] pixels.
   4. Display shall support touch screen input. It [will/will not] in addition contain a keypad and a mouse or trackball.

F. Environmental
   1. Rating: OIT shall be rated to maintain the rating of the control panel it will be mounted in.
   2. Temperature: Operating temperature range of the OIT shall range 0-50 degrees C.

PART 3 - EXECUTION

3.1 GENERAL INSTALLATION

A. Maintain area free of dirt and dust during and after installation of programmable controller products.

B. Anchor PLCs within enclosures as recommended by the PLC manufacturer.

C. Ventilation slots shall not be blocked or obstructed by any means.

D. Examine areas, surfaces, and substrates to receive PLCs for compliance with requirements, installation tolerances, and other conditions affecting performance. Proceed with installation only after unsatisfactory conditions have been corrected.

E. Install in accordance with manufacturer's instructions.

F. Unload, unpack and transport equipment to prevent damage or loss.

G. Replace damaged components as directed by Engineer.

3.2 PANEL LAYOUT

A. Coordinate size and configuration of enclosure to meet project requirements. Drawings indicate maximum dimensions for PLCs, minimum clearances between PLCs, and adjacent surfaces and other items.

B. Comply with indicated maximum dimensions and clearances, or with PLC vendors required distances if they are greater then the distances indicated.
   1. Provide spacing around PLC as required by the PLC manufacturer to insure adequate cooling. Ensure that the air surrounding the PLC has been conditioned to maintain the required temperature and humidity range.
   2. Wires entering and exiting PLC components shall be sized to comply with the PLC manufacturers requirements. Doors on all components shall be able to be fully closed when all the wires are installed.
   3. For chassis mounted PLCs, no wiring, wire ducts, or other devices shall obstruct the removal of cards from the rack.
   4. PLC lights, keys, communication ports, and memory card slots shall be accessible at all times. Lights shall be visible at all times when enclosure door is opened.

C. Control panel designer shall provide independent line fuses or circuit breakers, per the PLC manufacturer recommendation, for each power supply, input module, output module, and other modules with separately derived power requirements.

D. Control panel designer shall insure that communication signals, 4-20mA signals (including those with embedded HART), are properly conditioned for the PLC and protected from all sources of radiated energy or harmonics.

E. Each PLC (including all I/O) shall be powered from the UPS power conditioning system in Section 13335.

F. Where multiple mechanical components are provided for process redundancy, their field connections to I/O modules shall be arranged such that the failure of a single module will not disable all mechanical components associated with the process redundancy (e.g., inputs and outputs for redundancy device 1 shall reside on different modules than the inputs and outputs for redundancy device 2, etc.), irrespective of the number of used points resulting from this configuration.

G. Provide all required cables, cords, and connective devices for interface with other control system components.

++ END OF SECTION ++

SECTION 16269

VARIABLE FREQUENCY DRIVES - 600V

PART 1 - GENERAL

1.1 SUMMARY

A. This section includes the design, manufacturing, testing, and delivery to the jobsite of metal enclosed, free-standing Variable Frequency Controller (VFD)(drive), complete with accessories and all auxiliary equipment needed to accomplish the functions required by this specification.

B. This specification shall cover 6, 12, or 18 pulse Variable Frequency Controllers for 230V, 460V and 600V loads.

C. Related Sections
1. 16000 Electrical General Requirements
2. 16075 Electrical Identification
3. 16120 Conductors and Cables
4. 16130 Raceways and Boxes

1.2 REFERENCES

A. The drive shall comply with the following:
1. National Electric Manufactures Association (NEMA) Safety standards for Construction and Guide for Selection, Installation and Operation of Variable Frequency Controller Systems
2. National Electrical Code (NEC) NFPA 70
3. NEMA 250 Enclosures for Electrical Equipment
4. IEC 146 International Electrical Code
5. ISO 9001
6. UL 508 Qualifications
7. IEEE Standard 519
8. Additional standards as listed in project specification 1000 "PROJECT STANDARDS AND SITE CONDITIONS"

1.3 SYSTEM DESCRIPTION

A. The drives will be Manufacturers standard design, suitable for heavy duty industrial use and for the intended service. They will be installed in an industrial facility operating 24 hours a day 7 days a week.

B. Regulations

C. This specification requires compliance with all laws and regulations which may be applicable including the Occupational Safety and Health Act (OSHA), as well as rules, regulations, and standards of the Secretary of Labor.

1.4 SUBMITTALS

A. Submit in accordance with Vendor Data Requirement sheet (attached)

B. Submittal literature, drawings, and documentation shall be clear, legible, and written in English. Failure to comply will result in rejection of submittal.

C. Product brochures must be sufficiently detailed so that an engineering evaluation may be completed on the suitability and part number of the equipment.

D. Submit details of the manufacturing quality assurance/quality control program and any QA/QC certifications.

E. Receipt by Owner or Owner's Representative of all test and calibration submittals is a condition for final payment of the purchase order.

F. Submit written certification that all assembly, fabrication, and manufacturing has been performed in accordance with manufacturer's written QA/QC policy and standards. Receipt of this submittal is a condition for final payment of the purchase order.

G. Submit cost for the services of a factory trained technician or engineer to assist in startup and commissioning. Pricing shall include hourly or daily rate, estimated travel and per diem costs, and minimum number of days recommended for this service.

H. Note any exceptions to this Specification.

1.5 QUALITY ASSURANCE

A. Manufacturer shall be regularly engaged in the production of these drives and shall have in place a quality assurance program to be applied during the preparation and fabrication of the instruments.

B. After Sales Support
   1. Qualified support shall be available either directly from the manufacturing facility or from a network of factory-trained distributors and certified service centers located throughout North America and Canada.

C. Drive manufacturing facility shall be an ISO9001 certified manufacturing facility.

D. Assembly shop to be UL-508 certified.

E. Regulatory Requirements
   1. Instruments shall have a UL listing and are marked and labeled in accordance with applicable codes and standards. If manufacturer's equipment is approved by a recognized testing laboratory other than UL, then the manufacturer shall provide a letter from the local authority having jurisdiction stating that such testing is acceptable to them.

1.6 DELIVERY, STORAGE, AND HANDLING

A. Packing, Shipping, Handling, and Unloading

B. All equipment shall be adequately crated or protected, including export packing where required to prevent damage in handling, transit, and storage at the site.

C. Each item, piece, or subassembly of equipment shall have a securely attached metal tag stamped with the tag number. All crates and boxes shall be stenciled with the tag number. Tags and stencils shall be in a conspicuous place and readable.

D. Transmit to Owner or Owner's Representative the shipping lists and delivery dates prior to the day the equipment leaves the shop. Transmittal receipt must be confirmed by Owner or Owner's Representative prior to shipping equipment.

E. Each shipping piece shall be clearly marked with 2- to 3-inch-high contrasting numbers and/or letters, giving tag number as called out on detail drawing. Piece marking shall be with a non-erasable marker.

F. In addition to the piece marking, a standard 3 inch by 5-inch red shipping tag shall be wired to each shipping lot. This tag shall state the range of tag and mark numbers, Vendor's name and address, owner or Owner's Representative's name, jobsite address and Purchase Order number.

1.7 TAGGING

A. Each piece of equipment and loose accessory shall be tagged with a non-corroding metal tag as described below and securely affixed to the equipment by pins or non-corroding metal screws.

B. Tagging information shall include the Owner's Purchase Order Number, P.O. Item Number, Owner's Equipment Number, Vendor's Name, Vendor's Model Number, Vendor's Shop Order Number, and Voltage stamped on the tag. Letters and numbers must be at least 1/8" (.125 inches) high.

1.8 ACCEPTANCE AT SITE

A. Inspect for visible and hidden damage and immediately notify Owner and Shipper of damage. Return to manufacturer for repair or replacement without compromising the construction schedule.

1.9 STORAGE AND PROTECTION

A. Store and protect equipment in accordance with manufacturer's recommendations. At a minimum, protect equipment from water, excess heat or cold, and construction dirt and debris.
   1. project/site conditions

B. Environmental Requirements
   1. In accordance with specification 1000 "PROJECT STANDARDS AND SITE CONDITIONS"

2. Drive will be located within an environmentally conditioned electrical control room. Location is moderately dusty.

1.10 SCHEDULING

A. Coordinate shipping schedules as per priorities with the Owner or the Owner's Representative.

1.11 WARRANTY

A. The warranty period for the equipment specified herein shall be a minimum one (1) year from the date of commercial operation at Owner's facility or eighteen (18) months from the date of delivery, whichever comes first. Vendor shall retain originals of all test reports through the duration of the equipment warranty period

PART 2 - PRODUCTS

2.1 MANUFACTURERS

A. Allen-Bradley

B. Yaskawa

C. ABB

2.2 GENERAL

A. This specification covers AC adjustable frequency drives for industrial applications.

B. The manufacturer shall not have less than fifteen years of experience in the manufacture of AFD's.

C. The drives shall be manufactured in the United States.

D. All components will be accessible from the cabinet door for service. Drive(s) must be designed for side-by-side, back-to-back, or against the wall installation.

E. Drive harmonics are to be meet the requirements of IEEE 519 at the point of common coupling. If drive by itself will not comply with IEEE 519, furnish line reactors or harmonic filters to achieve compliance.

F. The unit shall be NEMA type 1, freestanding metal enclosed control cabinet with hinged front access door(s), filtered ventilation system (if required) and containing main circuit breaker, static power conversion equipment, by-pass contactors with overloads (if required), and all necessary controls, protection and metering, mounted, wired and tested, including at least the following:
   1. Input disconnect switch, externally operated, with current limiting fuses for inverter. Provide mechanical interlocks with enclosure door.
   2. 115 Volt grounded AC control circuit.

a. Operator controls as shown on the schematic diagram which may include the following:
b. A speed control potentiometer
c. Hand/Off/Auto Selector Switch
d. Emergency Stop Pushbutton

G. Furnish each unit with a nameplate of laminated black and white plastic with beveled edges, with letters engraved through the white finish top lamination, exposing black interior lamination, containing the following information:
1. Unit Number
2. Shop Order Number
3. Horsepower
4. Short Circuit Rating
5. Date Manufactured
6. Drawing Number(s)

2.3 DESIGN CRITERIA

A. Input Power
1. The drive main input power shall be three phase 230 – 480VAC 50/60 Hz
2. The drive shall have a voltage tolerance of +/-10% for all 200V and 400V drives. The voltage tolerance for 600V drives twenty horsepower and above shall be +/-10% and +5/-10 for 600V product below 20 Hp.
3. Input frequency tolerance shall be +/-5% for all ratings.
4. The efficiency of the drive shall be a minimum of 97.0% at full load at full speed. Displacement power factor will be greater than 0.95 lagging over the entire speed range.
5. The Maximum Short Circuit Current Rating of the VFD shall be 200,000A RMS symmetrical for all ratings.

B. Hardware Design
1. Overall hardware design is for maximum flexibility, robustness, serviceability, and reliability for the most demanding applications.
2. Power Terminations are oversized for the drive current rating to allow for flexibility on all power terminations.
3. Drive cabinets contain a minimum of three ground termination points.
4. Power Terminations are 'finger safe' and clearly labeled with both the US (NEMA) standards (L1, L2...T2) and IEC standards (R, S…W).
5. The latest technology in packaging, heat sink design, and cooling is utilized to minimize overall size and weight without degrading performance or functionality.
6. Plastics, where used, are UV resistant.
7. Standard packaging is NEMA 1.
8. Interrupting current rating of 200KAIC for all ratings.
9. Power Semiconductor heat sinks contain one or more thermal sensors monitored by the microprocessor to prevent semiconductor damage caused by excessive heat or fan loss.

C. Converter Section
1. The drive employs diode bridge rectification to convert AC to DC. SCRs and other switching power devices are not used in the converter section of the drive to minimize line notching and RFI.

2. The Converter Section is unaffected by phase rotation/phase sequence.
3. Semiconductors on all ratings are sized (current) to allow full operation and overload capabilities at minimum input voltage.
4. PIV Ratings of the rectifier will be as follows:
   a. 220V drives--rectifier minimum PIV rating of 800V
   b. 460V drives—rectifier minimum PIV rating of 1600V
   c. 600V drives – rectifier minimum PIV rating of 1700V
5. The drive shall have MOVs mounted phase to phase for surge protection.
6. Isolation transformers are not required for operation on most standard distribution systems.
7. The converter section is usable on 50Hz or 60Hz distribution systems.

D. DC Bus Section
1. Overall DC Bus design is passive capacitive filter to minimize ripple and maximize power-loss ride-through.
2. DC Bus capacitance (total filter capacitance) is sized to eliminate any requirement for bus inductance (for filtering purposes) when the DRIVE is used on a three-phase distribution system.
3. The DC bus voltage and current are monitored by the control section to prevent damage to either the drive or the driven equipment.
4. All ratings will contain fast acting fuses in the DC Bus section.
5. 220V drives – bus capacitance voltage rating 400VDC (minimum)
6. 460V drives – bus capacitance voltage rating 800VDC (minimum)
7. 600V drives – bus capacitance voltage rating 1050VDC (minimum)
8. All capacitors have balance/discharge resistors to equalize charge voltage and permit safe discharge on power outage
9. Soft charge circuitry does not utilize power transistors nor time delay relays
10. The DC Bus Section has complete power terminations to allowing:
    a. Rectifier Isolation (positive side)
    b. Addition of extended 'ride through' capacitor bank
    c. Line regeneration using third party units
    d. DC Link inductor
    e. Common DC bus applications
    f. DC input
11. A readily visible LED indicates when DC voltages are present
12. The DC Bus section is designed to permit common DC bussing of multiple drives.

E. Inverter Section
1. The inverter section makes use of the latest generation of IGBT power switching transistors to convert DC to three phase, variable frequency, sinusoidal coded PWM waveform.
2. IGBT initialization testing is performed by the control section on each power up and run command.
3. The inverter section does not require commutation capacitors.
4. All drives have software and hardware to limit reflected wave caused by long motor cable lengths.
5. The IGBT ratings will be as follows:
6. 220V drives – IGBT minimum Vce rating 600V
7. 460V drives – IGBT minimum Vce rating 1200V
8. 600V drives – IGBT minimum Vce rating 1200V

9. All IGBTs have reversed biased diodes (free wheeling) to prevent IGBT failure when subjected to motor discharge spikes
10. PWM switching frequencies are adjustable from 0.5 to 15kHz to 100Hp and 0.5 to 5kHz above to minimize audible motor noise and maximize both motor and drive efficiency.
11. IGBTs are sized (current) to allow the drive to operate at 110% (current) continuous and 150% (current) for up to 120 seconds. On units greater than 100Hp IGBT's will have an overcurrent rating of 130% for 120 seconds.
12. To allow dissipation of regenerated energy, all drives contain a microprocessor controlled dynamic braking transistor. The dynamic braking transistor is an IGBT power semiconductor that is sized to allow 100% motor braking torque when connected to an appropriate resistor.
13. The dynamic braking transistor is fully protected by the microprocessor.
14. The dynamic braking transistor will not 'turn on' when the drive is not actively engaged in controlling a motor.
15. Output currents in each phase are monitored using hall-effect current transducers to enabling control of flux current, torque current, and providing protection to both the drive and driven equipment.
16. The inverter section is capable of sensing and interrupting a phase to phase or phase to ground fault on the output of the drive.

F. Control Section
1. The control section is designed to provide complete monitoring and protection of drive internal operations while communicating with the outside world via one or more user interfaces.
2. The microprocessor used is the latest design CPU with adjustable frequency drive specific circuitry and firmware.
3. Algorithms for sensorless vector speed control, sensorless vector torque control, feedback vector speed, torque, and position control are resident in EEPROM memory and utilized by the microprocessor when applicable.
4. Microprocessor logic circuits are isolated from power circuits
5. Where switching logic power supplies are utilized, they are powered from the DC Bus Section of the drive.
6. Microprocessor diagnostics are performed (on application of power) to prove functionality and viability of the microprocessor.
7. Memory cyclic redundancy check (CRC) is performed (on application of power) to prove integrity of EEPROM and UVPROM memories.
8. Motor diagnostics are performed (on application of power and each start) to prevent damage to a grounded or shorted motor. The motor diagnostics may be disabled when using a low impedance motor.
9. All ratings contain at a minimum the following communications ports;
   a. 1200 to 9600 baud rate, automatic baud rate and parity setting
   b. RS222/RS485 automatic switching port – 1200 to 28400 baud rate,
10. The control section is designed to allow 'quick change' of the interface sections for both configuration and functionality.

G. Interface Section
1. Each drive shall have two user interfaces (in addition to the communication ports) as standard:
   a. Electronic Operator Interface – A 90 X 280 (nominal) Graphical Backlit LCD display with the ability to display multiple parameters on one screen. The EOI

shall provide complete operating, monitoring, and programming functionality. The EOI shall be capable of operation from an external power source and firmware operating system is flash upgradeable and may be customized for special applications. The EOI shall contain a TTL communication port and an RS485 communications port for remote mounting. A Real Time Clock option shall be available for the EOI that allows provides complete data logging in the event of a fault.

b. Terminal Board Interface shall provide complete operation functionality. Standard terminal board interface shall provide eight digital inputs, three digital outputs, four analog inputs, two analog outputs, and one pulse output. Inputs and outputs are independently configurable for both scaling and functionality.

2. The drive shall retain the ability to function with no attached interface.
   a. Output Power
      1) The output voltage is adjustable from 0 to rated input voltage.
      2) The output frequency range is adjustable for a maximum frequency output of 60 Hz.
      3) The output (inverter) section of the drive will produce a PWM sinusoidal coded waveform.
      4) The output power switching devices shall be IGBT devices of the latest design.

2.4 ELECTRONIC OPERATOR INTERFACE

A. The EOI shall provide a convenient method of programming, operating, and monitoring the AFD. Parameters shall be grouped in a logical manner allowing rapid access to all parameters. All parameters are displayed in an easily understandable format using plain English for all items.

B. The graphical display shall allow groupings of multiple, logically associated parameters to be displayed on a single screen.

C. EOI backlighting controls may be configured for the wide range of ambient lighting conditions.

D. The customizable graphical display enables the use of user-friendly units such as feet per minute, gallons per hour.

E. For security, the EOI functionality and access may be limited, and password protected preventing an unauthorized user from accessing parameters, functions, or monitoring.

2.5 FUNCTIONALITY

A. Drive shall contain four sets of independently configurable acceleration / deceleration ramps. Each set is configurable as to both time and pattern. Times are adjustable from 0.01seconds to 6000 seconds.

B. Available patterns are Linear, S-Curve, and Overspeed ‘C’ Curve with both ‘S’ and ‘C’ curves allow user adjustment to customize the pattern

C. Acceleration/Deceleration sets (total four) are selectable via discrete input, Electronic Operator Interface, communications, or automatic switching based on output frequency.

D. An automatic acceleration/deceleration selection is available which dynamically structures each change in speed to match conditions of the driven equipment to minimize shock due to changes in velocity and/or load conditions.

E. Overvoltage stall and overcurrent stall settings prevent damage to the driven equipment should acceleration or deceleration settings exceed the ability of the motor to accelerate or decelerate the driven equipment.

F. Braking
   1. Drive shall have as an integral part of the power and control circuitry an IGBT transistor for dynamic braking. The braking transistor is controlled by the AFD control system and allows, with the addition of an optional resistor, an economical means of rapidly stopping a high inertia load with up to 100% braking torque.
   2. The braking transistor, braking resistor, and associated circuitry are fully protected by adjustable protection parameters eliminating the requirement for an external resistor overload protective device.
   3. In addition to the dynamic braking, DC injection braking configurable for both standard and emergency stops, allowing full motor current applied as DC to rapidly bring a rotating load to a stop.

G. Control modes
   1. The AFD shall have three distinct modes of operation
      a. Speed control as V/Hz sensorless vector, or feedback vector
      b. Torque control both sensorless vector and feedback vector
      c. Position control with feedback vector
   2. The drive has the ability to switch between modes of operation while running.

H. Current Detection/protection
   1. Overcurrent stall adjustable from 0.0 to 250%
   2. Configurable undercurrent detection and response
   3. UL recognized speed sensitive motor FLA trip curves adjustable from 10 to 100% inverter current rating
   4. Motor 150% OL time limits adjustable from 10 seconds to 2400 seconds
   5. OL Reduction Frequencies to optimize the speed sensitive motor overload to the application/motor characteristics
   6. Configurable overtorque detection levels, times, and reactions

I. Critical (skip) Frequencies
   1. To avoid mechanical resonate frequencies, the AFD shall contains three programmable jump frequencies with adjustable bandwidths.
   2. The jump frequencies may be any frequency less than or equal to the programmed value of maximum frequency.
   3. The jump frequency bandwidths are independently programmable from +/- 0.00 to +/- 20.0 Hertz.

J. Load Sharing

1. AFD shall have the ability to share the load among multiple motors mechanically coupled to a common load. Because of variances in motors and mechanical speed reducers, one motor may experience more load than it counterparts and become overloaded. Drooping allows the overload motor to slow down, thus shedding torque and forcing the other motors to pick up the slack.
2. The drooping parameters allow the user complete adjustment over drooping gain, speed droop and multiple load levels, drooping filters, and drooping torque range.

K. Process Control (PID)
1. The AFD shall contain an internal PID control algorithm with adjustable proportional, integral, and differential. Feedback may be configured for direct or inverse reaction and is adjustable to span. PID may be enabled via discrete input, Electronic Operator Interface, or communications. Reaction to loss of feedback is configurable and discrete outputs may be configured to indicate loss of feedback or maximum deviation from setpoint.

L. Electronic Thermal Motor Protection
1. The drive contains four independently configurable electronic thermal motor protection levels. The electronic thermal motor protection level may be selected by Electronic Operator Interface, discrete input, communication protocol, or fixed frequency.
2. The Electronic Thermal Motor Protection is speed sensitive and adjustable for motors with speed ranges of 2:1 to 10000:1 allowing the user to optimize motor protection to suit a variety of motors and applications.
3. The Electronic Thermal Motor Protection levels have configurable 150% motor FLA time limits allowing the user to adjust the I^2T protection slope.

M. Emergency off Modes and Settings
1. Emergency off response is configurable to either Deceleration Stop, Coast Stop, or DC Injection Stop regardless of the standard stop mode. Emergency stop may be operator initiated via EOI, Discrete input (multiple E-Stop inputs allowed), Communication protocol

N. Feedback
1. For process control purposes, the drive will accept feedback signals as either an analog signal, binary digital, BCD digital, communication protocol, or 50% duty cycle pulse train.

O. Input/Output (I/O)
1. As a minimum, the standard control terminal board contains:
   a. Four discrete inputs independently configurable for any of multiple functions, sink or source selectable and 'true/false' on closure software selectable
   b. Two discrete relay outputs configurable for any of multiple functions with form 'C' contacts rated 2 amps/250v
   c. Three analog inputs with adjustable gains and bias and multiple functions
   d. Potentiometer input
   e. Two analog outputs with adjustable gain and bias 0-1ma or 4-20ma switch selectable
2. All control terminal boards are remote mountable (up to fifteen feet) using a standard 25conductor computer cable.

P. Jog
   1. Jog frequency may be configured for any frequency from 0.0Hz to 10Hz. Jog is initiated from an appropriately configured input terminal, Electronic Operator Interface, or communication protocol.
   2. Jog stop method is user configurable to coast, controlled deceleration or DC Injection.
   3. Jog may be configured to allow reversing or only operate in a configured direction.
   4. When jog direction is reverse from direction of motor rotation, the drives jog function will smoothly decelerate the motor to zero then jog in the commanded direction.

Q. Override Control
   1. Override control allows one or more analog signals to act as a trim source to a frequency command. Override may be configured as either a additive (or subtractive) input such as – 5Hz to +5Hz, or as a percent of frequency command. Override may be assigned to any analog input, communication option, or Electronic Operator Interface.

R. Overvoltage Stall
   1. Overvoltage stall prevents faults caused by regeneration. During deceleration, overvoltage stall extends deceleration time when bus levels reach a user configurable level. When applied to overhauling loads, the drive will compensate for rising dc bus levels by momentarily increasing output frequency. Two overvoltage stall levels allow complete configuration and control for most cyclic overhauling loads and high inertia loads.

S. Pattern Run
   1. The Pattern Run feature allows the drive to emulate many of the function of a small programmable logic controller. Useful on any application which requires a set pattern of speed changes, based on either time or contact input, the drive may be programmed for four independent or interactive patterns each consisting of up to 7 changes in speed and/or direction. Each step may be configured to any of the four accel/decel times and patterns, direction, and timed from either step change, speed reached, or contact closure.

T. Preset Speeds
   1. Up to 15 preset speeds may be configured in the drive. Each preset speed may have defined direction, 1 of 4 accel/decel times and patterns, and motor protective set. The preset speed may be selected via input terminals (using BCD selection), Electronic Operator Interface, or communication function.

U. Ridethrough
   1. Ridethrough mode allows the user to configure the drive to utilize motor regenerative voltages to continue operation during brief power outages. Undervoltage detection time and undervoltage stall levels are user configurable items in addition to the drives response to undervoltage conditions.

V. Retry/Restart
   1. The retry/restart drive function allows the drive to smoothly start a rotating load regardless of the direction of rotation. When enabled, the drive will attempt to

restart after a fault. The number of attempts and time between attempts are configurable items.

W. Soft Stall
   1. Soft Stall allows the drive to reduce output frequency when the current requirements of the motor exceed the motor's Electronic Thermal Protection setting. If the current drops below the motors overload protection level within the specified time, the output frequency of the drive will return to the commanded output frequency. Soft Stall is highly effective in preventing motor overload trips when used on fans, blowers, pumps, and other centrifugal loads which require less torque and current at lower speeds.

X. Torque Limiting
   1. Drive shall have a torque limiting function prevents mechanical shock to rotating equipment by allowing a user to establish a maximum torque limit. When enabled, the drive will prevent motor torque in excess of the user programmed torque limit.
   2. Separate Torque Limits are configurable for positive and negative torque, and user adjustable from 0 to 250% motor torque. This allows complete torque control over both the motoring and generating regions on applications such as vibratory feeders and stamping machines.

Y. Torque Speed Limiting
   1. Speed limits unique to torque control modes are configurable for both forward and reverse operation.

2.6 REGULATION

A. Speed Control
   1. Sensorless Vector – 0.1% of motor base speed from 1 to 60HZ

B. Torque Control
   1. Sensorless Vector -- +/-10% of torque setpoint from 50 to 100% of the motors rated torque.

2.7 SOFTWARE AND COMMUNICATION

A. Programming Software
   1. Drive shall be programmable via a computer software program and which shall provide the same functionality as the EOI with the additional capabilities of data logging, trending, storing and restoring multiple parameter sets. Cascading windows allow a user interface similar to the EOI in look and feel while allowing direct parameter access for experienced users. Trending and monitoring functions allow up to three items be graphically displayed on a standard trend chart and logged to a historical data file for future reference.

B. Communications
   1. All parameters are accessible from any of the following drive supported communication protocols.
      a. RS222
      b. RS485

c. DeviceNet
d. Profibus
e. Modbus RTU
f. Ethernet

C. Environment
1. Operating environmental ambient conditions without derating shall be:
a. Temperature: –10 to +40 C
b. Relative humidity: 5 to 95% non condensing
c. Elevation: to 1000 meters (2200 ft)
d. Shock: 0.5 G maximum
2. Storage environmental ambient conditions:
a. Temperature: -10 to +65 C
b. Relative humidity: 5 to 98% non condensing
c. Elevation: to 5000 meters

2.8 LONG LEAD LENGTH

A. All drives shall have software and hardware to limit reflected wave caused by long motor cable lengths. When applied to motors with insulation systems that are compliance with NEMA MG-1-1998 Section IV Part 31, output filters shall not be required when motor lead length are within recommended limits.

B. If motor lead lengths are in excess of recommended limits, provide output filters with the drive.

PART 3 - EXECUTION

3.1 ACCEPTABLE INSTALLERS

A. Contractor installing and commissioning the facility.

3.2 EXAMINATION

A. Contractor shall be responsible for inspecting the jobsite and identifying site conditions which may affect the installation, storage, or operation of the equipment and notifying Owner or Owner's Representative of such conditions.

3.3 PREPARATION

A. Protect equipment from damage during installation.

B. Prepare installation location in accordance with manufacturers recommendations.

3.4 ERECTION

A. Section not used.

3.5 INSTALLATION

A. Install equipment in accordance with manufacturer's recommendations.

B. Do not locate drives where subject to mechanical damage or where subject to washdown or frequent water spray.

C. Securely attach wall mount units to a wall or fabricated support stand.

D. Provide a 3" housekeeping pad extending 2" out from all sides of the drive for floor mount units.

E. Allow sufficient space around the drive to allow for required cooling.

F. Install conduit and cable for power and control.

G. Ground drive in accordance with NEC and manufacturer's requirements.

H. Coordinate installation with other trades and disciplines.

3.6 APPLICATION

Section not used.

3.7 CONSTRUCTION

A. Fabricate and assemble drives and test to assure conformance to specification requirements.

B. Notify Owner or Owner's Representative of factory testing schedule so that they have the option of witnessing the factory tests.

C. Provide each drive with an engraved nameplate of laminated black and white plastic with beveled edges. Letters shall be black on a white background. Nameplates shall contain the following information:
   1. Drive tag number
   2. Shop order number
   3. Horsepower, voltage, phases
   4. Short circuit rating
   5. Date manufactured
   6. Reference drawing numbers

3.8 REPAIR/RESTORATION

A. Repair or restore to previous condition any facility or equipment damaged or disturbed by the installation of the equipment.

3.9 RE-INSTALLATION

Section not used.

3.10 FIELD QUALITY CONTROL

A. Verify installation in accordance with manufacturer's recommendations and with the requirements of this specification.

B. Verify field wiring and equipment calibration.

C. If required by the purchase order, schedule Manufacturer's Field Services representative for startup assistance. Submit report detailing all actions performed by this individual, all findings and recommendations. Report must state that manufacturer's representative has certified the installation in compliance with manufacturer's requirements.

3.11 ADJUSTING

A. Perform any field adjustments required by manufacturer or the manufacturer's representative.

B. Configure all drive parameters required for proper operation. Submit to Owner or Owner's Representative a configuration and startup report documenting all drive settings and containing the following information:
   1. Date of startup/configuration
   2. Name of technician
   3. Tag number and name of drive
   4. Complete list of all configured parameters.

C. If parameters have been downloaded to a computer, submit a CD with this configuration file and labeled with the information required above.

3.12 CLEANING

A. Clean all debris from the equipment. Vacuum out all loose dirt and materials. Wipe down outside of drive.

3.13 DEMONSTRATION

A. Demonstrate proper operation to Owner or Owner's Representative and leave equipment ready for normal operation.

3.14 PROTECTION

A. Protect work at all times from damage by other trades or disciplines. Repair or replace any equipment damaged by other trades or disciplines.

++ END OF SECTION ++

This page intentionally left blank

SECTION 16423

LOW-VOLTAGE MOTOR CONTROL CENTERS

PART 1 - GENERAL

1.1 DESCRIPTION

A. Scope:

1. Provide all labor, materials, equipment and incidentals as shown on the Drawings, specified and required to furnish and install motor control centers and modify existing motor control centers.
2. Where shown on the Drawings, provide a utility metering compartment per the requirements of the Provo Power Company, including CT bus bars, concealed hinge door, 3-point catch and lock, handle seal, and top, bottom and rear barriers and any other equipment required by the Power Co.
3. Motor control centers shall include automatic source transfer equipment as specified herein and as shown on the Drawings.
4. Motor control centers shall be installed in a prefabricated outdoor electrical building as specified and as shown on the Drawings.
5. Provide auxiliary sections with provision for cable or busway entrance as shown on the Drawings.
6. Provide anchorage and support design, including seismic, for motor control centers in accordance with General Electrical Provisions under Division 16.
7. Provide existing MCC modifications as specified herein where shown on the drawings.

1.2 QUALITY ASSURANCE

A. Reference Standards: Comply with applicable provisions and recommendations of the following, except where otherwise shown or specified:

1. UL Standard #845, Electric Motor Control Centers.
2. UL 489 - Molded Case Circuit Breakers, Molded Case Switches, and Circuit-Breaker Enclosures.
3. UL 508 - Industrial Control Equipment
4. UL508C - Power Conversion Equipment
5. UL 1066 - Low Voltage AC and DC Power Circuit Breakers Used in Enclosures.
6. NEMA ICS 1 - Industrial Control and Systems General Requirements
7. NEMA ICS2-322, AC General Purpose Motor Control Centers.
8. NEMA ICS 5 - Industrial Control and Systems: Control Circuit and Pilot Devices,
9. NEMA ICS 6 - Industrial Control and Systems: Enclosures
10. NEMA ICS 61800-2 - Adjustable Speed Electrical Power Drive Systems, Part 2: General Requirements-Rating Specifications for Low Voltage Adjustable Frequency A.C. Power Drive Systems.
11. NEMA 250 - Enclosures for Electrical Equipment (1000 Volts maximum)
12. ANSI/IEEE C37.13 - Low Voltage AC Power Circuit Breakers Used in Enclosures.
13. ANSI/IEEE 519 - Standard Practices and Requirements for Harmonic Control in Electrical Power Systems.
14. ANSI/IEEE 1531 - Guide for the Specification and Application of Active Harmonic Filters.
15. National Electrical Code (NEC) current adoption.
16. NFPA National Fire Protection Association 79, Annex "D" Standards.

1.3 SUBMITTALS

A. Shop Drawings: Submit for approval the following:
   1. Manufacturer's technical information for motor control centers proposed for use.
   2. Outline and summary sheets with schedules of equipment in each unit.
   3. Unit control schematic and elementary wiring diagrams showing numbered terminal points, interconnections to other units, wire colors and wire labels.
   4. Detailed drawings including plan views, elevations, conduit openings, dimensions, weights, shipping splits, etc.
   5. Nameplate schedules.
   6. Component list including metering, protective devices, accessories and control equipment.
   7. All electrical ratings.
   8. Terminal lug sizes.
   9. Accessories as required according to the plans and specifications such as key interlocking diagrams/details, metering, CTs, PTs, control sections, etc.
   10. Design data such as published circuit breaker time-current curves.
   11. Provide seismic anchoring details, coordinated with the equipment mounting provision, prepared and stamped by a licensed professional engineer. Mounting recommendations shall be based upon manufacturer's shake table tests used to verify the seismic design of the equipment.

B. Test reports:
   1. Results of design tests on similar motor-control or motor-circuit protector (MCP) units under actual conditions in lieu of factory tests on the actual units provided.
   2. Submit field test reports showing results of testing performed on the actual equipment for this project.

C. Operation and Maintenance Manuals:
   1. Submit complete installation, operation and maintenance manuals including copies of all Record wiring diagrams, test reports, maintenance data and schedules, description of operation, and spare parts information.
   2. Furnish Operation and Maintenance Manuals in conformance with the requirements of the specifications.

PART 2 - PRODUCTS

2.1 MATERIALS

A. General: Motor control center lineups shall be provided as shown on the Drawings. Motor control centers including structures, appurtenances, and all major components (contactors, circuit breakers, etc.) therein shall be the product of one manufacturer.
   1. Service: Voltage rating and number of wires shall be as shown on the Drawings. Motor control centers shall operate from a 3 phase, 60 Hertz system. 480/277 Volt, 3 phase, 4 wire. UL rated as suitable for service entrance.
   2. Wiring: Complete internal wiring with terminal blocks for field terminations. Color coding shall conform to NFPA 79.
   3. Enclosure: NEMA 1A.
   4. Motor control centers, which contain variable frequency drives, shall be manufactured by the same manufacturer as the variable frequency drives.
   5. Main and tie circuit breakers shall have a symmetrical interrupting rating of 65,000 amps.

6. Main and tie circuit breakers shall be key interlocked to permit only two of three breakers to be closed at any one time. Provide auxiliary dry contacts, one normally open and one normally closed to the Computer Control System on all three breakers indicating when breakers are closed.
7. Circuit breakers with trip ratings over 800 amps shall have integral ground fault protection.
8. Line and load terminations: mechanical type terminals, rated for 75 degrees C (167 degrees F), suitable for copper or aluminum cable of the size required for the cables indicated on the drawings.
9. Provide an Ethernet communications network providing direct connectivity between MCC devices and a system controller and/or HMI, including managed Ethernet switches.
10. Harmonic correction: meet 5% total harmonic current distortion, 5% total demand distortion, and <5% total harmonic voltage distortion levels as defined by IEEE 519 at incoming line terminals of the motor control center.
11. Performance of the harmonic correction unit shall be independent of the impedance of the power source.

B. Construction:
1. Totally enclosed, free-standing structure, dead front, consisting of nominal 20-inch deep, 20-inch wide, 90-inch high front-access-only vertical sections bolted together to form a unit assembly, unless shown otherwise on the drawings. The uppermost operating handle position shall not exceed 6 feet, 6 inches from the floor when the equipment is mounted on an equipment pad. Bottom channel sills shall be mounted front and rear of the vertical sections. Make provisions for field installation of additional sections to each end.
2. Removable lifting angles for each shipping section.
3. Two removable floor sills for mounting.
4. Horizontal wireways top and bottom, isolated from horizontal bus and readily accessible.
5. Isolated vertical wireways with cable supports, accessible through hinged doors, for each controller section.
6. All metal non-conducting parts electrically continuous.

C. Outdoor NEMA 3R Enclosure
1. Outdoor enclosure shall be non-walk-in and meet UL requirements.
2. Enclosure shall have a roof sloping downward toward the rear.
3. Outer sections shall be the same widths as indoor structures, except each end of the outdoor assembly shall have an end trim.
4. The enclosure shall be provided with bolt-on rear covers for each section.
5. Doors shall have provisions for padlocking.
6. Ventilating openings shall be provided complete with replaceable fiber glass air filters.
7. Provide thermostatically controlled space heaters for each structure with adequate wattage to prevent the accumulation of condensed moisture.
8. Power for space heaters, lights and receptacles shall be obtained from a control power transformer within the motor control center. Supply voltage shall be 120 VAC.

D. Bus System and Conductors:
1. Rating: Bus bracing of 65,000 amps symmetrical and bus current capacities as shown on the Drawings.
2. All bus bars shall be tin-plated copper rated to UL heat rise standards.
3. Bus bar connections shall be easily accessible with simple tools.

4. Main Horizontal Bus: Continuous edge mounted, and isolated from wireways and working areas.
5. Vertical Bus: Continuous and isolated by a glass polyester barrier. 300A minimum.
6. Grounding Bus: Full length mounted across the bottom, drilled with lugs of appropriate capacity, as required.
7. Neutral Bus: Insulated continuous through control center drilled with lugs of appropriate capacity, as required.
8. All control conductors shall be Type SIS, No. 14 AWG minimum.

E. Furnish a programmable logic controller to control the operation of the circuit breakers to facilitate automatic switching to alternate sources upon loss of power in a source. The automatic controls shall ensure an open transition source transfer to prevent any two sources from being connected to the same bus simultaneously. The automatic transfer shall occur upon a source undervoltage, frequency out of range, or loss of phase.

F. Unit Compartments:
1. Individual front door for each unit compartment with engraved manufacturer's nameplates identifying equipment. Manufacturer's nameplates to be 1-inch by 3-inches minimum, secured to unit door with two stainless steel screws.
2. Starter and feeder-unit doors interlocked mechanically with the unit disconnect device to prevent unintentional opening of the door while energized and unintentional application of power while door is open, with provisions for releasing the interlock for intentional access and application of power.
3. Padlocking arrangement permitting locking the disconnect device in the OFF position, with at least three padlocks, with the door closed or open.
4. The Drawings indicate the approximate horsepower and intended control philosophy of the motor driven equipment. Provide the NEMA size starter, circuit breaker, control power transformers and thermal overload heater element ratings matched to the motors and control equipment actually supplied, in compliance with the NEC and the manufacturer's heater selection tables. All variations necessary to accommodate the motors and controls as actually furnished shall be made without extra cost to the Owner.
5. Terminal blocks: Mechanical split-type terminal blocks. Groups of control wires leaving the motor control center shall be provided with terminal blocks with numbering strips NEMA 1 minimum motor starter size. Starter units completely draw-out type in Sizes 1 and 2 and draw-out type after disconnecting power leads only in Sizes 3 and 4.
6. Combination starters shall include a motor circuit protector (MCP) in series with a motor controller and an overload protective device. The MCP shall have an adjustable magnetic trip range and a trip test feature. Motor starters shall include a magnetic contactor, NEMA rated with encapsulated magnet coils. three Pole, 600 V, electrically operated, of the types shown on the Drawings, minimum size shall be NEMA Size 1. IEC rated starters shall have continuous current ratings equal to or greater than the continuous current ratings listed in NEMA ICS 2. Starters shall have 120 Volt encapsulated operating coils, an individual control power transformer with primary and secondary fuses, and silver cadmium oxide renewable line contacts.
7. Reversing Starters: Single speed full voltage with two contactors and extra interlocking contacts.
8. Reduced Voltage Starters: Autotransformer, closed-transition type with embedded type over-temperature protection. Set on 65 percent starting tap, unless otherwise noted.

9. Individual control power transformers for all starters, capacity as required for all control circuit devices, 100 VA minimum, Class A insulation, two primary fuses, 120 Volt secondary, one secondary fuse and the other secondary leg grounded.
10. Separate Control: Where control power to starter is provided by a separate power source, a control power fuse shall be provided in the unit and the main disconnect shall be equipped with a normally open contact to isolate the control circuit from the source when the controller disconnect is open. Power source should be identified by yellow conductors, if the source is separated or foreign to the starter cubicle.
11. Motor horsepower shown are preliminary. Circuit breaker trips and starter overload heaters to be coordinated with the actual equipment installed.
12. Auxiliary contacts, relays, timers as required for specified control functions and those shown on the Drawings. Minimum 6 auxiliary contacts.
13. All starter devices, including spare contacts wired to numbered terminal blocks. Each starter shall be equipped with a fused control power transformer, two indicating lights for Run/Stop, Local-Off-Remote (LOR) selector switch with an auxiliary contact which closes when in "Remote", two momentary pushbuttons, an elapsed time meter, a normally open Overload (OL) trip contact, unless otherwise required or shown on the Drawings.
14. Feeder Circuit Breakers: Thermal magnetic type, 65,000 amps symmetrical interrupting capacity.
15. Motor Starter Circuit Breakers: Magnetic trip only motor circuit protectors, 65,000 amps symmetrical interrupting capacity.
16. Provide the following diagrams and tables on the inside of the door for each compartment:
    a. Elementary wiring diagram.
    b. Table of overload heater sizes with the correct heater highlighted.
    c. Table of the motor circuit protector settings with the correct setting highlighted.
17. Sections shown on the Drawings as "SPACE" shall be complete with all necessary hardware for the future installation of a plug-in unit.
18. Where required by the Drawings, furnish automatic transfer switches integrally mounted within the motor control center. Automatic transfer switches shall be in accordance with the specifications.

G. Power circuit breaker: provide the following minimum independent time-current curve shaping adjustments for each power circuit breaker:
    1. Adjustable long time pick-up and delay.
    2. Adjustable short time pick-up, delay, and I2t settings.
    3. Adjustable ground fault pick-up, delay, and I2t settings.
    4. Adjustable instantaneous pickup.

H. Molded case circuit breaker: provide the following minimum independent time-current curve shaping adjustments for each molded case breaker equipped with an electronic trip unit:
    1. Adjustable long-time setting (set by adjusting the trip setting dial or rating plug)
    2. Adjustable short-time setting and delay with selective curve shaping
    3. Adjustable instantaneous setting
    4. Adjustable ground fault setting and delay

I. Protective features: provide the following adjustable protective features at each main breaker location. This protection may be integral to the manufacturer’s standard trip unit offering or may be provided via separate protective relays; however, it shall be furnished as a complete and functional package.
    1. Voltage phase loss.

2. Current phase loss.
3. Line voltage phase unbalance, selectable from 5 to 40 percent of nominal in 5 percent increments.
4. Voltage phase reversal.
5. Overvoltage, selectable from 105 to 140 percent in 5 percent increments.
6. Undervoltage, selectable from 95 to 60 percent in 5 percent increments.
7. Time delay (adjustable from 0 to 8 seconds in 1 second intervals) for overvoltage, undervoltage, and phase unbalance trip and alarm settings.
8. Solid-State Overload Relay
    a. Provide a solid-state overload relay for protection of each motor.
    b. The overload relay shall be designed to directly replace existing electromechanical overload relays and be listed under UL Standard 508.
    c. The overload relay shall have the following features:
        1) Self-powered
        2) Class 10 or 20 fixed tripping characteristics
        3) Manual or automatic reset
        4) Phase loss protection. The relay shall trip in 2 seconds or less under phase loss condition when applied to a fully loaded motor
        5) Visible trip indication
        6) One normally open and one normally closed isolated auxiliary contact
        7) Test button that operates the normally closed contact
        8) Test trip function that trips both the normally and normally closed contacts
        9) A current adjustment range of 3.2:1 or greater
        10) Ambient temperature compensated
        11) Ground fault protection. Relay shall trip at 50% of full load ampere setting
        12) Jam/Stall protection. Relay shall trip at 400% of full load ampere setting, after inrush

2.2 REDUCED VOLTAGE STARTERS

A. Solid State Reduced Voltage Starters
1. Reduced voltage starters: where shown on the Drawings, provide UL and CSA listed solid-state reduced-voltage starters in the motor control center, consisting of an SCR-based power section, logic board and paralleling bypass contactor. Starters shall be sized for continuous operation up to a maximum of 115% of the connected motor full load ampere rating.
2. Power section: six back-to-back SCRs rated for a minimum peak inverse voltage rating of 1500 Volts PIV. Resistor/capacitor snubber networks shall prevent false firing of SCRs from dV/dT effects.
3. Logic board: identical for all ampere ratings and voltage classes with quick disconnect plug-in connectors for current transformer inputs, line and load voltage inputs and SCR gate firing output circuits for ease of testing, service and replacement.
4. Run bypass contactor: intelligent type motor controller to limit contact bounce and optimize coil voltage during varying system conditions, energized when the motor reaches 90% of full speed and close/open under one times motor current.
5. Overload protection: electronic overload protection based on inverse time-current algorithm, capable of being disabled during ramp start for long acceleration loads. Overload protection adjustments via the device keypad shall include:
    a. Motor full load ampere adjustment from 30 to 100% of the maximum continuous ampere rating of the starter
    b. Selectable overload class setting of 5, 10, 20 or 30
    c. Electronic or mechanical reset capability after a fault
6. Provide the following protection features enabled from the device keypad

a. Heat sink over-temperature protection.
b. Improper line-side phase rotation shut down if a line-side phase rotation other than A-B-C exists.
c. Phase loss or unbalance condition shut down if a 50% current differential between any two phases is encountered.
d. Motor stall protection.
e. Motor jam protection.

7. Alarm contacts: Form C normally open (NO), normally closed (NC) contacts shall change state when a fault condition exists and an LED display on the device keypad shall indicate type of fault.
8. Provide the following control function adjustments on the device keypad:
   a. Selectable Torque Ramp Start or Current Limit Start
   b. Adjustable Kick Start Time
   c. Adjustable Kick Start Torque
   d. Adjustable Ramp Start Time
   e. Adjustable Initial Starting Ramp Torque
   f. Adjustable Smooth Stop Ramp Time
9. Pump Control Option: Provide a factory installed control algorithm for pump startup and shutdown sequences to reduce the potential for water hammer in a centrifugal pump system. Upon a start command, the soft starter microprocessor ramps the speed of the motor to achieve a gentle start. The bypass contactors close after the speed reaches its nominal value. Upon a stop command, the bypass contactors are opened and the motor speed shall be decreased in a tapered manner to gradually slow the flow until the motor is brought to a stop. The start and stop ramp times shall be user adjustable and shall be set for the application requirements.
10. Digital interface module: door mounted display used to program the soft starter and monitor parameters including line currents, pole currents, pole voltages, number of starts, and DC control voltage. Soft starter shall display motor status and the previous five fault conditions.

2.3 POWER CIRCUIT BREAKERS

A. Power circuit breakers: constructed and tested in accordance with ANSI C37.13, C37.16, C37.17, and C37.50 standards, and listed per UL 1066 for application in their intended enclosures for 100% of their continuous ampere rating.
   1. Type: insulated case low voltage power circuit breakers.
   2. Mounting: fixed
   3. Closing time: maximum 3 cycles.
   4. Primary contacts: easily accessible wear indicator to indicate contact erosion.
   5. Operator: Manually operated.
   6. Breaker control interface: color-coded visual indicators to indicate contact open or closed positions as well as mechanism charged and discharged positions. Provide manual control pushbuttons on the breaker face for opening and closing the breaker. Breaker flag shall read "Closed" if the contacts are welded and the breaker is attempted to be tripped or opened.
   7. Current limiting fuses: integrally mounted, isolated until the breaker is withdrawn, and coordinated such that the breaker trip device operates before the current limiters. Provide an anti-single-phase device that will trip the breaker in the event of a blown limiter, indicate from the front of the breaker which limiter is blown, and prevent the breaker from being re-closed on a single-phase condition due to missing or blown limiters.

B. Minimum symmetrical interrupting capacity: not less than overall motor control center interrupting rating, with 30-cycle short-time withstand ratings equal to 18 times their frame ratings. Insulated case circuit breakers without an instantaneous trip element adjustment shall be equipped with a fixed internal instantaneous override set at that level. Provide current limiting circuit breakers or fuses where indicated or required to meet the specified short circuit rating.

C. Trip units: adjustable, electronic overcurrent trip device with true three phase RMS sensing of sinusoidal and non-sinusoidal currents, and the following minimum features and functions:
   1. Interchangeable current sensors with their associated rating plug shall establish the continuous trip rating of each circuit breaker.
   2. Trip mode indicators for ground fault, overload and short circuit.
   3. An operator interface display panel showing diagnostic information and metering information.
   4. Arc flash reduction technology: allow a preset maintenance mode with an accelerated instantaneous override trip to reduce arc flash energy.

2.4 MOLDED CASE CIRCUIT BREAKERS

A. Molded case circuit breakers: provide inverse time and instantaneous tripping characteristics, listed per UL 489 for applications at 100% of their continuous ampere rating in their intended enclosure where shown on the drawings.

B. Trip mechanism: quick-make, quick-break, mechanically trip-free over-center switching mechanism operated by a toggle-type handle. Handle shall indicate breaker position. A push-to-trip button on the front of the circuit breaker shall provide a local manual means to exercise the trip mechanism.

C. Contacts: non-welding silver alloy with arc extinction accomplished via arc chutes.

D. Minimum symmetrical interrupting capacity: not less than overall motor control center interrupting rating. Provide current limiting circuit breakers where indicated or required to meet the specified short circuit rating.

E. Trip units for circuit breakers below 250 ampere frame: thermal-magnetic trip units.

F. Trip units for 250 ampere frame circuit breakers and larger: adjustable, microprocessor-based, electronic overcurrent trip device with true three phase RMS sensing of sinusoidal and non-sinusoidal currents, and the following minimum features and functions:
   1. Rating plugs shall be adjustable and interlocked so they are not interchangeable between frames and interlocked such that a breaker cannot be closed and latched with the rating plug removed.
   2. Trip mode indicators for ground fault, overload and short circuit.
   3. An operator interface display panel showing diagnostic information and metering information.

2.5 FUSIBLE SWITCHES

A. Quick-Make/Quick-Break Fusible Switches
   1. Type: quick-make/quick-break fusible switches rated 30 amperes through 600 amperes, furnished with rejection Class "R" or "J" type fuse clips unless otherwise

indicated. Fusible switches 800 amperes through 1200 amperes shall be furnished with Class L fuse clips.
2. Interlocks: incorporate safety cover interlocks to prevent opening the cover with the switch in the ON position or prevent placing the switch in the ON position with the cover open. Provide defeater for authorized personnel.
3. Lockout: incorporate provisions for padlocking operating handles in the ON or OFF position. Front cover doors shall be padlockable in the closed position.
4. Shunt trip: provide a UL listed 120 VAC shunt trip for 400 through 1200 ampere switches where indicated or required for use with a ground fault protection system.

2.6 INTEGRATED EQUIPMENT

A. The motor control center manufacturer shall integrate and assemble panelboards, dry type distribution transformers, automatic transfer switches, power factor correction capacitors, variable frequency drives, programmable controllers, lighting control systems, surge protection, and uninterruptible power supplies into the motor control center as shown on the Drawings.
   1. Lighting and distribution panelboards: Main lug only, factory wired to transformer, bolt-on branch circuit breakers, size and voltage rating as shown on the Drawings.
   2. Lighting contactors: Mechanically held, 120 VAC coil operator, suitable for tungsten, ballast, or resistive non-motor loads, with over current protection, control transformer and contact ratings and poles as shown on the Drawings.
   3. Dry-type distribution transformers. Transformer shall be high-efficiency NEMA type TP-1 Energy Star labeled, K factor, harmonic mitigating, or low-noise, etc., as shown on Drawings.
   4. AC Variable Frequency Drives: Sine-coded pulse width modulated (PWM), transistorized inverter designed for use with standard induction motors up to 150 hp, constant or variable torque as required for the load application, with current limiting input fuses, line reactors, circuit breaker disconnect, motor isolation contactor, control transformer overload relays and process signal follower card. Drives shall be UL listed for variable or constant torque loads.
   5. Power factor correction capacitors: 600 Volt, three Phase, with current limiting fuses, discharge resistor, sized to correct motor power factor to approximately 0.95.

B. Interrupting ratings of integrated equipment shall be coordinated with the overall interrupting ratings of the motor control center.

2.7 HARMONIC CORRECTION UNIT

A. Harmonic Correction Unit
   1. Harmonic correction units: provide a microprocessor-controlled power electronic device consisting of power semiconductors switched into the AC lines with a modulated output to cancel detrimental harmonic and/or reactive currents. A DC bus shall store power for power semiconductor switching. Harmonic cancellation shall be applied to the entire MCC distribution bus load.
      a. Current Limit: 100% of rating to protect the semiconductors.
      b. Input Power Fuses: Rated 200 kAIC, Class J.
      c. Displacement power factor correction: correct to .95 lagging displacement power factor.
      d. Current transformers: provide 400 Hz rated CT's per power correction system mounted on each of two phases. A third current transformer shall be provided if single or three-phase line-to-neutral connected loads are present downstream from the location of the CT's

e. Operator interface: panel door mounted, digital device to display operating data in alphanumeric format including line voltage, total RMS load current, harmonic current of load, reactive current of load, output harmonic and reactive current of power correction system, fault conditions, and diagnostic information. Provide run, stop, setup, enter, and up/down scroll keys.
f. Output contacts: provide one Form C relay contact, rated 5 ampere at 120/240 Volts, for remote indication of power-on, run, fault and at-maximum capacity conditions.
g. Serial communication port: provide an RS-485 connection for transmitting remote control and diagnostic information.

B. Operating Modes
1. The harmonic correction unit shall automatically inject harmonic current to cancel load produced harmonic current such that the upstream power harmonic current and voltage are reduced to below 5% TDD and 5% THD (V) as defined by ANSI IEEE standard 519 for load demand and voltage distortion limits. The logic of the harmonic correction unit shall monitor the load current CT's to direct the function of the power electronic converter.
2. Reactive current compensation (displacement power factor correction) shall be activated via a digital keypad/display mounted on the door of the enclosure. When reactive current compensation is activated, the harmonic correction unit shall first perform harmonic current correction and then use the remaining capacity to inject reactive current compensation. Leading power factor is not permitted.
3. Each unit shall be designed with a current limiting function to protect the semiconductors. When this level is attained, a message shall be displayed indicating the output capacity is at-maximum capacity and actuate the at-maximum capacity relay. Operation shall continue indefinitely at this level without trip off or destruction of the power correction unit.
4. Two distinct levels of faults shall be employed. Non-critical level faults shall provide automatic restart and a return to normal operation upon automatic fault clearance. Critical level faults stop the function of the unit and await operator action.
a. Faults such as ac line over-voltage, AC line under-voltage, AC line power loss, and AC line phase imbalance shall be automatically restarted. Upon removal of these fault conditions, the power correction system shall restart without user action. Automatic restart will not occur if 5 faults have occurred in less than 5 minutes. During the fault condition, except line loss, the display shall state the type of fault and indicate that automatic restart will occur. The run relay and run LED shall be disabled. The fault relay shall not be enabled unless time out occurs. Upon AC line loss, the power-on relay shall be disabled and no display shall be provided.
b. All other types of faults shall be considered critical and stop the power correction system. The display shall indicate the fault condition and "STOP." The run indicator and relay shall be disabled and the fault relay enabled. User shall be required to initiate a power reset (turn power OFF and ON) to restart the power correction system.

2.8 NETWORK COMMUNICATIONS

A. Provide interface hardware, cabling, and software to enable the following microprocessor-based devices to communicate with the plant-wide ETHERNET/IP network.
1. Industrial managed Ethernet switches as shown on the drawings and as required.
2. Motor controllers

3. Solid-state reduced voltage starters
4. Variable frequency drives
5. Metering devices
6. Motor protection relays
7. Circuit breaker trip units

B. As a minimum transmit the following data from each starter over the network
   1. Percent of operating full load current
   2. Percent thermal memory
   3. Integral contact position detection
   4. Operating status and fault codes
   5. Start/Stop control
   6. Run/Forward-Reverse control
   7. Trip reset
   8. Average current
   9. Ground fault detection
   10. Fault log
   11. Current level warning (adjustable)
   12. Under-load warning (adjustable)
   13. Circuit breaker status, on-off-tripped

C. Communicate metering and trip device data to a plant-wide power management network.

D. Motor Protection Relays
   1. Programmable motor protection relays: Solid state, panel mounted furnished complete with potential and current transformers, zero sequence ground fault transformer and RTD input module. Provide for each starter and reduced-voltage soft starter.
   2. Capable of the following protective functions:
      a. Motor thermal overload.
      b. Phase current heating model to calculate motor thermal capacity during starting and running states.
      c. Phase and residual overcurrent elements
      d. Unbalance/single phase
      e. Load-loss (undercurrent)
      f. Ground fault protection.
      g. Rapid trip/mechanical jam
      h. Motor locked/stall protection
   3. Over-temperature protection: provide configurable thermistor or RTD inputs, including alarm and trip settings, and associated TRIP or ALARM outputs. The following functionality shall be provided:
      a. PTC or NTC Thermistor input.
      b. Assign RTD input as "Off", "Stator" or "Bearing" type.
      c. Four different RTD types: 100 Ohm Platinum, 120 Ohm Nickel, 100 Ohm Nickel, or 10 Ohm Copper
      d. RTD sensor fail alarm
   4. Provide monitoring and metering functions
      a. Current: RMS Values of per Phase, Percent of Motor Load, Current Unbalance, Ground
      b. Temperature of each RTD and/or thermistor input
      c. The relay shall include one programmable analog output which may be assigned to motor load, average phase current, thermal capacity, and RTDs.

d. Latest trip report containing cause, phase, ground, current unbalance, and RTD temperatures.
e. An immediate Overload Alarm feature shall be provided as an early alert during overload conditions.
f. The relays shall retain in non-volatile memory, a trip record of the last 5 causes of trip.
g. The relay shall monitor total motor running time (including start conditions) and the maximum average current present during the last successful start.
h. The relay shall have starter failure detection feature which shall produce an alarm in the event that the motor relay does not detect a starter/breaker open condition after a trip is initiated.
i. The relay shall have the capability to display up to 5 user programmable messages to scan sequentially when the motor relay is left unattended. The user shall be able to select from any setpoint or actual value message to be added to the default message queue. Under normal conditions, if no front panel activity is detected within a settable time, the screen shall sequentially display messages.
j. Product and Manufacturer: Provide one of the following:
    1) Schneider Electric – Square D
    2) Cutler-Hammer - Eaton
    3) General Electric
    4) Or engineer approved equal

5. User interfaces shall include
    a. A large 40-character LCD display, and navigation keys.
    b. Indicator LEDs on the front panel which shall provide a quick visual indication of status.
    c. Ethernet communications native to the unit. Provide options and accessories for integration with the Ethernet TCP/IP network.
    d. Five switch inputs shall be provided for setpoint access, emergency restart, external reset, and two user programmable option switches.
    e. The relay shall accept AC/DC control power.

E. Pilot Devices
1. Control operators: 600 Volt, Heavy duty, full size, 30 mm, oiltight, with NEMA A600 contact rating. Types and quantities as shown on the Drawings.
2. Current sensing relay shall have Independently adjustable trip setting and differential with adjustable trip time delay and LED trip indicator.
3. Indicator lights: Full size, 30 mm, oiltight, full voltage LED push-to-test. Colors and quantities as shown on the Drawings.
4. Elapsed time hour meters: Five-digit, non-reset type, with 120 Volt synchronous motor.
5. Auxiliary contacts: Form C, NEMA A600 rating, as required by the control schemes on the Drawings.
6. A unit-mounted device panel shall have space to accommodate six (6) 30 mm oil-tight pilot-control devices or indicating ammeters, voltmeters, or elapsed time meters. In order to improve maintenance capabilities, the device panel shall withdraw with the unit.

F. Metering:
1. Basic metering: display the following minimum metered values at each main breaker location. This metering may be integral to the manufacturer's standard trip unit offering, or may be provided via separate metering devices, however it shall be furnished as a complete and functional package:
    a. Instantaneous value of phase current

b. Instantaneous value of line-to-line voltage
2. Enhanced metering: meter and display the following values at each main circuit breaker location
   a. AC Phase Amperes +/- 0.5%
   b. AC Phase Voltage +/- 0.5%
   c. Watts +/- 1.0%
   d. VA +/- 1.0%
   e. Vars +/- 1.0%
   f. Power Factor +/- 2.0%
   g. Frequency +/- 0.1 Hz
   h. Watthours +/- 1.0%
   i. Varhours +/- 1.0%
   j. VA hours +/- 1.0%
   k. Watt Demand (10-, 15-, 20-, 25-, 30-, 45-, 60-minute interval)
   l. Voltage (minimum/maximum)
   m. Current (minimum/maximum)
   n. Power (minimum/maximum)
   o. Power Factor (minimum/maximum)
   p. Frequency (minimum/maximum)
   q. Peak Demand
3. Power quality monitoring: display the following values at each main circuit breaker location
   a. %THD (through 31st harmonic)
   b. Peak % THD

G. Control and Metering Transformers
1. Potential transformers: Two-winding, encapsulated type with primary and secondary fuses. Voltage ratings shall be as required for the application.
2. Current transformers: Toroidal type per ANSI and NEMA standards. Metering accuracy shall meet NEMA standard.
3. Control power transformers: Two-winding dry type with primary and secondary fuses, sized for the application per NFPA 70 (NEC) to supply power to the connected loads. Provide extra capacity as required or where shown on the Drawings.

H. Spare Parts:
1. Provide the following spare parts for each motor control center lineup:
   a. Two fuses of each size and type used.
   b. One auxiliary control relay with at least two normally open and two normally closed contacts.
   c. One control transformer of each size used.
   d. Twelve indicating lamps.
2. Spare parts shall be packed in sturdy containers with clear indelible identification markings and shall be stored in a dry, warm location until transferred to the OWNER. Deliver spare parts at the same time as the motor control centers. Comply with the requirements of the specifications.

I. Manufacturer's Nameplates and Identification:
1. Factory installed engraved manufacturer's nameplates, mounted on the face of the assembly, and shall be furnished for all main, tie and feeder breakers. These nameplates shall be laminated plastic with 3/4-inch minimum white characters on a black background or match existing, secured with stainless steel screws. These nameplates shall also contain item designation, equipment breaker frame size and breaker trip rating.

2. Wiring identification: provide heat shrinkable wire markers at each termination point, marked with identification corresponding to appropriate designations on manufacturer's wiring diagrams, color coding per NEMA standards and the NEC. Foreign voltage control wiring shall be yellow.
3. All control components within the assembly shall be identified in correspondence to appropriate designations on the manufacturer's wiring diagrams.

2.9 MCC MODIFICATIONS

A. Rating
1. Component short circuit ratings shall be not be less than minimum rated device in the motor control center. The overall short circuit rating of the existing motor control center shall be maintained. Components shall be rated 600 volts.
2. The integrity of series rated devices shall be maintained. Series combinations shall be UL listed
3. Motor starter units shall be tested and UL labeled for the specified short circuit duty in combination with the motor branch circuit protective device.
4. New devices installed in existing motor control centers shall be designed for continuous operation at rated current in a 40 degree C ambient temperature. Follow the manufacturer's recommended clearances and ventilation practices to prevent overheating and to maintain UL listing.

B. CONSTRUCTION
1. Enclosure
   a. Provide new sheet metal cubicles and doors to match existing equipment enclosure as required. New cubicles shall be supplied by the original equipment manufacturer where possible. Where existing units are obsolete, new cubicles may be supplied by a third-party vendor.
   b. Provide individual, flange formed, pan type door with concealed hinges and quarter turn latches for each device compartment as required. Doors shall be removable. Door removal shall not be required to withdraw starter units or feeder tap devices.
2. Unit Compartments
   a. Provide individual compartments for each removable combination starter and feeder tap device unit. Steel barriers shall isolate the top, bottom and sides of each compartment from adjacent units and wireways. Removable units shall connect to the vertical bus in each section with tin plated, self-aligning, pressure type copper plug connectors. Size 5 and larger starter units may be wired directly to the bus. Removable units shall be aligned in the structure on guide rails or shelves and secured with a cam latch mechanism or racking screw.
   b. Provide individual, isolated compartments for fixed mounted devices such as circuit breakers, cable lugs, metering, relaying and control devices. Main and bus tie circuit breakers shall be wired directly to the main horizontal bus. All bus connections shall be fully rated.
3. Compartments containing motor starters shall have wiring diagrams and heater tables fastened to the compartment door. Compartments containing panelboards shall have circuit directories fastened to the compartment door

2.10 PRODUCT AND MANUFACTURER: PROVIDE ONE OF THE FOLLOWING:

A. Square D

B. Siemens

C. General Electric

D. Eaton

E. Or engineer approved equal

PART 3 - EXECUTION

3.1 INSTALLATION

A. Install on raised concrete base at locations shown on the Drawings. Install support channels in concrete in accordance with the manufacturer's recommendations and instructions.

B. For installations against masonry walls, provide an insulation board, 1/4-inch minimum thickness, between motor control center and wall for corrosion protection. Trim board neatly within outline of unit.

C. Provide no openings in top or side of units not required for conduit.

D. Cable circuits together within enclosures and identify with durable tag secured to cabling twine.

E. Set motor circuit protectors at lowest setting possible which permits motor starting without nuisance tripping.

F. Field test all motor control center components.

G. Verify that wiring diagrams on inside of door of each compartment reflects the "as-built" circuitry and that the correct overload heater size and motor circuit protector setting are noted.

H. Furnish new manufacturer’s nameplates on all new motor control centers.

3.2 FIELD TESTING

A. Perform physical, electrical, and mechanical inspections in accordance with the manufacturer's recommendations and the following. Provide all temporary power for testing.
   1. Compare motor nameplate data with approved shop drawings. Ensure that overload relays or heater elements are installed and selected for the full load current shown on the nameplate of each motor and the manufacturer's instructions.
   2. Confirm correct application of manufacturer's recommended lubricants.
   3. Verify appropriate anchorage, required area clearances, and correct alignment.
   4. Inspect all doors, panels, and sections for paint, dents, scratches, fit, and missing hardware.
   5. Verify that fuse, circuit breaker, and starter sizes and types correspond to approved shop drawings.
   6. Verify that current transformer ratios correspond to approved shop drawings.
   7. Confirm correct operation and sequencing of electrical and mechanical interlock systems.

8. Inspect insulating materials and structure for evidence of physical damage, reduced clearances, or contaminated surfaces.
9. Check the integrity of all bus mounting means.
10. Verify that field wiring is adequately separated from live busses. Physically secure the field wiring to withstand the effects of fault currents.
11. Check all devices for damage and make all necessary repairs or replacements, prior to energizing.
12. Verify correct barrier and shutter installation and operation.
13. Exercise all active components.
14. Inspect all mechanical indicating devices for correct operation.
15. Verify that vents are clear.
16. Test operation, alignment, and penetration of disconnecting contacts.
17. Inspect control power transformers.
18. Verify all ground connections have been made.
19. Verify operation of space heaters.

B. Perform the following electrical acceptance tests on the motor control center in accordance with NETA ATS.
   1. Conduct an electrical insulation resistance test to verify that the equipment and field wiring are free from short circuits and grounds. Test phase-to-ground, phase-to-phase, and phase-to-neutral, with the switches or circuit breakers opened.
   2. Insulation-resistance test on control wiring; do not perform this test on wiring connected to solid-state components.
   3. Control wiring performance test.
   4. Phasing check on double-ended motor control center to ensure correct bus phasing from each source.
   5. Conduct earth resistance ground testing.

C. Perform the following electrical acceptance tests on insulated case and molded case circuit breakers with solid state trips in accordance with NETA ATS.
   1. Contact resistance tests.
   2. Insulation resistance tests.
   3. Long-time delay time-current characteristic tests.
   4. Determine short-time pickup and delay by primary current injection.
   5. Determine ground-fault pickup and time delay by primary current injection.
   6. Determine instantaneous pickup current by primary injection.
   7. Verify correct operation of any auxiliary features such as trip and pickup indicators, zone interlocking, electrical close and trip operation, trip-free, and anti-pump function.

D. Perform the following before energizing the equipment in accordance with NEMA ICS-2.3:
   1. Retighten all accessible electrical connections to the manufacturer's torque values.
   2. Retighten the wire clamping members of all accessible mechanical (pressure wire) type connectors to the values specified by the manufacturer.
   3. Retighten conical spring washers according to manufacturer's instructions.
   4. Turn all circuit breakers and fusible switches to the OFF position before energizing the bus.
   5. Adjust ground fault and instantaneous protective devices to their most sensitive settings during startup. Reset the devices after startup is complete and the equipment has been successfully energized.
   6. Reinstall all parts and barriers removed to facilitate wiring and installation.

7. Before closing the enclosure, remove all metal chips, scrap wire, and other debris from the motor control center interior. Remove accumulated dust and dirt by using a brush, vacuum cleaner or clean, lint-free rags.
8. Install covers, close doors, and make certain that no wires are pinched and that all enclosure parts are properly aligned and tightened.

E. Performance Test
1. Verify complete system operation including all hardware, software and communication devices.
2. Verify networking performance with all interfacing systems by other manufacturers.

3.3 ADJUSTMENT

A. The CONTRACTOR shall perform field adjustments of the protective devices as required to place the equipment in final operating condition. The settings shall be in accordance with the approved short circuit and protective device coordination study.

B. The manufacturer's representative shall provide the following services for starting up and programming of the power management system and metering devices:
1. Set all the adjustable or programmable parameters of all devices in the equipment.
2. Coordinate startup with other manufacturers' equipment.
3. Verify the integrity of the data communications network and troubleshoot as necessary.
4. Set all the network addresses of all devices in the equipment.
5. Map the Modbus RTU read registers in the field devices to communicate with power management software.

3.4 MANUFACTURER'S SERVICES

A. A factory trained representative shall be provided for installation supervision, start-up and test services and operation and maintenance personnel training services. The representative shall make a minimum of 3 visits, minimum 8 hours on-site for each visit, to the site. The first visit shall be for assistance in the installation of equipment. The second visit shall be for checking the completed installation and start-up of the system. The third visit shall be for training. Manufacturer's representative shall test operate the system in the presence of the ENGINEER and verify that the motor control centers conform to requirements. Representative shall revisit the job site as often as necessary until all trouble is corrected and the installation is entirely satisfactory.

B. All costs, including travel, lodging, meals and incidentals, shall be considered as included in CONTRACTOR'S bid price.

++ END OF SECTION ++

This page intentionally left blank

DOCUMENTS FOR THE JET AERATION PROCUREMENT

CITY OF SURPRISE

WATER RESOURCE MANAGEMENT DEPARTMENT
SPA1 WRF CAPACITY EXPANSION FACILITY RERATING

WWE PROJECT 20-018

TECHNICAL SPECIFICATIONS

SEPTEMBER 2022

JET AERATION PROCUREMENT SET

SURPRISE
ARIZONA

ENGINEER:

WATERWORKS ENGINEERS

WATER WORKS ENGINEERS, LLC.
SCOTTSDALE, AZ

THIS PAGE INTENTIONALLY LEFT BLANK

TABLE OF CONTENTS

SECTION	TITLE
DIVISION 11	
11300	SUBMERSIBLE SEWAGE PUMPS
11630	JET AERATION EQUIPMENT
DIVISION 15	
15101	BUTTERFLY VALVES
15106	VALVE ACTUATORS

THIS PAGE INTENTIONALLY LEFT BLANK

SECTION 11300

SUBMERSIBLE SEWAGE PUMPS

PART 1 - GENERAL

1.1 EQUIPMENT TAG NUMBERS

A. This specification section refers to the Jet Aeration Pumps

- JAP-ODN4-411
- JAP-ODN4-412
- JAP-ODN4-413
- JAP-ODN4-414
- JAP-ODN4-415
- JAP-ODS4-421
- JAP-ODS4-422
- JAP-ODS4-423
- JAP-ODS4-424
- JAP-ODS4-425
- JAP-ODN5-511
- JAP-ODN5-512
- JAP-ODN5-513
- JAP-ODN5-514
- JAP-ODN5-515
- JAP-ODN5-521
- JAP-ODN5-522
- JAP-ODN5-523
- JAP-ODN5-524
- JAP-ODN5-525

B. Submersible pumps to be supplied and coordinated with Section 11630, Jet Aeration Equipment.

1.2 SUBMITTALS

A. Product Data:
1. Make, model, weight, and horsepower of each equipment assembly.
2. Complete catalog information, descriptive literature, specifications, and identification of materials of construction.
3. Dimensional outline and installation drawing. Full installation instructions.
4. Performance data curves showing head, capacity, horsepower demand, pump efficiency, and net positive suction head required over the entire operating range of the pump, from shutoff to maximum capacity. Indicate separately the head, capacity, horsepower demand, overall efficiency, and minimum submergence required at the guarantee point.
5. Power and control wiring diagrams, including terminals and numbers.
6. Data on the moisture/temperature protective relay
7. Complete motor nameplate data, as defined by NEMA, motor manufacturer, and including any motor modifications.
8. Factory finish system.
9. Complete catalog information for the davit crane, including make, model, lifting capacity, materials of construction, and installation drawing with dimensions.

B. Motor Tests and Data:
1. For each motor furnish an inspection report for the motor or for a previously manufactured electrically duplicate motor that has been tested. Provide the following minimum data:
   a. Running current.
   b. Locked rotor current.
   c. Winding resistance measurement.
   d. High potential test.
   e. Bearing inspection.

C. Operation and Maintenance Manuals: Submit complete manuals including: copies of all approved Shop Drawings, test reports, maintenance data and schedules, description of operation, and spare parts information.

D. Guarantee: Submit Guarantee.

E. Test Data: Pumps shall not be shipped until the ENGINEER has approved the test reports. Submit:
   1. Four copies of certified pump tests.

1.3 QUALITY ASSURANCE

A. To assure unity of responsibility, the pumps, motors, and supporting bases shall be furnished by or approved by the jet aeration equipment manufacturer. The jet aeration equipment manufacturer shall assume responsibility for the satisfactory operation of the entire pumping system including submersible pumps and motors.

PART 2 - PRODUCTS

2.1 PRODUCTS

A. Pump equipment shall consist of pump(s) complete with motor(s), guide rails and supports, base elbow(s), anchoring brackets, power cable(s), pump lifting cable(s), and protective control system. Pump metal parts that come into contact with guide rail or cable system shall be made of non-sparking materials.

B. The pump shall be cast from ASTM A48 Cast Iron construction with Duplex stainless-steel impeller.

C. Pumps and Motors:
   1. Jet Aeration Pumps:
      a. Flow/Head: 7,400 gpm to 9,600 gpm
      b. Head: 19 feet to 22 feet of Total Dynamic Head
      c. Horsepower: 75 HP (max)
      d. Voltage: 480V, 3 Phase, 60 Hertz
      e. 8-pole, 900 RPM

D. Pump Features:
   1. Service: Raw Sewage
   2. Type: Non-clog centrifugal submersible sewage pump
   3. Capacity: Passing 2” ball, minimum
   4. Volute: ASTM A48 CL35B Cast Iron
   5. Impeller: ASTM A48 CL35B Cast Iron

E. Accessories:
   1. Base Elbow: ASTM A48, CL35B Cast Iron, one per pump
   2. Guide Rails: Type 316 Stainless Steel, coordinate length with drawings, 2-inch diameter, two per pump
   3. Upper Guide Rail Brackets (one per pump):
      a. Type 316 Stainless Steel
      b. Mount to concrete structure or fabricated steel support.
   4. Intermediate Guide Rail Brackets (one per pump):
      a. Type 316 Stainless Steel
      b. Provide if guide rails are longer than 20-feet
      c. Brackets shall mount to discharge piping

5. Pump Lift System:
    a. Furnish accessories necessary for lifting the pump and motor from the wetwell. The working load of the lifting system shall be a minimum of 50% greater than the pump unit's weight.
    b. Lifting Chain: approximately 18" long 316 Stainless Steel, provide one chain per pump
    c. 30 feet of nylon line connected to the lifting chain
    d. Forged steel grip eye for connecting/disconnecting davit crane hook and cable to pump chain.
6. Safety Hooks and Cable Holders: 316 Stainless Steel, provide one of each per pump

F. Motors:
1. Connected load shall not exceed 90 percent of motor nameplate horsepower
2. Motor shall be non-overloading for the entire pump operating curve.
3. Furnish motors suited for operation in a Class 1, Division 1, Group D explosion-proof atmosphere and certified as such by Factory Mutual.
4. Vertical mounting
5. Solid shaft
    a. Shaft seal: Tandem mechanical seals
6. Service factor: 1.15
7. Thermal Protection: Normally closed thermal switch in stator housing
8. Moisture Protection: Leakage Sensor in stator housing
9. Motor capable of 15 starts per hour
10. Motor capable of continuous full-load operation while unsubmerged without overheating or voiding Class 1, Division 1, Group D compliance
11. Class F insulation
12. Provide motor lifting lug
13. Provide motor power and control cables with connections made at the motor inside a junction chamber. Cable entry shall be sealed and provided with means of strain relief. Cables shall comply with applicable code requirements. Coordinate pump cable length with distance between pump and control panel, per drawings and field installation.

G. Controls:
1. Provide moisture protection/thermal protection relay for connection to leakage sensor and thermal switch on each motor for installation in an external control panel by others.
2. Provide pump control panel with the following features:
    a. NEMA 3R enclosure with locking handle
    b. Label with black phenolic label with white engraved lettering, 1-inch high "JET AERATION PUMP CONTROL PANEL"
    c. Interior light with switch
    d. False front panel inside
        1) Power disconnect inside enclosure, mounted to false front
        2) Pump run indicator lights (RED) mounted to false front, push to test
        3) Panel power indicator light (WHITE) mounted to false front, push to test
        4) Pump fail indicator lights (AMBER) mounted to false front, push to test
        5) Pump seal indicator lights (AMBER) mounted to false front, push to test
        6) Pump motor over temperature indicator lights (AMBER) mounted to false front, push to test
        7) Pump LOCAL/OFF/REMOTE switch for each pump, mounted to false front
        8) Pump START pushbutton

9) Pump STOP pushbutton
10) Alarm RESET pushbutton
11) Pump run time

e. Single power feed at pump motor voltage indicated above
f. Motor combination starters, sized for motor horsepower indicated above
g. Local beacon and siren
h. Control transformer to provide control voltage (24 or 120 volt)

3. Control Description:
   a. When pumps are in "REMOTE" position:
      1) Pump 'START' on command from SCADA
      2) Pump 'STOP' on command from SCADA
      3) Pump 'RESET' on command from SCADA
   b. When Pumps are in "LOCAL" position:
      1) Pump 'START' on pushbutton
      2) Pump 'STOP' on pushbutton
      3) Pump 'RESET' on pushbutton
   c. Pump interlock and alarm on motor overheat (thermal switch) or moisture leakage (leakage sensor)
   d. Local beacon and siren
      1) Activate beacon and siren on alarm
   e. Remote alarms
      1) Make the following alarms available for pick-up at a terminal strip in the control panel:
         a) Pump trouble for each pump (indicating motor overheat or moisture leakage)
         b) Pump run status for each pump
         c) Panel power status
   f. Remote indicators
      1) REMOTE status
      2) RUN status
      3) ALARM status

H. Manufacturers/Models:
   1. Flygt Model NP3301 with 816 impeller

I. Spare Parts:
   1. Provide the following spare parts for each pump:
      a. One complete set of upper and lower bearings
      b. One complete set of seals, gaskets and O-rings
   2. Special tools required for normal operation and maintenance of the equipment shall be furnished with the equipment by the manufacturer.

PART 3 - EXECUTION

3.1 INSTALLATION

A. Installation shall be in complete accordance with manufacturer's instructions.

B. Installation shall include furnishing and applying an initial supply of grease and oil, recommended by manufacturer.

C. Check and align all pumps, motors, etc. after pump assemblies have been installed to ensure alignment and assembly has been unchanged from factory assembly conditions. Make adjustments required to place system in proper operating condition. Pump installation shall place no strain on adjacent piping systems.

3.2 FIELD QUALITY CONTROL

A. Functional Test: Conduct on each pump.
   1. Alignment: Test complete assemblies for correct rotation, proper alignment and connection, and quiet operation.

3.3 MANUFACTURER'S FIELD SERVICES

A. A factory trained representative shall be provided for start-up and test services and operation and maintenance personnel training services. The representative shall make two one-day visits to the site for performing these services.

+ + END OF SECTION + +

SECTION 11630

JET AERATION EQUIPMENT

PART 1 - GENERAL

1.1 DESCRIPTION

A. Jet aeration system equipment manufacturer shall furnish materials, equipment, appurtenances, and incidentals as shown, specified and required to provide, test, and place into satisfactory operation the jet aeration equipment. Equipment installation will be by others.

B. The jet type aeration system shall be designed to provide required aeration and mixing of continuously-fed, continuously aerated concrete tank membrane bioreactors.

C. The equipment shall consist of the following: bi-directional jet aeration headers, submersible centrifugal pumps, in-basin liquid and air piping along with necessary supports and hardware, where required, as described hereinafter. Jet aeration system will connect into a process air supply system connections provided by others and located at the bioreactors.

D. All equipment specified under this section shall be furnished by a single system manufacturer who shall be responsible for the completeness, performance, adequacy and proper operation of the system in accordance with the requirements herein and as directed by the Design Builder.

E. Jet Aeration Header Recirculation Submersible Pumps, see Specification 11300, Submersible Sewage Pumps.

1.2 SUBMITTALS REQUIRED

A. Submit the following project data for each pump group specified herein:
   1. Type designation and descriptive literature.
   2. Detailed layout of aeration equipment and accessories. Details and dimensions of jet aeration assemblies, including manifold and distribution piping supports and joints.
   3. Recirculation Pump HP requirements.
   4. Jet Aeration head loss data for coordination with Process Air Blower system sizing confirmation.
   5. Oxygen transfer efficiency curve(s) of the proposed system for a representative layout section at different air flux rates in the design range.
   6. Seller's certified calculations and data showing location of critical speeds in relation to jet aeration pump operating speeds.
   7. Submit SOR, AOR and SOTE by zone design criteria by zone.

1.3 WARRANTY

A. Jet aeration equipment manufacturer shall guarantee all materials and system components for a period of 1 year following OWNER final acceptance of the equipment.

All costs for replacement of all failed or defective parts, including cost for shipping to the job site, shall be borne by the jet aeration equipment manufacturer.

1.4 QUALITY ASSURANCE

A. All the equipment specified under this section shall be furnished by a single manufacturer with a minimum of 10 years' experience. Manufacturer shall be fully experienced, reputable and qualified in the manufacture of the equipment to be furnished. If requested, the manufacturer shall submit evidence of having supplied at least five successful installations with equal capacity or larger in the United States within the past 10 years.

B. In the event that it is impossible to conform with certain details of these specifications due to different manufacturing techniques, describe completely all non-conforming aspects.

C. All materials and equipment which will become a part of the installed work shall be new and unused.

D. To assure unity of responsibility, the pumps, motors, and supporting bases shall be furnished by or approved by the jet aeration equipment manufacturer. The jet aeration equipment manufacturer shall assume responsibility for the satisfactory operation of the entire pumping system including submersible pumps and motors.

PART 2 - PRODUCTS

2.1 SYSTEM PERFORMANCE/LAYOUT AND DESIGN CRITERIA

A. General: The proposed jet aeration system shall be designed to provide the following calculated maximum AORs to accommodate an average day maximum month (ADMM) design load condition with 5.75 mgd design flow each for Plants IV and Plant V. Actual air requirements may be distributed through both plants. The jet aeration equipment manufacturer shall be responsible for determining jet aeration header diameter and appropriate nozzle geometry.

B. Design Criteria:

Oxidation Ditch Materials of Construction	Reinforced Concrete
Overall Oxidation Ditch Dimensions	315 ft long by 72 ft wide
Number of Oxidation Ditches	Plant IV – 2 ea Plant V – 2 ea
Maximum Liquid Level in Oxidation Ditch	11.5 feet
Oxidation Ditch Design Water Temperature	25 degrees Celsius
Oxidation Ditch Volume Capacity	1.95 million gallons (MG)
Alpha factor	0.75
Beta factor	0.98

Fouling Factor, F	0.95
Preferred Number of Jet Aeration Headers per Oxidation Ditch	5 Each
Aerator type	Bi-directional
Number of Nozzles per Aerator	To be provided by Jet Aeration Equipment Manufacturer
Open Nozzles solids handling capacity	2.0-inch round solids
Slot Nozzle solids handling capacity	5/8 inch round solids
Jet Aeration construction	316 / 304 Stainless Steel
Pumps per Oxidation Ditch	5 each
Pump type	Submersible Centrifugal Pumps
Pump Flow	7,400 to 9,600 gpm
Maximum Pump RPM	Jet Aeration Equipment Manufacturer to Confirm
Minimum Pump efficiency required	50%
Liquid discharge header size at bioreactor inlet	Jet Aeration Equipment Manufacturer to Confirm
Air discharge header size at bioreactor inlet	Jet Aeration Equipment Manufacturer to Confirm
Maximum Motor HP per pump	75 HP

C. AOR Design Criteria

	Volume, MG	**Peak Field Oxygen Uptake Rate (mg / L / hr)**	**Dissolved Oxygen (Concentration mg/L)**
Zone 1	0.16	N/A	N/A
Zone 2	0.65	57.8	2.0
Zone 3	0.32	37.1	2.0
Zone 4	0.65	29.9	2.0
Zone 5	0.16	28.6	2.0

2.2 MANUFACTURERS

A. The equipment specified herein is based upon equipment provided by the following acceptable manufacturers:
   1. Evoqua Water Technologies, Waukesha, WI – Vari-Cant Jet Aeration System
   2. Veolia Water Technologies, Inc., NC – Krueger Jet Aeration System
   3. Or approved equal

2.3 BIDIRECTIONAL MIX JET AERATORS

A. Each Bidirectional Mix Jet Aerator header shall be comprised of integrally fabricated air and liquid headers equipped with multiple air/liquid jet nozzles. The jet nozzles shall be mounted on both sides of the liquid header, directed one way for half the run, equally spaced along the length of the manifold.

B. Recirculated liquid shall enter the liquid header through a flanged connection and low-pressure air shall enter the air header through another flanged connection.

C. The aerator shall be designed to provide uniform distribution of the liquid phase and air phase to each jet nozzle. The recirculated liquid and low-pressure air shall be combined in the jet nozzle and the resultant fine bubble stream shall be discharged horizontally as a high energy jet in the lower regions of the basin.

D. The liquid header shall be a cylindrical member which shall be internally smooth and must be free from protrusions which might collect stringy material. The jet nozzles shall be aligned on a common horizontal plane. The air header shall also be a cylindrical memberlocated above and parallel to the liquid header.

E. The air header shall be attached to and supported above the liquid header by the air feed at each jet nozzle location. Individual feeds shall ensure uniform air distribution to each jet. Additional air header supports shall be provided as necessary.

F. The liquid and air headers shall be fabricated of corrosion resistant, structurally sound, filament wound, fiberglass reinforced thermosetting resin pipe conforming to ANSI/ASTM specification D-2996-81. The air feed for each jet nozzle shall be fabricated from structurally sound fiberglass reinforced plastic and shall be molded to the air and liquid headers in accordance with NBS specifications PS-15-69.

G. Each conical jet nozzle or slot injector nozzle shall consist of an inner liquid nozzle and outer air/liquid discharge nozzle fabricated from fiberglass reinforced plastic in accordance with NBS specifications PS-15-69. The jet nozzles shall be constructed using Hetron 922. No other type of material or resin shall be allowed.

H. The wall thickness of liquid and air headers shall be as follows:

DIAMETER	***WALL THICKNESS, INCHES (100 PSI)***
8-inch I.D.	0.21
12-inch I.D.	0.26
16-inch I.D.	0.31
20-inch I.D.	0.36
Nozzles	0.38
Air saddles	0.26

I. The jets shall be molded and assembled to be concentric with the inner liquid and outer air/liquid discharge nozzle in axial alignment. The air/liquid discharge nozzles shall be of constantly decreasing cross-sectional area so as to increase the velocity of the air/liquid mixture originating from the liquid nozzle and the air chamber.

J. The jet nozzles shall have minimum 3/8-inch wall thickness with a 10 to 20-mil silicon carbide barrier on the interior of the nozzles for abrasion resistance.

K. The outlets of both the inner and outer nozzles for conical nozzles shall be circular and shall be capable of passing a 2.2-inch spherical solid and must be free from all protrusions which may collectstringy material. Slot injector nozzles are also acceptable and shall be capable of passing 5/8 inch spherical solids and must be free from all protrusions which may collect stringy material.

L. The air/liquid secondary discharge nozzle shall have a circular orifice outlet having a diameter of from 1.7 to 1.9 times the liquid nozzle outlet diameter. The diameter of the secondary nozzle shall increase in the direction of the inner liquid nozzle with an included angle which shall be greater than 10 degrees and less than 30 degrees for at least 6- inches along the horizontal flow path of the secondary nozzle.

2.4 DISTRIBUTION PIPING

A. All air and liquid distribution piping within the basin shall be provided as part of the jet aeration equipment.

B. All pipe and fittings shall be constructed of structurally sound fiberglass reinforced plasticconforming to ANSI/ASTM specifications D-2996-81.

C. All piping shall be constructed to withstand a working pressure of 100 PSI.

D. Flanged connections shall be provided for connecting the jet system to the out-of-basin aeration piping (by others).

E. Gaskets and Type 18-8 stainless steel connection hardware shall be supplied for all connections including Seller/contractor interface inside the tank wall.

F. Piping shall be assembled in the field by the installation contractor. Installation hardware and FRP field wraps are to be supplied by the installation contractor.

2.5 SUPPORTS

A. All necessary supports for the jet aeration manifold, in-basin air and liquid piping shall beprovided by Seller.

B. All pipe supports shall be constructed of Type 304 stainless steel.

C. All pipe supports shall consist of a contoured saddle welded to a supporting base. The support base shall be anchored to the tank floor with anchor bolts and grouted in place asnecessary. No other type of supports shall be accepted.

D. A contoured clamp shall hold the piping to the saddle using bolted connections. The saddle and clamp shall be provided with Neoprene rubber pads to prevent abrasion. Type 18-8 stainless steel connection hardware of sufficient size shall be provided.

E. Anchor bolts and grouting shall be supplied by installation contractor.

F. All in-tank piping, supports, accessories and hardware shall be designed to support with no movement the following loads:
   1. Gravity Loads: All downward vertical loads including the weight of the pipe and appurtenant attachments together with the weight of water required to fill the pipe. Gravity loads shall be based on the tank being empty and the pipe being full.
   2. Buoyant Loads: The load which acts vertically upward, and which is equal in magnitude to the weight of the water displaced by the pipe. The line of action of this force shall be considered to pass through the centroid of the submerged cross-sectional area of the pipe. Buoyant loads shall be based on the tank being full and thepipe being empty.
   3. Seismic Loads – Per Local Requirements and Building Codes.

2.6 JET AERATION HEADER RECIRCULATION PUMPS

A. Submersible centrifugal pumps shall be supplied by the jet aeration system manufacturer for installation at a bioreactor to provide hydraulic water circulation flows through the jet aeration headers. No other type of pumps shall be acceptable. Pump and components shall be suitable for exposure to the mixed liquor in the bioreactors.

B. Mixing pumps shall be designed to pump a minimum of flow at the required TDH as specified by the jet aeration equipment manufacturer. Final TDH calculations shall be completed by the manufacturer based on the conceptual piping arrangements provided by the jet aeration equipment manufacturer.

C. See Section 11300, Submersible Sewage Pumps.

2.7 PROCESS AIR BLOWERS

A. Blowers are provided by others in this project.

2.8 ACCESSORIES

A. Modulating Butterfly Valves, Type 2, see Section 15101, Butterfly Valves

B. Air Flow Control Valves, Type 6, See Section 15106, Valve Actuators

PART 3 - EXECUTION

3.1 INSTALLATION, FIELD SERVICE AND STARTUP

A. Jet aeration equipment provided by the jet aeration equipment manufacturer shall be installed by others.

B. Jet Aeration System installation inspection, start-up service and operator instruction shallbe provided by a qualified jet aeration equipment manufacturer factory engineer in one trip. The trip shall be of two man-days at the jobsite.

C. Operator training and start up service shall also be provided at time of system start up.

++ END OF SECTION ++

THIS PAGE INTENTIONALLY LEFT BLANK

SECTION 15101

BUTTERFLY VALVES

PART 1 - GENERAL

1.1 DESCRIPTION

A. Description of Work:
   1. SYSTEM SUPPLIER shall provide all valves as shown on the Drawings, specified and required.

B. Related Work Specified Elsewhere:
   1. Division 1, General Requirements
   2. Section 11629, Single Stage Centrifugal Blower System
   3. Section 11630, Jet Aeration Equipment

1.2 QUALITY ASSURANCE

A. Manufacturer Qualifications: Manufacturer(s) of the valves furnished under this Section shall have experience in providing similar type of valves and shall show evidence with his submittal of at least five (5) installations where the valves of the same material and same application of the type specified herein have been in satisfactory operation for at least five (5) years. All valves of the same type shall each be the product of one manufacturer.

B. Reference Standards:
   1. Standards of American Water Works Association, AWWA
   2. Standards of American Society for Testing and Materials, ASTM
   3. Standards of American National Standards Institute, ANSI
   4. Standards of American Iron and Steel Institute, AISI
   5. Standards of National Electrical Manufacturer's Association, NEMA
   6. National Sanitation Foundation, NSF

C. Design Criteria:
   1. The SYSTEM SUPPLIER shall submit for approval the materials to meet the design conditions. Materials of all piping, valves, and appurtenances shall be compatible with the intended use and service.

1.3 SUBMITTALS

A. Submit for approval with shop drawings required under Section 11629, Single Stage Centrifugal Blower System and Section 11630, Jet Aeration Equipment:
   1. Submit detailed drawings and data for valves.
   2. For electric and pneumatically actuated valves, prepare and submit a table of the torque requirements for the valve and the corresponding valve actuator to demonstrate that the valve actuator as been properly sized and will satisfy the minimum torque requirements.

B. Certificates: Submit Certificates of Compliance with applicable referenced standards.

C. Technical Manuals: Complete operation and maintenance instruction, lubrication schedules and troubleshooting guides shall be submitted for review in accordance with the procedures and requirements set forth in Section 01730, Installation, Operation and Maintenance Manuals; Section 01731, Training of Operations and Maintenance Personnel, and as specified in Divisions 13, Special Construction and 16, Electrical.

D. For all tagged devices supplied, the SYSTEM SUPPLIER shall develop an "Equipment Cross Reference Schedule" that matches the Tag to the appropriate equipment manual. The equipment schedule shall include the pertinent information associated with the equipment including tag number, description, functional name location, component equipment model, part number, size, materials, accessories and range. The equipment cross-reference schedule shall be provided in the form of a Microsoft Excel (.XLS) Spreadsheet.

1.4 PRODUCTION, DELIVERY, STORAGE, AND HANDLING

A. Delivery, Storage and Handling of Materials: All materials shall be delivered to the site, stored, and handled in accordance with the manufacturer's instructions. SYSTEM SUPPLIER shall inspect shipments for damage and content well in advance of the date scheduled for incorporation in the Work. Refer to Sections 01610, Transportation and Handling of Goods and 01611, Protection of Goods for additional requirements.

B. Prior to Shipment:
   1. Each valve shall be plainly marked.

C. Prior to shipment, all valves shall be thoroughly cleaned of sand, scale, rust or other foreign substances. Open ends of valves shall be suitably closed to prevent the entrance of foreign matter after cleaning and during shipment and storage.

PART 2 - PRODUCTS

2.1 PROCESS SYSTEM DESIGN AND PERFORMANCE - NOT USED

2.2 EQUIPMENT DESIGN AND FABRICATION

A. General
   1. All valves shall have manufacturer's name and working pressure cast in raised lettering on valve body.
   2. All manual valve operators shall open counter-clockwise.
   3. All bolts, nuts and studs on valves shall be of Type 304 stainless steel.
   4. Bolts and nuts shall have hexagon heads.
   5. Gasket material and installation shall conform to valve manufacturer's recommendations.

6. Unless otherwise shown or otherwise specified, all flanged valves shall have ends conforming to ANSI Class 125/150 flange.
7. Valve Tags: Each type of valve shall be provided with a tag as indicated in the Equipment Cross Reference Schedule. Tags shall be mounted to valve attachments.
8. Valve shall be capable of being installed with valve disc in the closed or any intermediate position without leading to valve or seat failure.
9. Not all valves listed herein may be required under this Contract. Refer to the Drawings for valve numbers and locations. Valves shall be of the type specified herein and as shown on the Drawings. All valves of the same type shall be of the same make. Valves shall be in-line size except as shown otherwise on the Drawings or otherwise specified. Ratings specified are minimum, and are water working pressure unless noted otherwise or otherwise specified.
10. Seats and Seals Unless otherwise specified, provide valves with the following seats and seals.
    a. Water Service – EPDM
    b. Compressed Air – Teflon - PTFE
    c. Process Air – Fluorocarbon (Viton, RTFE, or Fluorinated Hydrocarbon Elastomer ASTM D1418) rated for 350 degrees minimum or higher if required by process.
11. All interior ferrous iron surfaces of butterfly valves shall be thoroughly cleaned by sand blasting to assure proper bonding and coated with a chemical resistant elastomeric coating.

2.3 EQUIPMENT AND COMPONENTS

A. Type 1 Butterfly Valve (BFV-1)
   1. Service Conditions: General Service - less than 30 inches in diameter:
      a. One Piece Body
         1) Unless otherwise specified or approved by the Engineer, all valves shall be lugged style.
            a) Body: 1 piece cast iron or ductile iron body
            b) Disc: 316 stainless steel disc
            c) Stem: 316 or 416 Stainless Steel
            d) Bushings: PTFE
            e) Pins: Stainless Steel
            f) Seats and Seals:
               1. Water Service – EPDM
               2. Compressed Air – Teflon - PTFE
               3. Process Air – Fluorocarbon (Viton, RTFE, or Fluorinated Hydrocarbon Elastomer ASTM D1418) rated for 350 degrees minimum or higher if required by process.
         2) All valves shall be furnished with two upper and one lower bearings/bushings of PTFE material. Shaft seals shall be provided to prevent leakage and to protect bearings from internal or external corrosion.
         3) Valve seats shall be of the reinforced resilient type and shall be field replaceable. Seats shall also act as a body liner to prevent flow from

contacting the body casting. Seats shall have flange sealing to provide a positive seal without use of flange gaskets.

4) Valves shall be rated for a minimum of 150 psi bi-directional- "dead end" or 175 psi with directional (with the disc) / 100 psi (against the disc) "dead end" bubble tight shut-off capability without the use of backing flanges. Valves to be suitable for and rated for full vacuum service.
5) Body wall shall exceed requirement for AWWA C504 Class 150 standard.
6) The disc shall be secured to the shaft using at least 2 Type 316 stainless steel pins or self-locking setscrews.
7) Valves shall have the ability to be installed with the disc in the closed position.
8) Valves shall be suitable for process air or vacuum service.
9) Factory Testing: Test shall be conducted on each valve in accordance with Manufacturer's Quality Control procedures.
10) Acceptable Manufacturers:
    a) DeZURIK – Type BRS

b. Two Piece Body
    1) Butterfly valves 2-inch to 12 inch shall be flange, lugged style, 150 psi class butterfly valves using a 2 piece cast iron body and 316 stainless steel paddle.
    2) Valve seats shall be of the reinforced resilient type and shall be field replaceable. Seats shall have flange sealing to provide a positive seal without use of flange gaskets.
    3) Shafts shall be 316 stainless steel. Shaft diameter shall be suitable for 150 psi service (2 to 12 inch valves).
    4) Discs shall be 316 stainless steel and use a thin profile disk. The disc-to-shaft connections shall be Type 316 stainless steel.
    5) Pins, shaft and disc of all valves shall be individually machined and completely interchangeable.
    6) Valves shall be compatible will the fluids in contact with the valve at a maximum temperature of 110 degrees F.
    7) Factory Testing: Test shall be conducted on each valve in accordance with Manufacturer's Quality Control procedures.
    8) Acceptable Manufacturers:
        a) Keystone - Resilient Seated Valve Type 920
        b) or-Equal will not be accepted (use 1 piece Body Valve)

B. Type 2 Butterfly Valve (BFV-2)
    1. Service Conditions: Automated – Modulating and Cyclic Service
        a. For valves that are in locations where reliability is a consideration, or for automated valves that automatically modulate for flow control or actuate with periodic backwashing or other SYSTEM SUPPLIER designated terminology describing the reversal of periodic flow through a system that occurs at design intervals of less than 2-hours, the SYSTEM SUPPLIER will provide automated valves that utilize an offset disc design and are classified as a "High Performance Butterfly Valve" with a soft seat.
        b. Valves shall provide ANSI class VI shutoff
        c. Materials of Construction

1) Body: 316 Stainless Steel
2) Disc: 316 Stainless Steel
3) Shaft: 17-4PH SS or 316 Stainless Steel
4) Pins: 316 Stainless Steel
5) Seats and Seals:
    a) Water Service – EPDM
    b) Compressed Air – Teflon - PTFE
    c) Process Air – Fluorocarbon (Viton or RTFE or Fluorinated Hydrocarbon Elastomer - ASTM D1418) rated for 300 degrees minimum or higher if required by process.
6) Backing Ring: Stainless Steel
7) Bushing / Bearings: EPDM or RTFE
8) Packing: PTFE

d. Throttling or rate of flow control valves may be of the butterfly type. The SYSTEM SUPPLIER shall submit calculations to verify that valve cavitation does not occur over the operating range of the valve.
e. Bolting Pattern - Lugged valves shall be used.
f. Acceptable manufacturers:
    1) DeZURIK - High Performance Butterfly Valve

C. Type 4 Butterfly Valve (BFV-4)
1. Service Conditions - General service isolation where a AWWA 504 Class 150B Valve is identified.
2. Unless otherwise specified, valves shall be mono-flange style.
3. Materials of Construction
    a. Body: Ductile Iron
    b. Disc: 316 Stainless Steel
    c. Shaft: 17-4PH SS or 316 Stainless Steel
    d. Pins: 316 Stainless Steel
    e. Seats and Seals:
        1) Water Service – EPDM
        2) Compressed Air – Teflon - PTFE
        3) Process Air – Fluorocarbon (Viton, RTFE, or Fluorinated Hydrocarbon Elastomer - ASTM D1418) rated for 300 degrees minimum or higher if required by process.
    f. Bushing / Bearings: Bronze, EPDM or RTFE
    g. Packing: PTFE
    h. O-ring: EPDM
4. Acceptable Manufacturer
    a. DeZURIK

D. Type 5 Butterfly Valve (Type BFV-5) – Not Used

E. Type 6 Butterfly Valve – (Type BFV-6) Manual Module Isolation Valve
1. Butterfly valves shall be wafer style, 150 psi butterfly valves using a 2 piece cast iron body and 316 stainless steel paddle.
2. Valve seats shall be of the reinforced resilient type and shall be field replaceable. Seats shall have flange sealing to provide a positive seal without use of flange gaskets. Seat shall be EPDM Food grade.

3. Shafts shall be 316 stainless steel. Shaft diameter shall be suitable for 150 psi service and suitable for full vacuum service
4. Discs shall be 316 stainless steel and use a thin profile disk. The disc-to-shaft connections shall be Type 316 stainless steel.
5. Pins, shaft and disc of all valves shall be individually machined and completely interchangeable.
6. Valves shall be compatible will the fluids in contact with the valve at a maximum temperature of 250 degrees F.
7. Limit switches are not required.
8. Factory Testing: Test shall be conducted on each valve in accordance with Manufacturer's Quality Control procedures.
9. Acceptable Manufacturers:
   a. Dezurik

PART 3 - EXECUTION

3.1 INSPECTION

A. The SYSTEM SUPPLIER shall inspect all valves prior to equipment fabrication to ensure that it is free of defects in material and workmanship.

3.2 INSTALLATION

A. All field installed valves outside of packaged mounted systems shall be installed by the Contractor.

B. Valves shall be installed in complete accordance with the valve manufacturer's instructions and recommendations.

C. Where supports are not shown, horizontal runs of piping shall be supplied with sufficient supports to maintain deflection of pipelines in a span at less than ¼-inch, when filled with water.

D. Piping shall not interfere with access to valves or equipment, or obstruct removal spaces required for maintenance of equipment.

E. A molybdenum disulfide anti-seize compound shall be applied to all threads in mechanical connections such as bolts, studs, screws, etc. unless otherwise noted.

F. Flanged Joint Installation
   1. Flanged joints shall be drawn together until the joint is perfectly tight. The length of bolts shall be uniform and they shall not project from the nut more than ¼-inch or fall short of the end of the nut when fully taken up. The ends of the bolts shall be cut off and neatly rounded. Threads on both nuts and bolts shall be sharply cut and accurately sized so as to turn freely without undue play. A 304 stainless steel flat washer shall be located on each side of the flange and a 304 stainless steel lock washer shall be installed between the flat washer and the nut. All bolts shall be inserted and all nuts screwed up

tightly by hand. Nuts spaced 180 degrees apart shall be tightened alternately in order to produce an equal pressure on all parts of the gasket.

+ + END OF SECTION + +

THIS PAGE INTENTIONALLY LEFT BLANK

SECTION 15106

VALVE ACTUATORS

PART 1 - GENERAL

1.1 DESCRIPTION

A. Description of Work:
   1. SYSTEM SUPPLIER shall provide all valve actuators as shown on the Drawings, specified and required.
   2. Modulating valves will use analog (4-20 mA) control.
   3. All automated valves that are controlled or monitored shall be provided with a positioner/controller for modulating valves and/or position monitor limit switches for on-off valves.

B. Related Work Specified Elsewhere:
   1. Division 1, General Requirements
   2. Section 11629, Single Stage Centrifugal Blower System
   3. Section 11630, Jet Aeration Equipment

1.2 QUALITY ASSURANCE

A. Manufacturer Qualifications: Manufacturer(s) of the valve actuators furnished under this Section shall have experience in providing similar type of valve actuators and shall show evidence with his submittal of at least five (5) installations where the valve actuators of the same material and same application of the type specified herein have been in satisfactory operation for at least five (5) years. All valve actuators of the same type shall each be the product of one manufacturer.

B. Reference Standards:
   1. Standards of American Water Works Association, AWWA
   2. Standards of American Society for Testing and Materials, ASTM
   3. Standards of American National Standards Institute, ANSI
   4. Standards of American Iron and Steel Institute, AISI
   5. Standards of National Electrical Manufacturer's Association, NEMA
   6. National Sanitation Foundation, NSF

C. Design Criteria:
   1. The SYSTEM SUPPLIER shall submit for approval the materials to meet the design conditions. Materials of all piping valve actuators and appurtenances shall be compatible with the intended use and service.

1.3 SUBMITTALS

1. Submit for approval with shop drawings required under Section 11629, Single Stage Centrifugal Blower System
2. Submit detailed drawings and data for valve actuators.

3. For electric and pneumatically actuated valves, prepare and submit a table of the torque requirements for the valve and the corresponding valve actuator to demonstrate that the valve actuator as been properly sized and will satisfy the minimum torque requirements.

B. Certificates: Submit certificates of compliance with applicable referenced standards.

C. Technical Manuals: Complete operation and maintenance instruction, lubrication schedules and troubleshooting guides shall be submitted for review in accordance with the procedures and requirements set forth in Section 01730, Installation, Operation and Maintenance Manuals; Section 01731, Training of Operations and Maintenance Personnel, and as specified in Divisions 13, Special Construction and 16, Electrical.

1.4 PRODUCTION, DELIVERY, STORAGE, AND HANDLING

A. Delivery, Storage and Handling of Materials: All materials shall be delivered to the site, stored, and handled in accordance with the manufacturer's instructions. SYSTEM SUPPLIER shall inspect shipments for damage and content well in advance of the date scheduled for incorporation in the Work. Refer to Sections 01610, Transportation and Handling of Goods and 01611, Protection of Goods for additional requirements.

B. Prior to Shipment:
1. Each valve actuator shall be plainly marked.

C. Prior to shipment, all valve actuators shall be thoroughly cleaned of sand, scale, rust or other foreign substances. Open ends of valve actuators shall be suitably closed to prevent the entrance of foreign matter after cleaning and during shipment and storage.

PART 2 - PRODUCTS

2.1 PROCESS SYSTEM DESIGN AND PERFORMANCE - NOT USED

2.2 EQUIPMENT DESIGN AND FABRICATION

A. General
1. All actuator motors and drives shall be sized to be non-overloading over the full range of operating conditions specified herein; and shall comply with state, federal and local requirements for designated area classification as shown and specified in the Contract Documents.
2. Bolts and nuts shall have hexagon heads.
3. Gasket material and installation shall conform to manufacturer's recommendations.

B. Equipment Design Requirements (for equipment and processes design by others)
1. Design Criteria:

a. The SYSTEM SUPPLIER shall submit for approval the torque calculations to meet the design conditions.
b. Valve actuators used in air, cyclic or non-lubricating fluid service shall be sufficiently oversized to withstand the stress of operation.

2.3 EQUIPMENT AND COMPONENTS:

A. Type 3 – Not Used.

B. Type 4 - Manual Valve Actuator (Lever):
1. For manual isolation valves 6 inches and smaller located below 6 feet off the floor elevation latch lock levers shall provide automatic, positive latching in at least 6 positions. Proximity type limit switches shall be provided for manual valves indicated on the drawings. Limit switches shall be programmed to register the open and closed positions
2. Manual Valves located at the discharge of a pump shall use a Type 5 Actuator.

C. Type 5 - Manual Valve Actuator (Gear Operated or Chain Wheel)
1. All manually actuated valves 8 inches and larger or valves located at the discharge of a pump shall be operated using a cast iron housed handwheel actuator with crank or optional chain wheel. All units to have adjustable open, closed, and intermediate position stops with provision to prevent accidental adjustment changes. The operating shaft shall be supported axially and radially at input end by permanently lubricated bronze thrust and sleeve bearings.
2. Manual valves located 6 feet or higher above the floor shall be supplied with a chain wheel operator. Proximity type limit switches shall be provided for manual valves indicated on the drawings. Limit switches shall be programmed to register the open and closed positions

D. Type 6 - Electric Valve Actuator:
1. General: Electric motor operators shall be furnished complete with motor, extension bonnet, torque tube, position indicator, integral reversing starter, and controls specified herein. All components shall be entirely suitable for outdoor service.
2. Electric motor operators shall conform to AWWA C504, except as specified herein.
3. Electric motor operators shall be capable of producing a minimum of 1.5 times the required operating torque for modulating duty.
4. Voltage: 110 VAC, 60 Hz, 1 phase. Provide for 110 volt control power or 24VDC, 4-20 mA control signal as required and as shown on drawings.
5. Enclosure: NEMA 6 (IP 68)
a. Non intrusive entry with no mechanical parts penetrating the control enclosure of the actuator.
b. Double O-ring seals
c. Separately sealed terminal compartment.
6. Mounting Hardware: Provide extension bonnet, torque tube and bonnet supported floorstand for mounting each electric operator on valve with shaft vertical in horizontal pipeline.
7. Controls:
a. Provide dry contacts for remote indication of:
1) Ready to operate-control voltage available, fuses and overloads intact

2) Valve full open
3) Valve full closed

b. Provide 4 – 20 mAmp for modulating input and output status

8. Display: Provide LCD Display of valve position, calibration and diagnostics.
9. Starter: Provide reversing contactor in NEMA 4 enclosure integrally mounted on operator.
10. Thermal Protection: Provide winding thermal protection.
11. A feedback position transmitter shall be supplied with each modulating service valve.
12. Provide valve disc position indicator on operator
13. Manufacturer:
    a. Auma
    b. Rotork IQ

E. Modulating Valve Positioner
1. General: Valve positioner shall be furnished complete with visual position indicator, integral feedback module, and controls specified herein. All components shall be entirely suitable for outdoor service. Valve positioner shall utilize Analog (4-20 mA) interface.
2. Mounting Hardware: Provide for mounting positioner on valve/actuator with shaft vertical in horizontal pipeline.
3. Manufacturer:
    a. Tyco – Avid EasyCal or SmartCal Valve Positioner.
    b. Fisher Controls FIELDVIEW® DVC5000 Series
    c. Flowserve LOGIX 1400 Series
    d. Foxboro I/A Series SRD 991
    e. Yokogowa YVP110
    f. "or Equal" will be not be considered.

PART 3 - EXECUTION

3.1 INSPECTION

A. The SYSTEM SUPPLIER shall inspect all valve actuators prior to equipment fabrication to ensure that it is free of defects in material and workmanship. The compatibility of all valve and valve actuators shall be verified.

3.2 INSTALLATION

A. All field installed valve actuators outside of packaged or skid mounted systems shall be installed by the Contractor.

B. All rack or unit mounted piping installed by the SYSTEM SUPPLIER. Valve Actuators shall be installed in complete accordance with the manufacturer's instructions and recommendations.

C. All piping shall be supported in a manner that will not put undue strain on equipment. Supports shall prevent transmission of vibration and strain to equipment and shall keep piping aligned.

D. Where supports are not shown, horizontal runs shall be supplied with sufficient supports to maintain deflection of pipelines in a span at less than ¼-inch, when filled with water.

E. Piping shall not interfere with access to valves or equipment, or obstruct removal spaces required for maintenance of equipment.

F. A molybdenum disulfide anti-seize compound shall be applied to all threads in mechanical connections such as bolts, studs, screws, etc. unless otherwise noted.

+ + END OF SECTION + +

THIS PAGE INTENTIONALLY LEFT BLANK

CITY OF SURPRISE

PUBLIC WORKS DEPARTMENT

SPA 1 WRF CAPACITY EXP FACILITY RERATING

11401 N 136TH AVENUE, SURPRISE AZ

TOWNSHIP 3N, RANGE 1W, SECTION 22

SEPTEMBER 2022

VOLUME 1 OF 1

JET AERATION SYSTEM PROCUREMENT SET

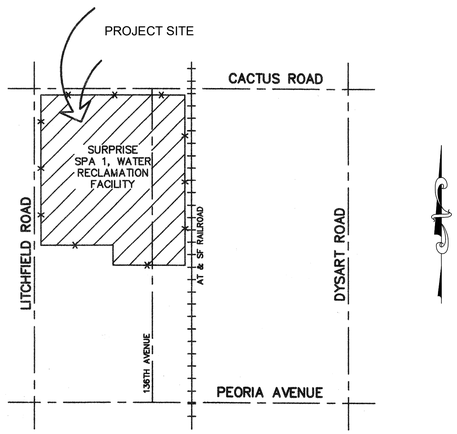

VICINITY MAP

NTS

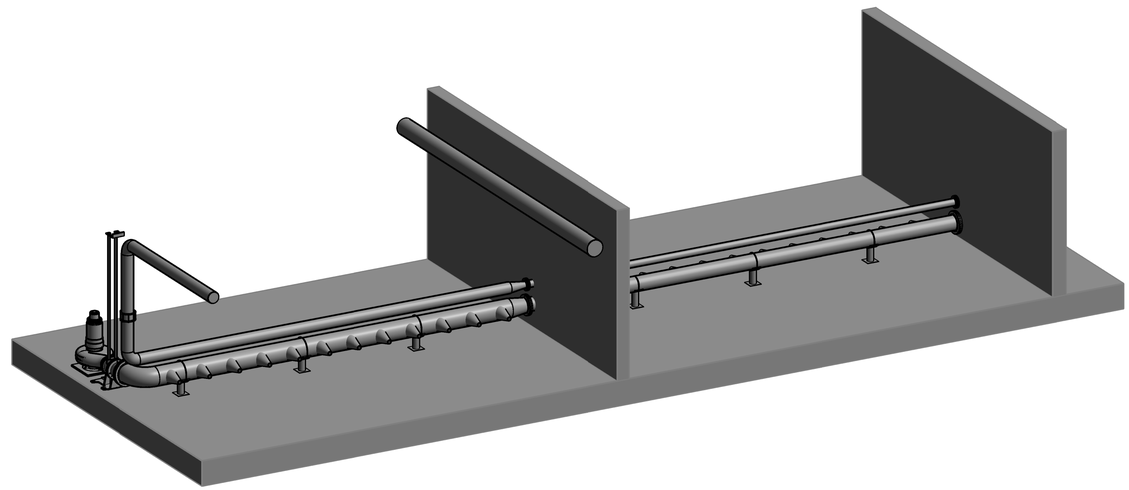

THESE PLANS ARE FOR OFFICIAL USE ONLY AND MAY NOT BE SHARED WITH OTHERS EXCEPT AS REQUIRED TO FULLFILL THE OBLIGATIONS OF YOUR CONTRACT WITH THE CITY OF SURPRISE.

ALL MATERIAL COMING IN CONTACT WITH POTABLE WATER MUST MEET NSF STANDARDS 6 & 61 IN ACCORDANCE WITH R18-4-213

CITY PROJECT MANAGER

CITY OF SURPRISE
16000 N. CIVIL PLAZA
SURPRIZE AZ, 85374

PHONE: (623) 222-6130

CONTACT: REYNALDO ALDAVA

ENGINEER

WATERWORKS ENGINEERS
7500 N. DOBSON ROAD, SUITE 200
SCOTTSDALE, AZ 85256

PHONE: (480) 661-1742
FAX: (480) 661-1743

CONTACT: JOHN MATTA P.E.

APPROVALS

CITY OF SURPRISE SIGNATURE BLOCK

THIS SET OF PLANS HAS BEEN REVIEWED FOR COMPLIANCE WITH CITY REQUIREMENTS PRIOR TO ISSUANCE OF PERMITS. THE CITY NEITHER ACCEPTS NOR ASSUMES ANY LIABILITY FOR ERRORS OR OMISSIONS. THIS COMPLIANCE APPROVAL SHALL NOT PREVENT THE CITY ENGINEER FROM REQUIRING CORRECTIONS OF ERRORS OR OMISSIONS IN PLANS FOUND TO BE IN VIOLATION OF LAW OR ORDINANCES.

APPROVED: _____
CITY OF SURPRISE ENGINEER DATE

APPROVED: _____
MARICOPA COUNTY ENVIRONMENTAL SERVICES DEPARTMENT DATE

JET AERATION

PROCUREMENT SPEC

NO.	REVISION	REV BY	CKD BY	DATE
-	-	-	-	-

SURPRISE ARIZONA

WATERWORKS ENGINEERS

CITY OF SURPRISE
SPA 1 WRF CAPACITY EXP FACILITY RERATING

FELIX CONSTRUCTION

GENERAL

COVER SHEET

CHECKED JHM

DRAWN MC

DESIGN DB

DATE
SEPTEMBER 2022

PROJECT NUMBER
20-018

DRAWING NUMBER
G-00-001

SHEET NO. 1 OF

REUSE OF DOCUMENTS: THIS DOCUMENT, AND THE IDEAS AND DESIGN INCORPORATED HEREIN, AS AN INSTRUMENT OF PROFESSIONAL SEVICE, IS THE PROPERTY OF WATER WORKS ENGINEERS, LLC. AND IS NOT TO BE USED, IN WHOLE OR PART, FOR ANY OTHER PROJECT WITHOUT THE WRITTEN AUTHORIZATION OE WATER WORKS ENGINEERS,LLC.

FILE PATH: BIM 360://20-018 SPA 1 WRF Capacity Exp Facility Rerating/2018D-M-Blower Building.rvt

DATE AND TIME: 9/22/2022 9:54:16 AM

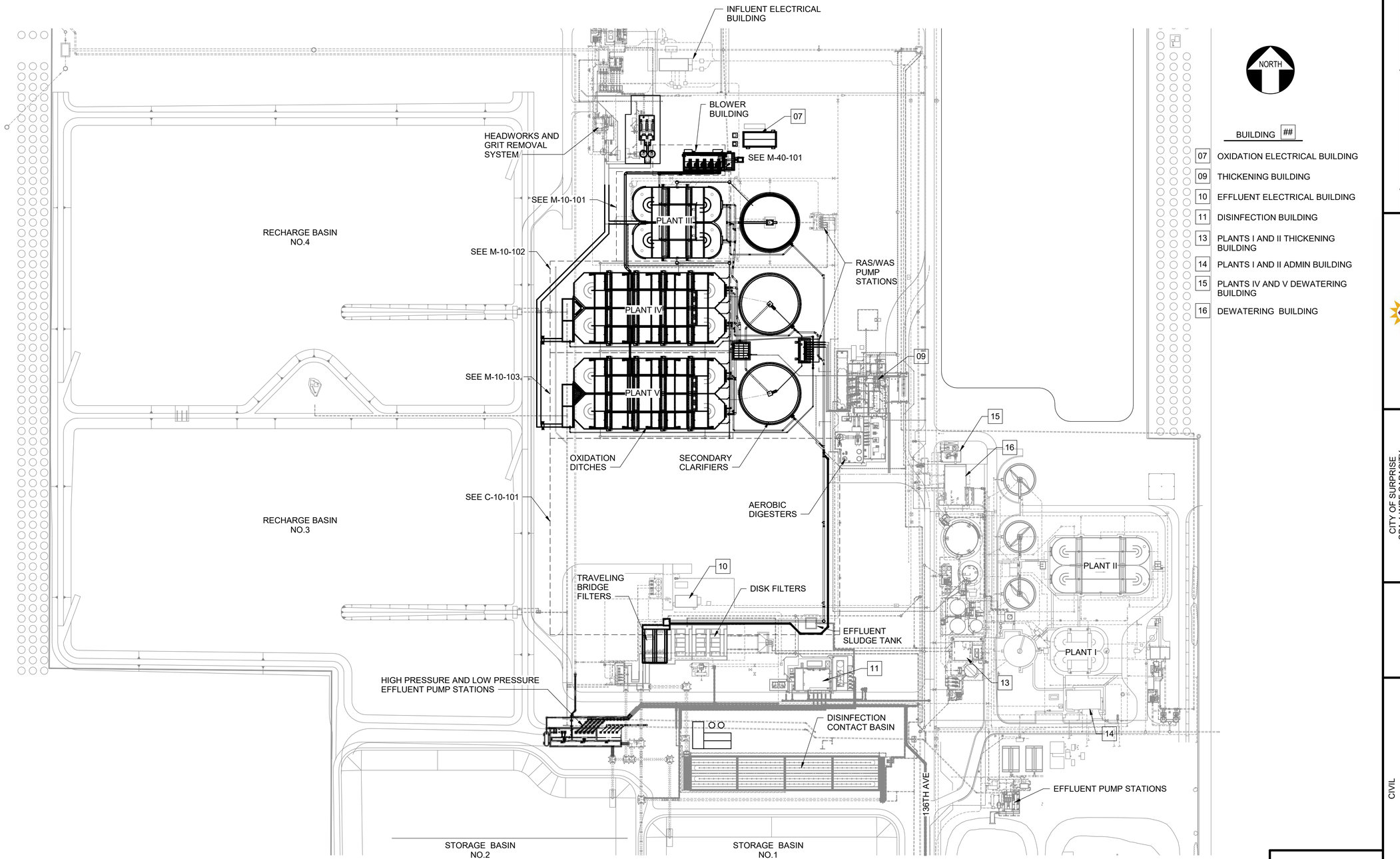

PLAN
1" = 100'-0"

NO.	REVISION	REV BY	CKD BY	DATE
-	-	-	-	-

SURPRISE ARIZONA

CITY OF SURPRISE
SPA 1 WRF CAPACITY
EXP FACILITY
RERATING

WATERWORKS ENGINEERS

FELIX CONSTRUCTION

CIVIL

OVERALL SITE PLAN

CHECKED JHM
DRAWN MC
DESIGN DB

JET AERATION

PROCUREMENT SPEC

DATE
SEPTEMBER 2022
PROJECT NUMBER
20-018
DRAWING NUMBER
C-00-101
SHEET NO. 10 OF 31

REUSE OF DOCUMENTS: THIS DOCUMENT, AND THE IDEAS AND DESIGN INCORPORATED HEREIN, AS AN INSTRUMENT OF PROFESSIONAL SEVICE, IS THE PROPERTY OF WATER WORKS ENGINEERS, LLC. AND IS NOT TO BE USED, IN WHOLE OR PART, FOR ANY OTHER PROJECT WITHOUT THE WRITTEN AUTHORIZATION OE WATER WORKS ENGINEERS,LLC.

FILE PATH: BIM 360://20-018 SPA 1 WRF Capacity Exp Facility Rerating/2018D-M-Blower Building.rvt

DATE AND TIME: 9/20/2022 12:42:58 PM

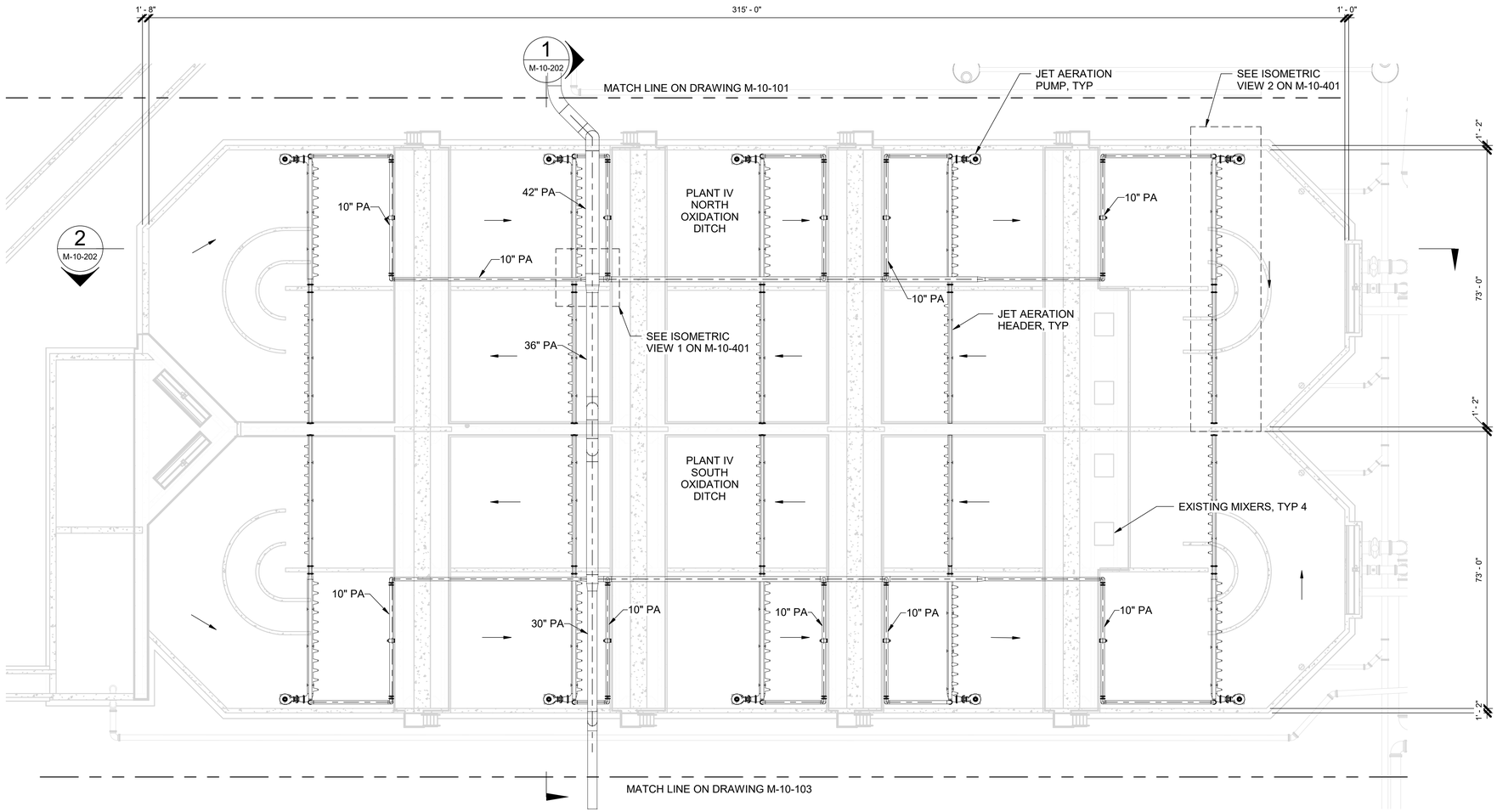

PLAN
1/16" = 1'-0"

16 0 6 32 FEET
SCALE 1/16"=1'-0"

NORTH

NO.	REVISION	REV BY	CKD BY	DATE
-	-	-	-	-

SURPRISE
ARIZONA

CITY OF SURPRISE
SPA 1 WRF CAPACITY
EXP FACILITY
RERATING

WATER WORKS ENGINEERS

FELIX CONSTRUCTION

MECHANICAL
PLANT IV OXIDATION
DITCH AERATION SYSTEM
PLAN

CHECKED JHM
DRAWN MC
DESIGN DB

JET AERATION

PROCUREMENT SPEC

DATE
SEPTEMBER 2022
PROJECT NUMBER
20-018
DRAWING NUMBER
M-10-102
SHEET NO. 19 OF

REUSE OF DOCUMENTS: THIS DOCUMENT, AND THE IDEAS AND DESIGN INCORPORATED HEREIN, AS AN INSTRUMENT OF PROFESSIONAL SEVICE, IS THE PROPERTY OF WATER WORKS ENGINEERS, LLC. AND IS NOT TO BE USED, IN WHOLE OR PART, FOR ANY OTHER PROJECT WITHOUT THE WRITTEN AUTHORIZATION OE WATER WORKS ENGINEERS,LLC.

FILE PATH: BIM 360://20-018 SPA 1 WRF Capacity Exp Facility Rerating/2018D-M-Blower Building.rvt

DATE AND TIME: 9/20/2022 12:43:29 PM

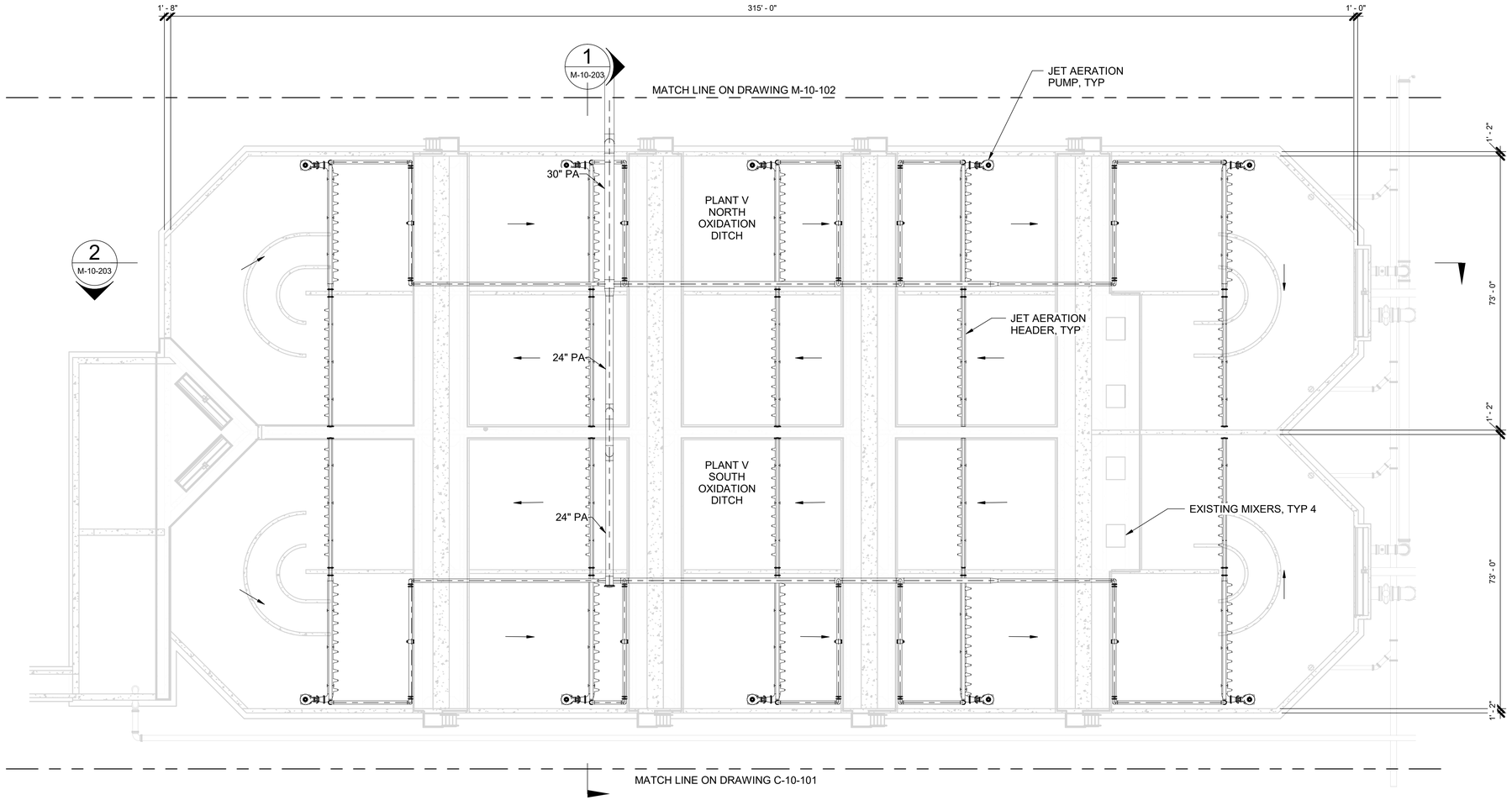

PLAN
1/16" = 1'-0"

16 0 6 32 FEET
SCALE 1/16"=1'-0"

NORTH

NO.	REVISION	REV BY	CKD BY	DATE
-	-	-	-	-

SURPRISE
ARIZONA

CITY OF SURPRISE
SPA 1 WRF CAPACITY
EXP FACILITY
RERATING

WATERWORKS ENGINEERS

FELIX CONSTRUCTION

MECHANICAL
PLANT V OXIDATION
DITCH AERATION SYSTEM
PLAN

CHECKED JHM
DRAWN MC
DESIGN DB

JET AERATION

PROCUREMENT SPEC

DATE
SEPTEMBER 2022
PROJECT NUMBER
20-018
DRAWING NUMBER
M-10-103
SHEET NO. 20 OF

REUSE OF DOCUMENTS: THIS DOCUMENT, AND THE IDEAS AND DESIGN INCORPORATED HEREIN, AS AN INSTRUMENT OF PROFESSIONAL SEVICE, IS THE PROPERTY OF WATER WORKS ENGINEERS, LLC. AND IS NOT TO BE USED, IN WHOLE OR PART, FOR ANY OTHER PROJECT WITHOUT THE WRITTEN AUTHORIZATION OE WATER WORKS ENGINEERS,LLC.

FILE PATH: BIM 360://20-018 SPA 1 WRF Capacity Exp Facility Rerating/2018D-M-Blower Building.rvt

DATE AND TIME: 9/20/2022 12:43:31 PM

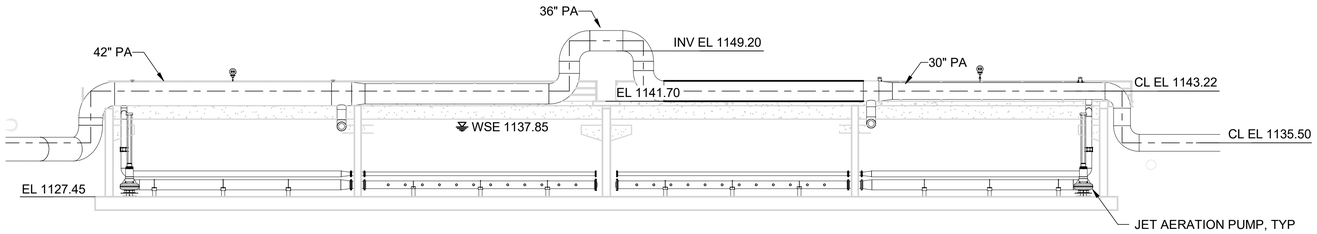

1 SECTION
M-10-102 3/32" = 1'-0"

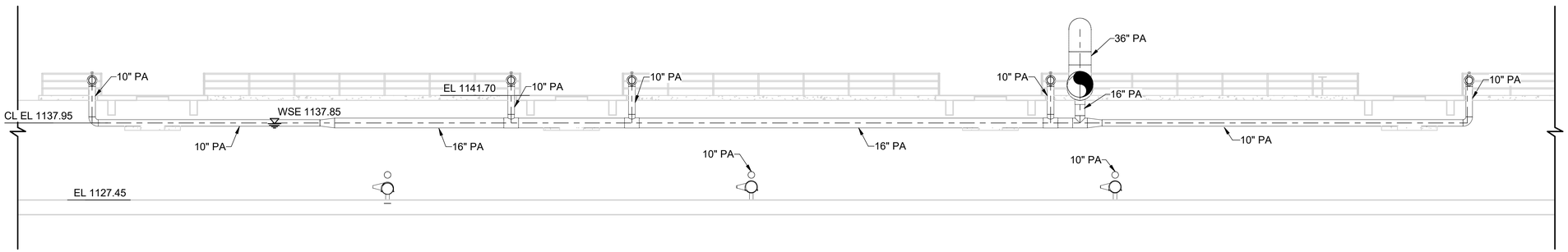

2 SECTION
M-10-102 1/8" = 1'-0"

8 0 8 16 FEET
SCALE 3/32"=1'-0"

8 0 8 16 FEET
SCALE 1/8"=1'-0"

JET AERATION

PROCUREMENT SPEC

NO.	REVISION	REV BY	CKD BY	DATE
-	-	-	-	-

SURPRISE ARIZONA

CITY OF SURPRISE
SPA 1 WRF CAPACITY EXP FACILITY RERATING

WATERWORKS ENGINEERS

FELIX CONSTRUCTION

MECHANICAL
PLANT IV OXIDATION DITCH AERATION SYSTEM SECTIONS

CHECKED JHM
DRAWN MC
DESIGN DB

DATE: SEPTEMBER 2022
PROJECT NUMBER: 20-018
DRAWING NUMBER: M-10-202
SHEET NO. 21 OF

REUSE OF DOCUMENTS: THIS DOCUMENT, AND THE IDEAS AND DESIGN INCORPORATED HEREIN, AS AN INSTRUMENT OF PROFESSIONAL SEVICE, IS THE PROPERTY OF WATER WORKS ENGINEERS, LLC. AND IS NOT TO BE USED, IN WHOLE OR PART, FOR ANY OTHER PROJECT WITHOUT THE WRITTEN AUTHORIZATION OE WATER WORKS ENGINEERS,LLC.

FILE PATH: BIM 360://20-018 SPA 1 WRF Capacity Exp Facility Rerating/2018D-M-Blower Building.rvt

DATE AND TIME: 9/20/2022 12:43:34 PM

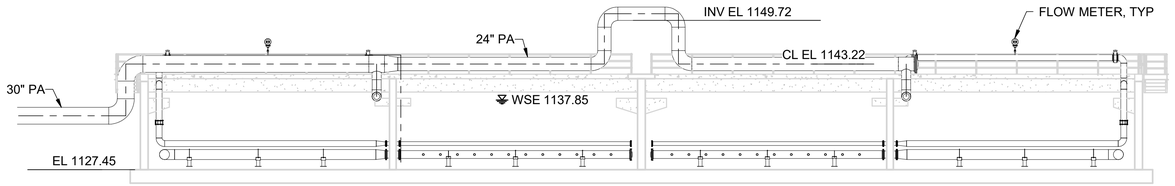

1 SECTION
M-10-103 3/32" = 1'-0"

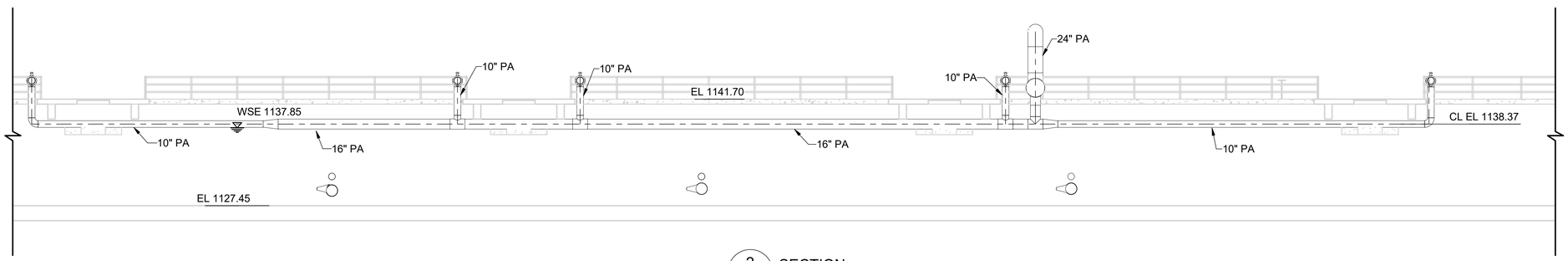

2 SECTION
M-10-103 1/8" = 1'-0"

8 0 8 16 FEET
SCALE 3/32"=1'-0"

8 0 8 16 FEET
SCALE 1/8"=1'-0"

JET AERATION

PROCUREMENT SPEC

NO.	REVISION	REV BY	CKD BY	DATE
-	-	-	-	-

SURPRISE ARIZONA

CITY OF SURPRISE
SPA 1 WRF CAPACITY
EXP FACILITY
RERATING

WATERWORKS ENGINEERS

FELIX CONSTRUCTION

MECHANICAL
PLANT V OXIDATION
DITCH AERATION SYSTEM
SECTIONS

CHECKED JHM
DRAWN MC
DESIGN DB

DATE
SEPTEMBER 2022
PROJECT NUMBER
20-018
DRAWING NUMBER
M-10-203
SHEET NO. 22 OF

REUSE OF DOCUMENTS: THIS DOCUMENT, AND THE IDEAS AND DESIGN INCORPORATED HEREIN, AS AN INSTRUMENT OF PROFESSIONAL SEVICE, IS THE PROPERTY OF WATER WORKS ENGINEERS, LLC. AND IS NOT TO BE USED, IN WHOLE OR PART, FOR ANY OTHER PROJECT WITHOUT THE WRITTEN AUTHORIZATION OE WATER WORKS ENGINEERS,LLC.

FILE PATH: BIM 360://20-018 SPA 1 WRF Capacity Exp Facility Rerating/2018D-M-Blower Building.rvt

DATE AND TIME: 9/20/2022 12:43:36 PM

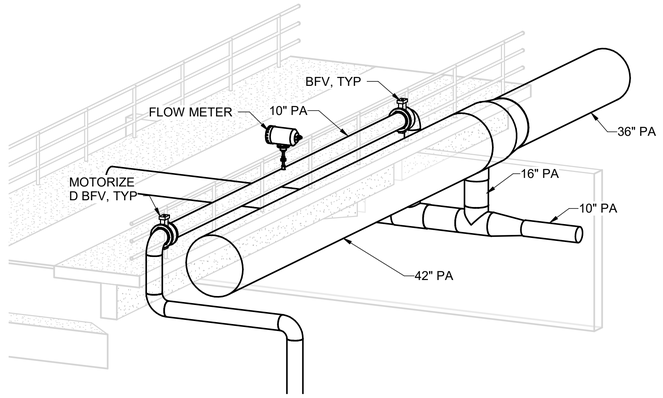

1 ISOMETRIC
NTS

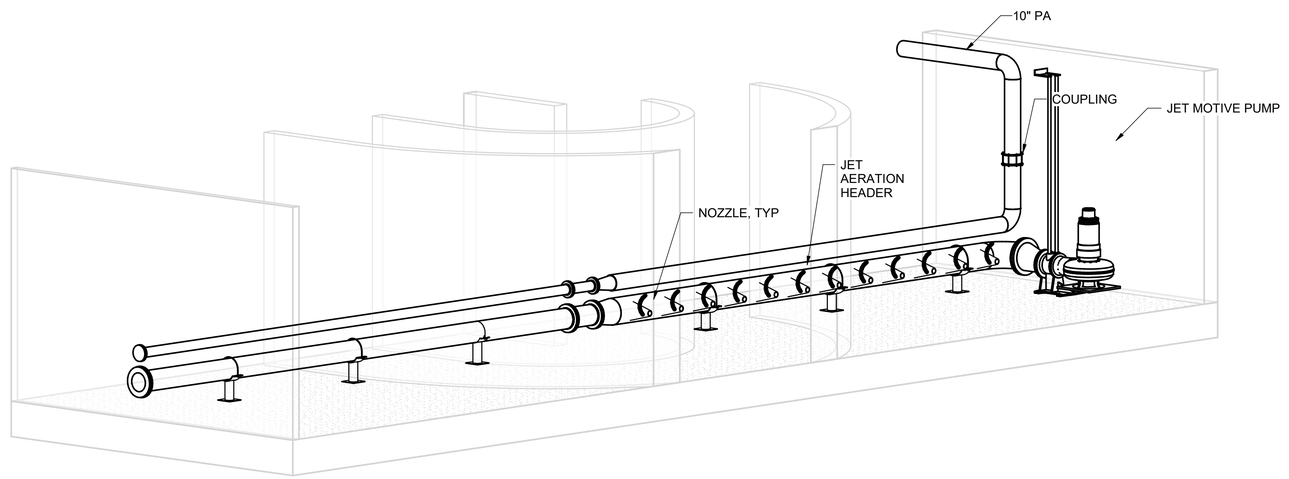

2 ISOMETRIC
NTS

NO.	REVISION	REV BY	CKD BY	DATE
-	-	-	-	-

SURPRISE
ARIZONA

CITY OF SURPRISE
SPA 1 WRF CAPACITY
EXP FACILITY
RERATING

WATERWORKS ENGINEERS

FELIX CONSTRUCTION

MECHANICAL
OXIDATION DITCHES
ISOMETRIC VIEWS

DESIGN DB | DRAWN MC | CHECKED JHM

JET AERATION

PROCUREMENT SPEC

DATE: SEPTEMBER 2022
PROJECT NUMBER: 20-018
DRAWING NUMBER: M-10-401
SHEET NO. 23 OF

REUSE OF DOCUMENTS: THIS DOCUMENT, AND THE IDEAS AND DESIGN INCORPORATED HEREIN, AS AN INSTRUMENT OF PROFESSIONAL SEVICE, IS THE PROPERTY OF WATER WORKS ENGINEERS, LLC. AND IS NOT TO BE USED, IN WHOLE OR PART, FOR ANY OTHER PROJECT WITHOUT THE WRITTEN AUTHORIZATION OE WATER WORKS ENGINEERS,LLC.

FILE PATH: BIM 360://20-018 SPA 1 WRF Capacity Exp Facility Rerating/2018D-M-Blower Building.rvt

DATE AND TIME: 9/20/2022 12:43:38 PM

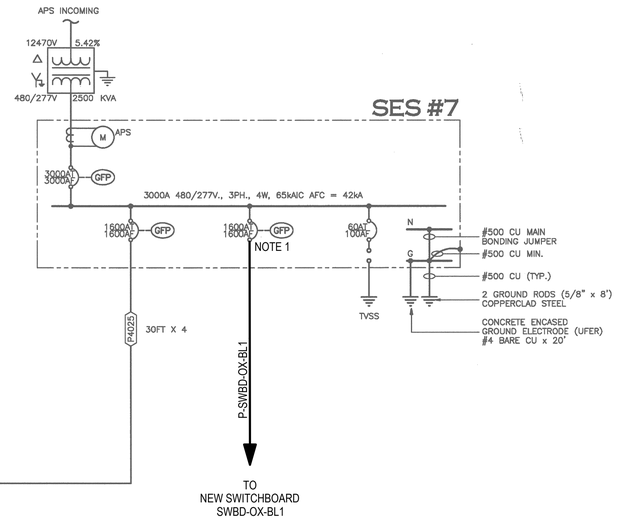

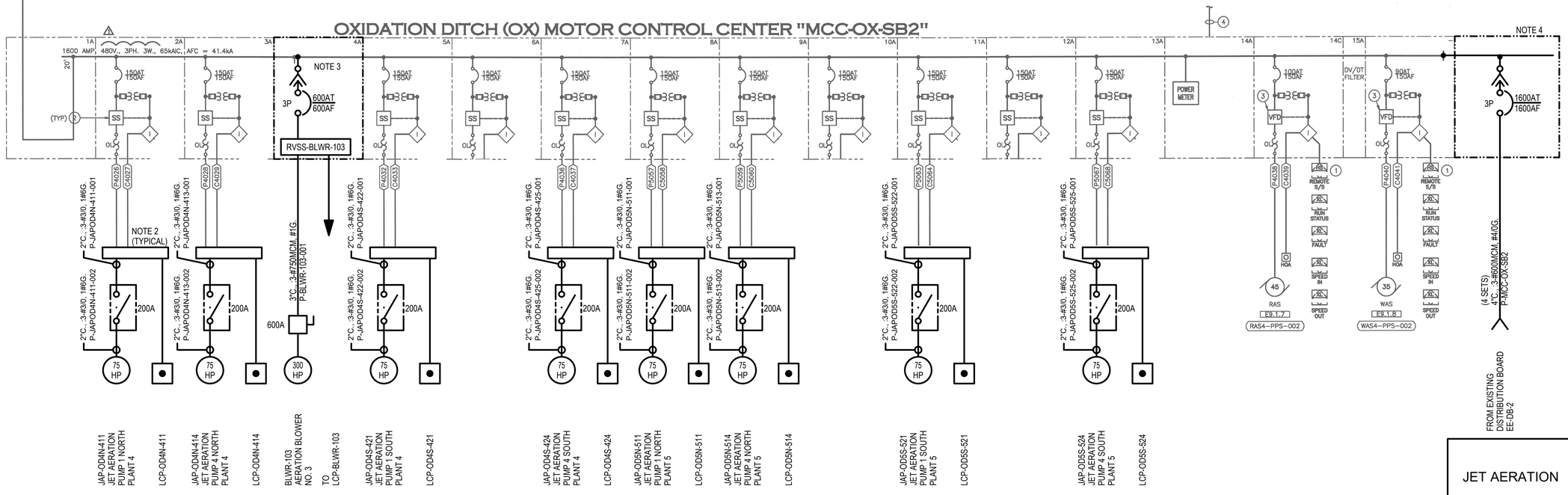

1 EXISTING MCC-OX-SB2 ONE-LINE DIAGRAM - NEW WORK

\- SCALE: NONE

GENERAL NOTE:

ALL EXISTING EQUIPMENT, FEEDERS, AND GROUNDING SYSTEM SHOWN ON THIS ONE-LINE ARE TO REMAIN EXISTING UNLESS NOTED OTHERWISE.

NOTES:

1. CONTRACTOR TO RE-USE EXISTING CIRCUIT BREAKER AT SES #7 FOR NEW POWER FEED TO NEW SWITCHBOARD. CONTRACTOR TO PROVIDE NEW LABEL AT EXISTING CUBICLE FOR NEW LOAD.
2. PROVIDE NEW 200A RATED LUGS AT EXISTING PULLBOX FOR CIRCUIT CONTINUITY OF EXISTING FEEDERS AND NEW FEEDERS.
3. PROVIDE NEW 600A BREAKER AND REVERSE VOLTAGE SOFT STARTER IN EXISTING MCC BUCKET.
4. PROVIDE NEW 1600A BUS SECTION TO EXISTING MCC. PROVIDE NEW CIRCUIT BREAKER WITH 65kAIC RATING.

NO.	REVISION	REV BY	CKD BY	DATE
-	-	-	-	-

SURPRISE ARIZONA

CITY OF SURPRISE
SPA 1 WRF CAPACITY EXP
FACILITY RERATING

WATERWORKS ENGINEERS

ELECTRICAL

EXISTING MCC-OX-SB2 ONE-LINE DIAGRAM - NEW WORK

DESIGN ER | DRAWN CAY | CHECKED BGY

JET AERATION

PROCUREMENT SPEC

DATE: JULY 2022
PROJECT NUMBER: 20-018
DRAWING NUMBER: E-00-102
SHEET NO. ###

REUSE OF DOCUMENTS: THIS DOCUMENT, AND THE IDEAS AND DESIGN INCORPORATED HEREIN, AS AN INSTRUMENT OF PROFESSIONAL SEVICE, IS THE PROPERTY OF WATER WORKS ENGINEERS, LLC. AND IS NOT TO BE USED, IN WHOLE OR PART, FOR ANY OTHER PROJECT WITHOUT THE WRITTEN AUTHORIZATION OE WATER WORKS ENGINEERS,LLC.

FILE PATH:C:\USERS\EDGARR\ACCDOCS\WATER WORKS ENGINEERS\20-018 SPA 1 WRF CAPACITY EXP FACILITY RERATING\PROJECT FILES\DRAWINGS\2018D-E-00-102.DWG

DATE AND TIME: 8/12/2022 3:22:10 PM

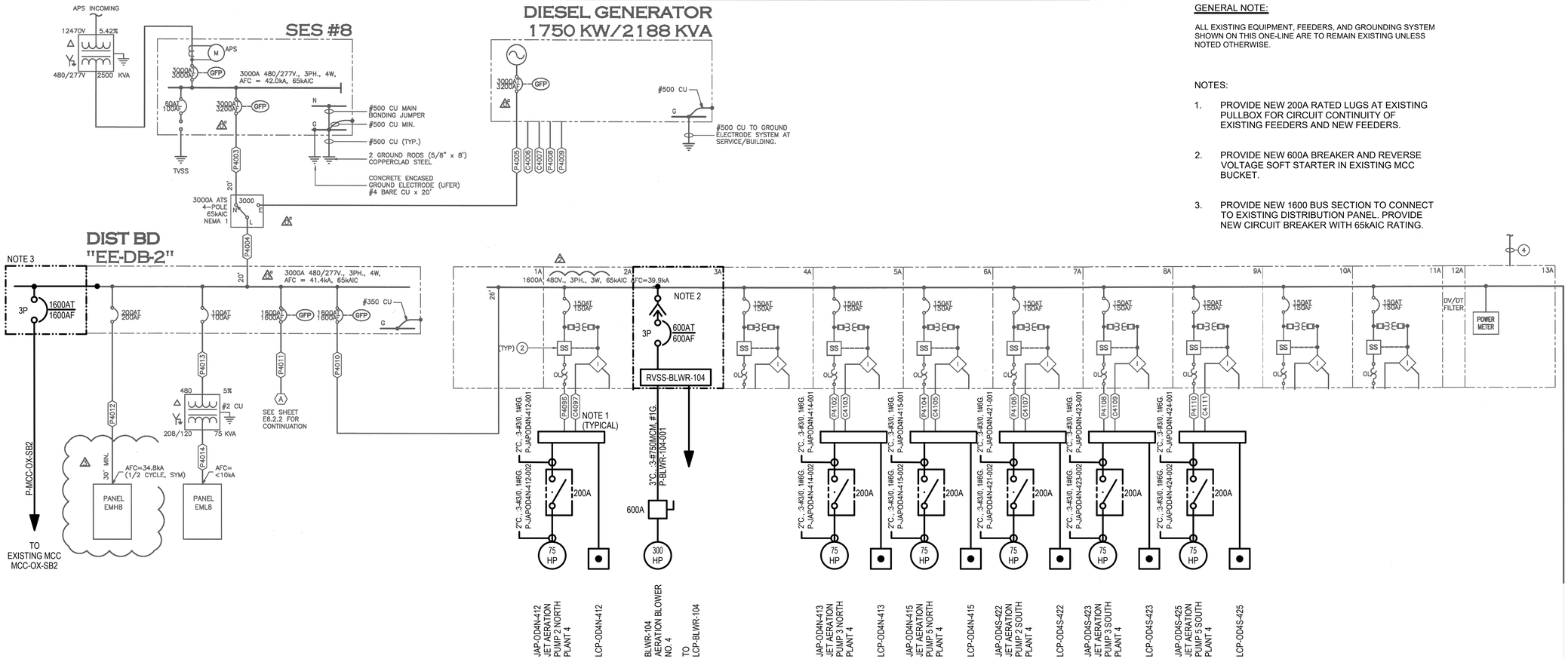

GENERAL NOTE:

ALL EXISTING EQUIPMENT, FEEDERS, AND GROUNDING SYSTEM SHOWN ON THIS ONE-LINE ARE TO REMAIN EXISTING UNLESS NOTED OTHERWISE.

NOTES:

1. PROVIDE NEW 200A RATED LUGS AT EXISTING PULLBOX FOR CIRCUIT CONTINUITY OF EXISTING FEEDERS AND NEW FEEDERS.
2. PROVIDE NEW 600A BREAKER AND REVERSE VOLTAGE SOFT STARTER IN EXISTING MCC BUCKET.
3. PROVIDE NEW 1600 BUS SECTION TO CONNECT TO EXISTING DISTRIBUTION PANEL. PROVIDE NEW CIRCUIT BREAKER WITH 65kAIC RATING.

1 EXISTING MCC-OX4-EE ONE-LINE DIAGRAM - NEW WORK
- SCALE: NONE

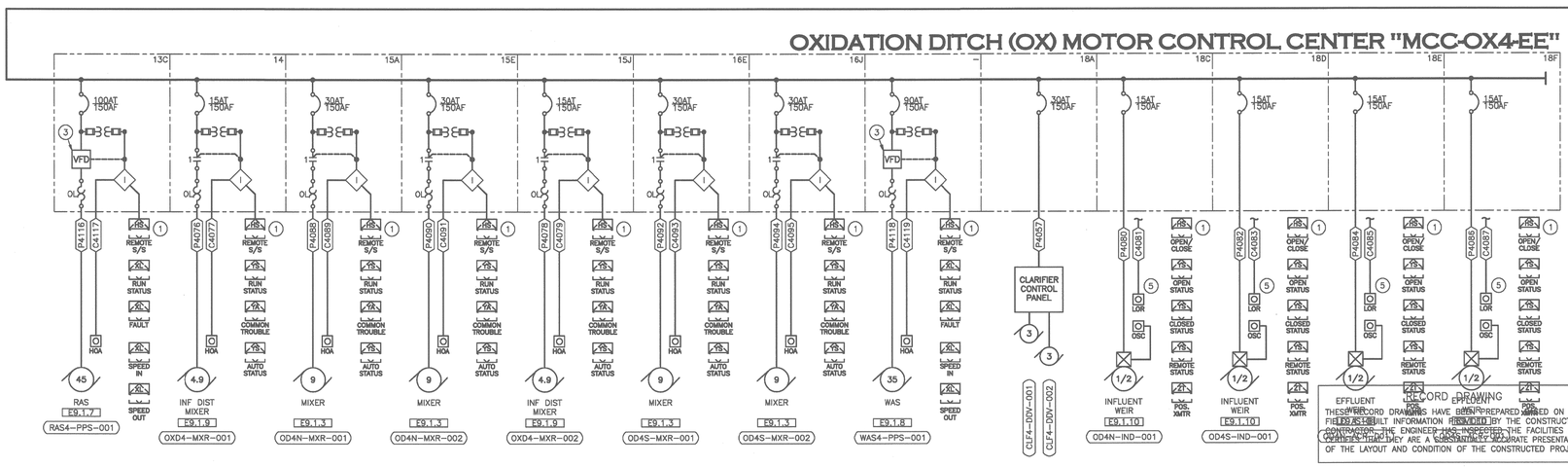

NOTES:

1. CONTRAC BREAKER NEW SWI NEW LABE LOAD.
2. PROVIDE PULLBOX EXISTING
3. PROVIDE VOLTAGE BUCKET.

NO.	REVISION	REV BY	CKD BY	DATE
-	-	-	-	-

SURPRISE ARIZONA

CITY OF SURPRISE
SPA 1 WRF CAPACITY EXP
FACILITY RERATING

WATERWORKS ENGINEERS

JET AERATION

PROCUREMENT SPEC

ELECTRICAL

EXISTING MCC-OX4-EE ONE-LINE DIAGRAM - NEW WORK

CHECKED BGY
DRAWN CAY
DESIGN ER

DATE JULY 2022
PROJECT NUMBER 20-018
DRAWING NUMBER E-00-103
SHEET NO. ###

REUSE OF DOCUMENTS: THIS DOCUMENT, AND THE IDEAS AND DESIGN INCORPORATED HEREIN, AS AN INSTRUMENT OF PROFESSIONAL SEVICE, IS THE PROPERTY OF WATER WORKS ENGINEERS, LLC. AND IS NOT TO BE USED, IN WHOLE OR PART, FOR ANY OTHER PROJECT WITHOUT THE WRITTEN AUTHORIZATION OE WATER WORKS ENGINEERS,LLC.

FILE PATH:C:\USERS\EDGARR\ACCDOCS\WATER WORKS ENGINEERS\20-018 SPA 1 WRF CAPACITY EXP FACILITY RERATING\PROJECT FILES\DRAWINGS\2018D-E-00-103.DWG

DATE AND TIME: 8/12/2022 3:22:10 PM

GENERAL NOTE:

ALL EXISTING EQUIPMENT, FEEDERS, AND GROUNDING SYSTEM SHOWN ON THIS ONE-LINE ARE TO REMAIN EXISTING UNLESS NOTED OTHERWISE.

NOTES:

1. PROVIDE NEW 200A RATED LUGS AT EXISTING PULLBOX FOR CIRCUIT CONTINUITY OF EXISTING FEEDERS AND NEW FEEDERS.
2. PROVIDE NEW 600A BREAKER AND REVERSE VOLTAGE SOFT STARTER IN EXISTING MCC BUCKET.

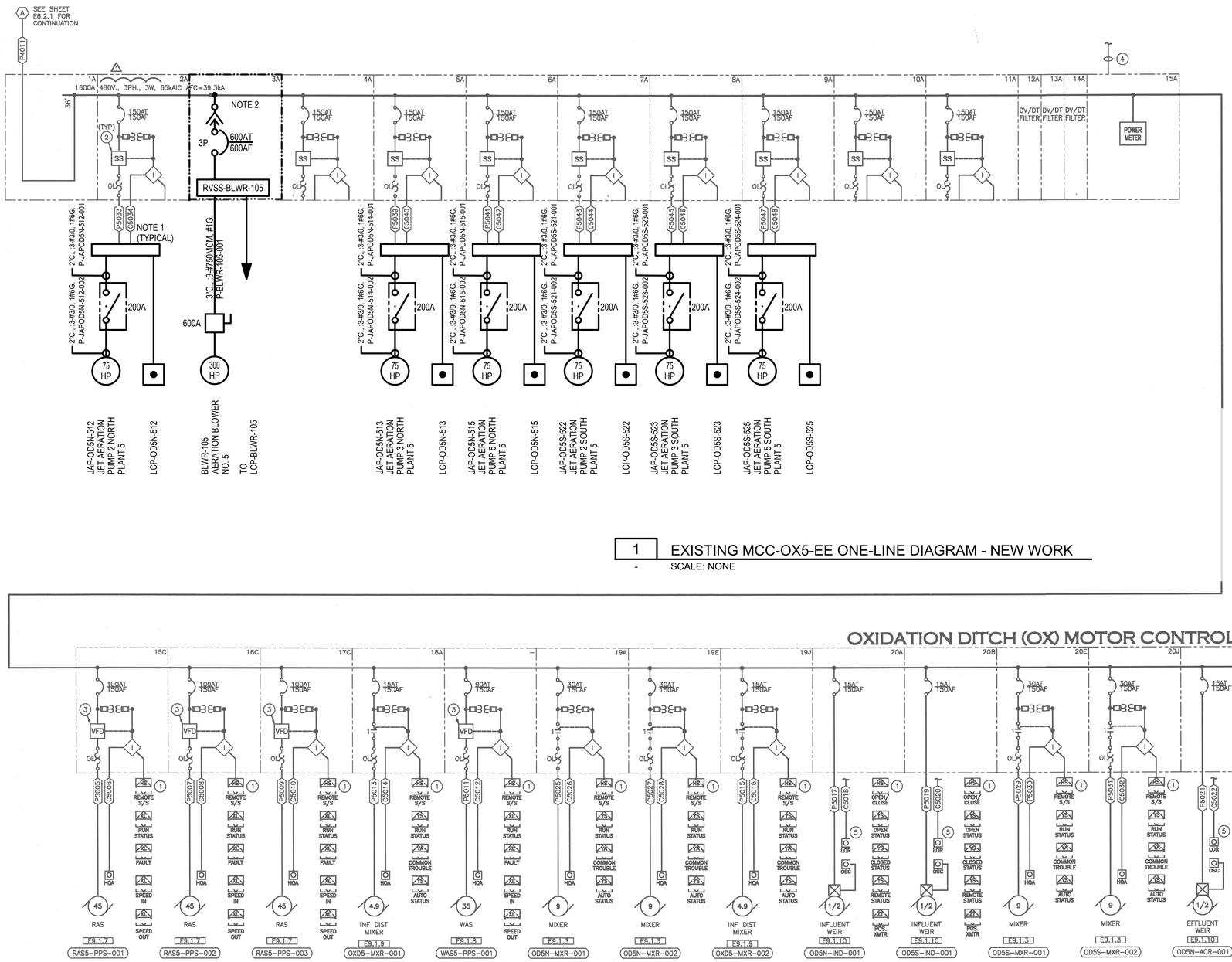

1 EXISTING MCC-OX5-EE ONE-LINE DIAGRAM - NEW WORK

\- SCALE: NONE

JET AERATION

PROCUREMENT SPEC

CITY OF SURPRISE
SPA1 WRF CAPACITY EXP
FACILITY RERATING

WATER WORKS ENGINEERS

SURPRISE ARIZONA

NO.	REVISION	REV BY	CKD BY	DATE
-	-	-	-	-

ELECTRICAL

EXISTING MCC-OX5-EE ONE-LINE DIAGRAM - NEW WORK

CHECKED BGY

DRAWN CAY

DESIGN ER

DATE JULY 2022

PROJECT NUMBER 20-018

DRAWING NUMBER E-00-104

SHEET NO. ###

REUSE OF DOCUMENTS: THIS DOCUMENT, AND THE IDEAS AND DESIGN INCORPORATED HEREIN, AS AN INSTRUMENT OF PROFESSIONAL SEVICE, IS THE PROPERTY OF WATER WORKS ENGINEERS, LLC. AND IS NOT TO BE USED, IN WHOLE OR PART, FOR ANY OTHER PROJECT WITHOUT THE WRITTEN AUTHORIZATION OE WATER WORKS ENGINEERS,LLC.

FILE PATH:C:\USERS\EDGARR\ACCDOCS\WATER WORKS ENGINEERS\20-018 SPA 1 WRF CAPACITY EXP FACILITY RERATING\PROJECT FILES\DRAWINGS\2018D-E-00-104.DWG

DATE AND TIME: 8/12/2022 3:22:10 PM

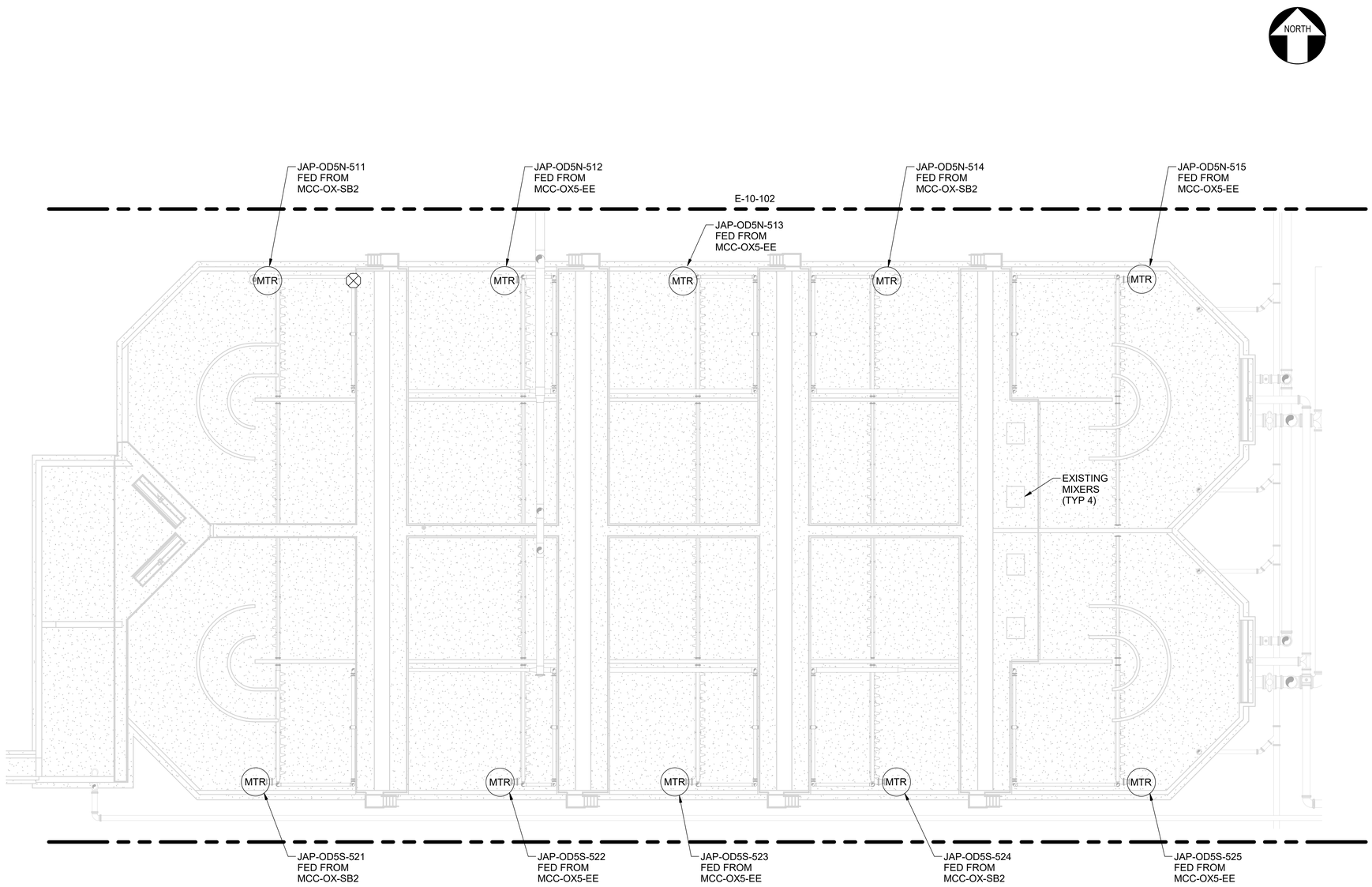

PLAN
1/16" = 1'-0"

NO.	REVISION	REV BY	CKD BY	DATE
-	-	-	-	-

SURPRISE
ARIZONA

CITY OF SURPRISE

WATERWORKS ENGINEERS

ELECTRICAL
PLANT V OXIDATION DITCH AERATION SYSTEM PLAN

CHECKED BGY
DRAWN JJJ
DESIGN LER

JET AERATION

PROCUREMENT SPEC

DATE: JULY 2022
PROJECT NUMBER: 20-018
DRAWING NUMBER: E-10-103
SHEET NO.

REUSE OF DOCUMENTS: THIS DOCUMENT, AND THE IDEAS AND DESIGN INCORPORATED HEREIN, AS AN INSTRUMENT OF PROFESSIONAL SEVICE, IS THE PROPERTY OF WATER WORKS ENGINEERS, LLC. AND IS NOT TO BE USED, IN WHOLE OR PART, FOR ANY OTHER PROJECT WITHOUT THE WRITTEN AUTHORIZATION OE WATER WORKS ENGINEERS,LLC.

FILE PATH: BIM 360://20-018 SPA 1 WRF Capacity Exp Facility Rerating/2018D-E-Blower Building.rvt

DATE AND TIME: 8/12/2022 10:38:33 AM

SCADA

PLC

MCC

TYP FOR BFV-412, 413, 414, & 415

TYP FOR FQIT-412, 413, 414, & 415

TYP FOR JAP-OD4N-412, JAP-OD4N-413, JAP-OD4N-414, & JAP-OD4N-415

OXD4 FLOW — FIR 1000 — FIT 1000

TOTALIZER — FIR 1000

POSITION INDICATION — AI 411 — AI 411

POSITION CONTROL — AI 411 — AI 411

FLOW — FQI 411 — FQI 411

TOTALIZED FLOW — FQI 411 — FQI 411

LAHH — AUTO DIAL WIN911

ODAN LEVEL — LIR 1002 — LIT 1002

REMOTE — HS 411A — HS 411A

START — YC 411B — YC 411B

STOP — YC 411C — YC 411C

RUN STATUS — YI 411 — YI 411

ALARM — YA 411 — YA 411

DO ANALYZER — AI 411 — AI 411

DO ANALYZER — AI 412 — AI 412

DO ANALYZER — AI 414 — AI 414

DO ANALYZER — AI 415 — AI 415

NH4 ANALYZER — AI 423 — AI 423

PLANT IV OX PLC GENERATOR — YA — GENERATOR

PLANT IV OX PLC UPS — YA — UPS

A | N-40-102
FROM PROCESS AIR BLOWERS

BAV-301

LCP-MOV-411

A FAIL YLA — G RUN YL — A SEAL YLA — A TEMP YLA — ETM KQI 411 — RESET — LOR HMS 411A — STR HMS 411B — STP HMS 411C — HMS 411D — MINI CAS — 120V — LCP-OD4N-411

42"x36"

16"-WSP-PA

10"x16"

10"-WSP-PA

16"x10"

A | N-10-102
TO PLANT IV SOUTH OXIDATION DITCH

SC 401-A — 120V

N-10-102 | B
FROM PLANT IV SOUTH DITCH NH4 PROBE

LIT 1002

120V — FQIT 411 — BFV-411 — M — MOV-OD4N-411

120V — FQIT 412 — BFV-412 — M — MOV-OD4N-412

120V — FQIT 413 — BFV-413 — M — MOV-OD4N-413

120V — FQIT 414 — BFV-414 — M — MOV-OD4N-414

120V — FQIT 415 — BFV-425 — M — MOV-OD4N-425

LOOP # 7202-1 — M — LE 1002

120V — 10"-WSP-PA — JAP-OD4N-411 — MSH 411 — TSH 411

120V — JAP-OD4N-412 — MSH 412 — TSH 412

120V — JAP-OD4N-413 — MSH 413 — TSH 413

120V — JAP-OD4N-414 — MSH 414 — TSH 414

120V — 10"-WSP-PA — JAP-OD4N-415 — MSH 415 — TSH 415

LOOP # 7203-1 — M

24"-DIP-ML — B | N-10-102 — TO PLANT IV SOUTH OXIDATION DITCH

24"-DIP-ML — C | N-10-102 — TO PLANT IV SOUTH OXIDATION DITCH BYPASS LINE

DO AE 411

DO AE 412

NH4 AE 413

DO AE 414

LOOP # 7201-1 — M — MXR-OD4N-001

DO AO 415

LOOP # 7201-2 — M — MXR-OD4N-002

ZONE 1 ANOXIC

ZONE 2 OXIC

ZONE 3 OXIC

ZONE 4 SWING

ZONE 5 OXIC

OXIDATION DITCH NORTH

2ND STAGE SELECTOR BASIN

LOOP # 7204-2 — M — MX-OXD4-002

1ST STAGE SELECTOR BASIN

LOOP # 7204-1 — M — MX-OXD4-001

12"-DIP-DR

D | N-10-102 — TO PLANT IV SOUTH OXIDATION DITCH

CHL-INF-.

E | N-10-102 — TO PLANT IV SOUTH OXIDATION DITCH

CHL-INF-.

F | N-10-102 — TO PLANT IV SOUTH OXIDATION DITCH

120V — FIT 2000 — FE 4000

FS-5
INFLUENT CHANNEL FROM PLANTS III, IV & V HEADWORKS/ GRIT CHAMBERS

INF-CHNL — FM — INF-CHNL

FS-26
RETURNED ACTIVATED SLUDGE (RAS) FROM PLNAT IV RAS/WAS PUMP STATION

B | N-10-102
TO PLANT IV SOUTH DITCH ANALYZER

JET AERATION

PROCUREMENT SPEC

NO.	REV/SION	REV BY	CKD BY	DATE
-	-	-	-	-

SURPRISE ARIZONA

CITY OF SURPRISE
SPA 1 WRF CAPACITY EXP FACILITY RERATING

WATERWORKS ENGINEERS

INSTRUMENTATION

PLANT IV NORTH OXIDATION DITCH SYSTEM P&I D

CHECKED JHM

DRAWN MIC

DESIGN DB

DATE
AUGUST 2022

PROJECT NUMBER
20-018

DRAWING NUMBER
N-10-101

SHEET NO. -

REUSE OF DOCUMENTS: THIS DOCUMENT, AND THE IDEAS AND DESIGN INCORPORATED HEREIN, AS AN INSTRUMENT OF PROFESSIONAL SEVICE, IS THE PROPERTY OF WATER WORKS ENGINEERS, LLC. AND IS NOT TO BE USED, IN WHOLE OR PART, FOR ANY OTHER PROJECT WITHOUT THE WRITTEN AUTHORIZATION OE WATER WORKS ENGINEERS,LLC.

FILE PATH: File Path

DATE AND TIME: 10/11/2013 3:33:16 PM

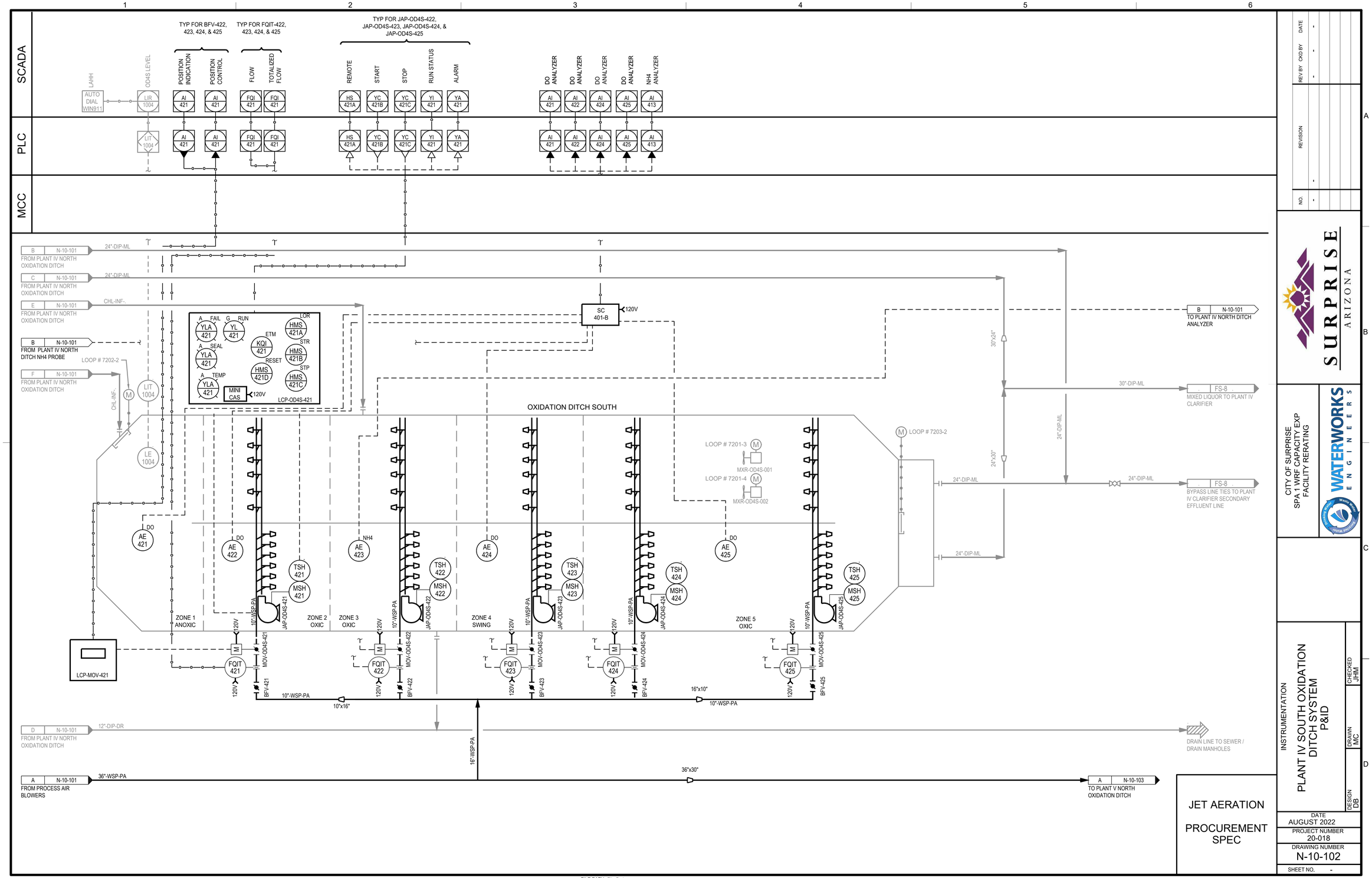

REUSE OF DOCUMENTS: THIS DOCUMENT, AND THE IDEAS AND DESIGN INCORPORATED HEREIN, AS AN INSTRUMENT OF PROFESSIONAL SEVICE, IS THE PROPERTY OF WATER WORKS ENGINEERS, LLC. AND IS NOT TO BE USED, IN WHOLE OR PART, FOR ANY OTHER PROJECT WITHOUT THE WRITTEN AUTHORIZATION OE WATER WORKS ENGINEERS,LLC.

FILE PATH: File Path

DATE AND TIME: 10/11/2013 3:33:16 PM

SCADA

PLC

MCC

TYP FOR BFV-512, 513, 514, & 515

TYP FOR FQIT-512, 513, 514, & 515

TYP FOR JAP-OD5N-512, JAP-OD5N-513, JAP-OD5N-514, & JAP-OD5N-515

OXD4 FLOW
TOTALIZER
POSITION INDICATION
POSITION CONTROL
FLOW
TOTALIZED FLOW
LAHH
ODAN LEVEL
REMOTE
START
STOP
RUN STATUS
ALARM
DO ANALYZER
DO ANALYZER
DO ANALYZER
DO ANALYZER
NH4 ANALYZER
PLANT IV OX PLC GENERATOR
PLANT IV OX PLC UPS

FIR 2000
FIT 2000
AI 511
FQI 511
AUTO DIAL WIN911
LIR 2002
LIT 2002
HS 511A
YC 511B
YC 511C
YI 511
YA 511
AI 512
AI 514
AI 515
AI 523
GENERATOR
UPS

A N-10-102
FROM PROCESS AIR BLOWERS

30"x24"
30"-WSP-PA

A N-10-104
TO PLANT V SOUTH OXIDATION DITCH

N-10-104 A
FROM PLANT V SOUTH DITCH NH4 PROBE

A FAIL G RUN
YLA 511
YL 511
A SEAL
YLA 511
A TEMP
YLA 511
MINI CAS
120V
LOR
HMS 511A
ETM
KQI 511
STR
HMS 511B
RESET
HMS 511D
STP
HMS 511C
LCP-OD5N-511

LCP-MOV-511

16"-WSP-PA
SC 501-A
120V
16"x10"

10"-WSP-PA
10"x16"
16"-WSP-PA

LIT 2002
LOOP # 7202-3
LE 2002
DO AE 511
DO AE 512
NH4 AE 513
DO AE 514
DO AE 515

120V FQIT 511 BFV-511 MOV-OD5N-511
120V FQIT 512 BFV-512 MOV-OD5N-512
120V FQIT 513 BFV-513 MOV-OD5N-513
120V FQIT 514 BFV-514 MOV-OD5N-514
120V FQIT 515 BFV-515 MOV-OD5N-515

10"-WSP-PA JAP-OD5N-511 TSH 511 MSH 511
10"-WSP-PA JAP-OD5N-512 TSH 512 MSH 512
10"-WSP-PA JAP-OD5N-513 TSH 513 MSH 513
10"-WSP-PA JAP-OD5N-514 TSH 514 MSH 514
10"-WSP-PA JAP-OD5N-515 TSH 515 MSH 515

LOOP # 7203-3
24"-DIP-ML B N-10-104 TO PLANT V SOUTH OXIDATION DITCH
24"-DIP-ML C N-10-104 TO PLANT V SOUTH OXIDATION DITCH BYPASS LINE

LOOP # 7201-5
MXR-OD5N-001
LOOP # 7201-6
MXR-OD5N-002

ZONE 1 ANOXIC
ZONE 2 OXIC
ZONE 3 OXIC
ZONE 4 SWING
ZONE 5 OXIC
OXIDATION DITCH NORTH

LOOP # 7204-4
2ND STAGE SELECTOR BASIN
MX-OXD5-002
LOOP # 7204-3
1ST STAGE SELECTOR BASIN
MX-OXD5-001

120V FIT 4000
FE 4000
INF-CHNL
FM
INF-CHNL
FS-5
INFLUENT CHANNEL FROM PLANTS III, IV & V HEADWORKS/ GRIT CHAMBERS

RETURNED ACTIVATED SLUDGE (RAS) FROM NEW PLANT V RAS/WAS PUMP STATION

12"-DIP-DR D N-10-104 TO PLANT V SOUTH OXIDATION DITCH
CHL-INF E N-10-104 TO PLANT V SOUTH OXIDATION DITCH
CHL-INF F N-10-104 TO PLANT V SOUTH OXIDATION DITCH

B N-10-104
TO PLANT V SOUTH DITCH ANALYZER

JET AERATION

PROCUREMENT SPEC

NO.	REV/SION	REV BY	CKD BY	DATE
-	-	-	-	-

SURPRISE ARIZONA

CITY OF SURPRISE
SPA 1 WRF CAPACITY EXP FACILITY RERATING

WATERWORKS ENGINEERS

INSTRUMENTATION
PLANT V NORTH OXIDATION DITCH SYSTEM P&ID

CHECKED JHM
DRAWN MC
DESIGN DB

DATE
AUGUST 2022
PROJECT NUMBER
20-018
DRAWING NUMBER
N-10-103
SHEET NO. -

REUSE OF DOCUMENTS: THIS DOCUMENT, AND THE IDEAS AND DESIGN INCORPORATED HEREIN, AS AN INSTRUMENT OF PROFESSIONAL SEVICE, IS THE PROPERTY OF WATER WORKS ENGINEERS, LLC. AND IS NOT TO BE USED, IN WHOLE OR PART, FOR ANY OTHER PROJECT WITHOUT THE WRITTEN AUTHORIZATION OE WATER WORKS ENGINEERS,LLC.

FILE PATH: File Path

DATE AND TIME: 10/11/2013 3:33:16 PM

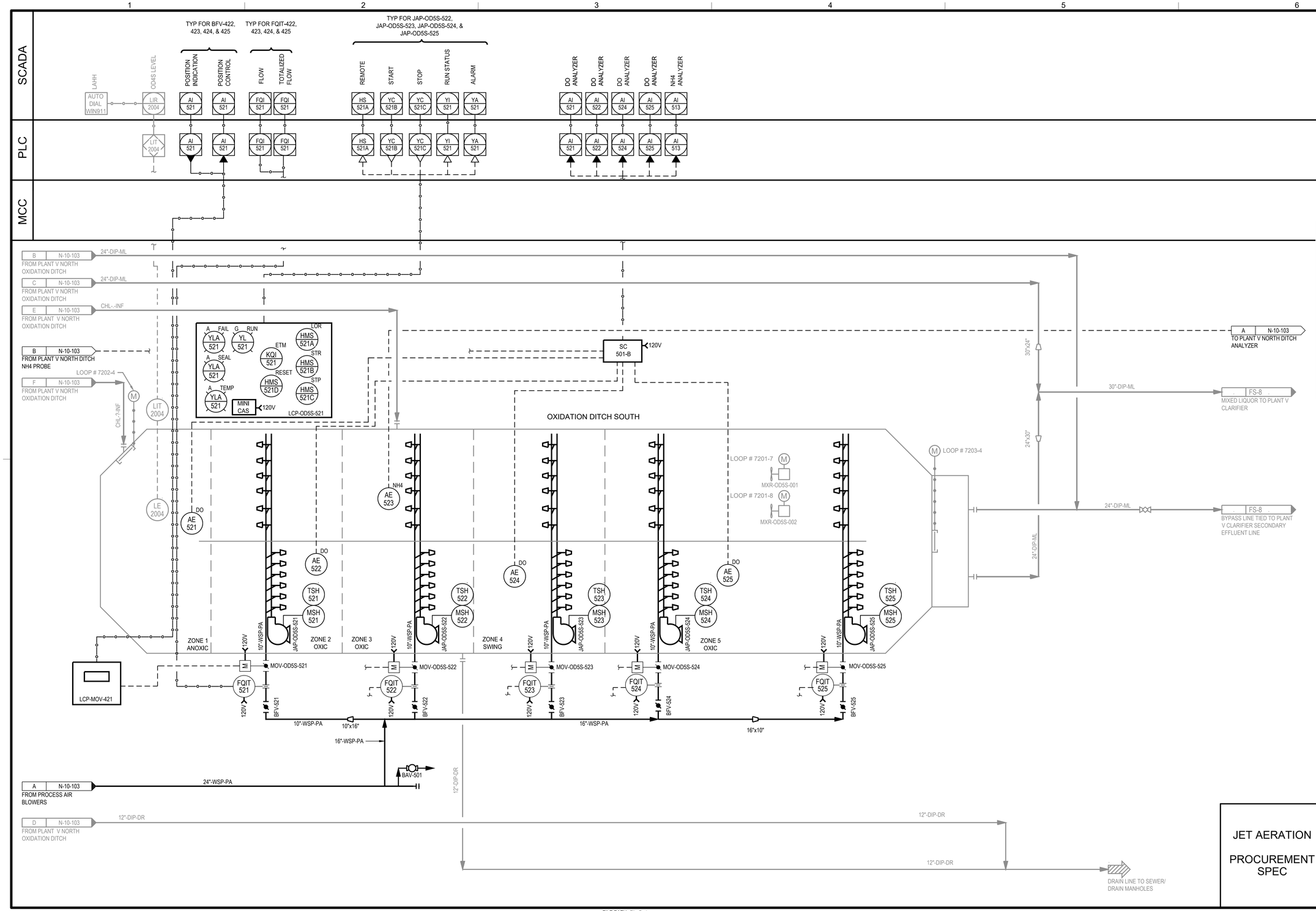

REUSE OF DOCUMENTS: THIS DOCUMENT, AND THE IDEAS AND DESIGN INCORPORATED HEREIN, AS AN INSTRUMENT OF PROFESSIONAL SEVICE, IS THE PROPERTY OF WATER WORKS ENGINEERS, LLC. AND IS NOT TO BE USED, IN WHOLE OR PART, FOR ANY OTHER PROJECT WITHOUT THE WRITTEN AUTHORIZATION OE WATER WORKS ENGINEERS,LLC.

FILE PATH: File Path

DATE AND TIME: 10/11/2013 3:33:16 PM

FELIX CONSTRUCTION

SPA-1 Capacity Enhancements

SURPRISE ARIZONA

Cost Model Development

Engineer: Waterworks Engineers

			% Plans	Pre 30%		Plan Date	TBD			
						Date of Est.	10/26/22			
#	Area	Priority	Description	Quant	Unit	Unit Price	Total price			Comments
2.00			**DIVISION 2 - SITEWORK**							
2.01			Demoliton / Removals / Salvage	1	LS	$ 611,525.44	$ 611,525			
2.02			Site Paving	1	LS	$ 236,596.00	$ 236,596			
2.03			Site Finishes (Ground Cover)	1	LS	$ 185,827.30	$ 185,827			
2.04			Private Locator Subcontractor	1	LS	$ 49,580.40	$ 49,580			
2.05			Headworks Bypass	1	LS	$ 262,813.76	$ 262,814			
2.06			Recharge Basin Earthwork	1	LS	$ 192,431.90	$ 192,432			
2.07			Reclaim BPS Settling Correction	1	LS	$ 250,000.00	$ 250,000			
			Subtotal				**$ 1,788,775**			
3.00			**DIVISION 3 - CONCRETE**							
3.01			Disinfection Building SOG	1	LS	$ 705,079.91	$ 705,080			
3.02			Blower Building	1	LS	$ 239,772.44	$ 239,772			
			Subtotal				**$ 944,852**			
5.00			**DIVISION 5 - METALS**							
5.01			Fabricated Metal Walkway	1	LS	$ 171,387.52	$ 171,388			
			Subtotal				**$ 171,388**			
6.00			**DIVISION 6 - WOODS AND PLASTICS**							
6.01			Chemical Building Complete (less concrete)	4920	sf	$ 250.00	$ 1,230,000			
6.01			Blower Building (Less Concrete)	3816	sf	$ 250.00	$ 954,000			
			Subtotal				**$ 2,184,000**			
9.00			**DIVISION 9 - FINISHES**							
9.01			Disinfection	1792	sf	$ 80.00	$ 143,360			
9.02			Blower	1	ls	$ 50,000.00	$ 50,000			
9.03			Screening Box Structural Rehab	1350	sf	$ 150.00	$ 202,500			
9.04			Screening Box Sewer Coating	1350	sf	$ 80.00	$ 108,000			
9.05			Plant 4 & 5 AG Piping	1	ls	$ 100,000.00	$ 100,000			
9.06			Effluent PS	1	ls	$ 30,000.00	$ 30,000			
			Subtotal				**$ 633,860**			
10.00			**DIVISION 10 - SPECIALTIES**							
10.01			Project & Emergency Signs	1	LS	$ 4,245.16	$ 4,245			
10.02			Site Info, Warning & Hazardous Signs	1	LS	$ 7,040.00	$ 7,040			
			Subtotal				**$ 11,285**			
11.00			**DIVISION 11 - EQUIPMENT**							
11.01			Jet Aeration	20	EA	$ 337,066.91	$ 6,741,338			
			Subtotal				**$ 6,741,338**			
12.00			**DIVISION 12 - FURNISHINGS**							
12.01				0	LS	$ -	$ -			
			Subtotal				**$ -**			
13.00			**DIVISION 13 - SPECIAL CONSTRUCTION**							
13.01			Disinfection Equipment (pumps, tanks, etc.)	1	LS	$ 553,382.86	$ 553,383			
13.02			Blowers	4	EA	$ 379,093.44	$ 1,516,374			
			Subtotal				**$ 2,069,757**			
14.00			**DIVISION 14 - CONVEYING SYSTEMS**							
14.01			Overhead Crane	1	LS	$ 150,000.00	$ 150,000			
			Subtotal				**$ 150,000**			
15.00			**DIVISION 15 - MECHANICAL**							
			Underground Pipe Systems			$ -	$ -			
15.01			Disinfection Underground Piping	2000	LS	$ 229.98	$ 459,958			
15.02			Blower UG Piping	500	LF	$ 2,181.56	$ 1,090,782			
15.03			24" DIP Filter Line	750	LF	$ 636.37	$ 477,281			
			Above Ground Pipe Systems			$ -	$ -			
15.30			Jet Aeration AG Piping	1	LS	$ 289,234.40	$ 289,234			
15.31			Blower AG Piping	1	LS	$ 499,234.40	$ 499,234			
			Subtotal				**$ 2,816,489**			
16.00			**DIVISION 16 - ELECTRICAL**							
16.01			Disinfection Electrical	1	LS	$ 2,200,000.00	$ 2,200,000			
16.02			Blower	1	LS	$ 2,700,000.00	$ 2,700,000			
16.03			Effluent Settling	1	LS	$ 300,000.00	$ 300,000			
16.04			Ductbank Installation (Civil)	1	LS	$ 185,848.25	$ 185,848			
			Subtotal				**$ 5,385,848**			
1.00			**DIVISION 1 - GENERAL REQUIREMENTS**							
1.10	GEN	GEN	Mobilization/Demobilization	1	LS	$ 8,000.00	$ 8,000			Mob/De-Mob Equipment
1.20	GEN	GEN	Permits & Environmental Controls	1	LS	$ 97,716.67	$ 97,717			Dust & SWPPP Permits & BMP's
1.30	GEN	GEN	Temporary Facilities	1	LS	$ 117,000.00	$ 117,000			J-Johns, Trailers, Dumpster
1.40	GEN	GEN	Temporary Controls	1	LS	$ 58,105.59	$ 58,106			Const Water, Temp Fence, Security Cost
1.50	GEN	GEN	Engineering / Testing	1	LS	$ 79,000.00	$ 79,000			Surveying, Mat'l Testing, NACE
1.60	GEN	GEN	Site Support	1	LS	$ 135,869.97	$ 135,870			Small Tools, Safety Supplies
1.80	GEN	GEN	Project Close-Out	1	LS	$ 20,903.20	$ 20,903			As-Builts, Final Clean Up
1.90	GEN	GEN	Misc / Other (Start-Up / Commissioning))	1	LS	$ 32,503.20	$ 32,503			Misc / Other (Start-Up / Commissioning))
			Subtotal				**$ 549,099**			
			SUBTOTAL DIVISONS 1-17 ABOVE				**$ 23,446,691**			
PROJECT TEAM (CONSTRUCTION)										
			Project Superintendent (including pick-up)	5196.00	MH	$ 105.43	**$ 547,814**			
			Project Manager (including pick-up)	5196.00	MH	$ 109.00	**$ 566,364**			
			Project Engineer (including pick-up)	10392.00	MH	$ 84.00	**$ 872,928**			
			Administrative	2598.00	MH	$ 45.00	**$ 116,910**			
			Subtotal Project Team (Construction)				**$ 2,104,016**			
FEE, BOND, INSURANCE AND TAXES										
			Support & Nondirect Site Expenses	5.00%		$ 25,550,707.21	$ 1,277,535			
			Construction Fee	10.00%		$ 25,550,707.21	$ 2,555,071			
			Insurance	0.80%		$ 29,383,313.29	$ 235,067			
			Payment & Performance Bonds	0.78%		$ 31,559,756.21	$ 248,950			
			Taxes	6.50%		$ 29,867,329.41	$ 1,941,376			
			Subtotal Fee, Bond, Tax				**$ 6,257,999**			
			GRAND TOTAL				**$ 31,808,706**			
CONTINGENCIES										
			Project Contingency	10.00	%	$ 31,808,705.82	**$ 3,180,871**			
			CONTINGENCIES				**$ 3,180,871**			
			GRAND TOTAL WITH CONTINGENCIES				**$ 34,989,576**			

City of Surprise Procurement Summary

SURPRISE
ARIZONA

Department:	WRM
Procurement Method:	CMAR
IFB/RFP/Contract #:	322191
REQ #	TBD

Background:
The Water Management Department, provided the Procurement Division with a scope of work for the SPA 1 Capacity Enhancement. A Construction Manager @Risk (CMAR) would be used to obtain Statements of Qualifications from qualified firms to complete the project.

Process:
The Procurement Division published the CMAR solicitation on 3/31/2022 and 4/07/2022 in the AZ Business Gazette and the City of Surprise website. A pre-submittal meeting and site visit was completed on 4/21/2022 and Questions were due by 04/28/2022, with submittals due by 05/05/2022 at 11:00 am. The CMAR included evaluation criteria that would be used to evaluate all of the SOQ's. Three SOQ's were received by the due date. The sealed submittal packages were publicly opened on the submittal due date and the tabulation of proposals received was posted to the website. No proposals were received after the 11:00 am solicitation deadline. The evaluation committee reviewed all responsive proposal based on the established evaluation criteria. The evaluation committee scored and ranked the proposal and determined that 3 firms would be shortlisted and invited for interviews. After interviews were conducted, score sheets were submitted and Felix Construction was selected for award.

Selection and Justification:
The Department Representative requests an award to the highest scoring/ranked firm, which is Felix construction.

Recommendation:
The Procurement Division recommends the award to the highest ranked firm based on the scoring.

	Felix	Archer Western	PCL
Total Points	108.57	94.43	90.57
	1	2	3

Authority:
Under the City of Surprise Code, Section 2-338, (c): City manager. The city manager shall:

1) Be the awarding authority, or delegate awarding authority to the purchasing manager for procurements when the cost to the city is $50,000.00 or less in any one transaction;
    a. Establish procurement guidelines for required levels of competition, further delegation of awarding authority below $50,000.00, and other procedures or methods necessary to carry out the intent of the procurement code.
2) Be the awarding authority, or delegate awarding authority to the purchasing manager for budgeted line items specifically identifying one-time operational or recurring products or services approved by the city council in the review and adoption of the annual budget of the city and for which an award is within the allocated expenditure. At the discretion of the city manager, the award of an IFB or RFP may be submitted for the approval of the city council. Awards that exceed the allocated expenditure or deviate from the identified description and/or scope shall require city council approval.
3) Review the results of all formal competitive bid and proposal solicitations for which the city council is the awarding authority and make recommendations to the city council;
4) Recommend to the city council additions, deletions or modification to this article.
5) Reserve the right to waive the requirements of this article when there has been a written determination that the procedures outlined in the code would not be likely to result in a lower price to the city, would cause unnecessary expense or delay under the circumstances, or would be in the best interests of the city.

Yvonne Perez

Yvonne Perez, Senior Buyer

City of Surprise
Procurement
Wendy Springborn, Procurement Manager
16000 N Civic Center Plaza, Surprise, AZ 85374

EVALUATION TABULATION

RFQu No. 322191

SPA 1 Capacity Enhancement CMAR

RESPONSE DEADLINE: May 5, 2022 at 11:00 am

Report Generated: Monday, October 31, 2022

SELECTED VENDOR

VENDOR AWARDED BY THE EVALUATION PROCESS

Vendor	Location
Felix Construction Company	Phoenix, AZ

VENDOR QUESTIONNAIRE PASS/FAIL

Question Title	Archer Western Construction, LLC	Arrowhead Superior Refrigeration Se	EAST VALLEY DISASTER SERVICES	Felix Construction Company	Flying Squirrel Enterprises, Inc dba System4 of Phoenix	Marshall Best Security Corporation	PCL	QCM Technologies, Inc.
Offer and Acceptance	Pass	No Response	No Response	Pass	No Response	No Response	Pass	No Response
Offer and Acceptance	Pass	No Response	No Response	Pass	No Response	No Response	Pass	No Response
Past Performance Verification	Pass	No Response	No Response	Pass	No Response	No Response	Pass	No Response
Proposal Response		No Response	No Response	Pass	No Response	No Response	Pass	No Response
Affidavit of Non-Collusion	Pass	No Response	No Response	Pass	No Response	No Response	Pass	No Response

Question Title	Archer Western Construction, LLC	Arrowhead Superior Refrigeration Se	EAST VALLEY DISASTER SERVICES	Felix Construction Company	Flying Squirrel Enterprises, Inc dba System4 of Phoenix	Marshall Best Security Corporation	PCL	QCM Technologies, Inc.
Immigration Warranty	Pass	No Response	No Response	Pass	No Response	No Response	Pass	No Response
Certificate of Insurability	Pass	No Response	No Response	Pass	No Response	No Response	Pass	No Response
License Requirements		No Response	No Response	Pass	No Response	No Response	Pass	No Response
License Requirement - Upload	Pass	No Response	No Response	Pass	No Response	No Response	Pass	No Response
MBWE	Pass	No Response	No Response	Pass	No Response	No Response	Pass	No Response
MWBE Documentation	No Response	No Response	No Response	No Response	No Response	No Response	No Response	No Response
Local Vendor	Pass	No Response	No Response	Pass	No Response	No Response	Pass	No Response
COMPLIANCE WITH A.R.S. § 35-393 .01 CONFIRMATION	Pass	No Response	No Response	Pass	No Response	No Response	Pass	No Response
COMPLIANCE WITH A.R.S. § 35-393 .01	Pass	No Response	No Response	Pass	No Response	No Response	Pass	No Response
Vendor W9	Pass	No Response	No Response	Pass	No Response	No Response	Pass	No Response

PHASE 2

EVALUATORS

Name	Title	Agreement Accepted On
Maris Adams	SCADA Automation Manager	May 16, 2022 8:48 AM
Reynaldo Aldava	Wastewater Manager	May 9, 2022 4:35 PM
JAYSON CHESHIRE	WASTEWATER SUPERVISOR	May 16, 2022 6:23 AM
james crean	Senior Client Services Manager	May 9, 2022 1:08 PM
Lee Lambert	Director	May 9, 2022 10:29 AM
Armando Lopez	CI P Manager	May 11, 2022 8:26 PM
Ken Snow	Wastewater Manager - Town of Gilbert	May 16, 2022 12:32 PM

EVALUATION CRITERIA

Criteria	Description	Scoring Method	Weight (Points)
Interview Question 1	1. Please share with the panel your firm's approach to the following pre-construction activities: a. Conducting constructability and Value-Analysis reviews. b. Estimating techniques to ensure the scope and budget requirements are met. c. Securing subcontractors and ensuring competitive pricing in the current construction market.	Points Based	10 *(8.3% of Total)*

Criteria	Description	Scoring Method	Weight (Points)
Interview Question 2	2. Please share with the panel a recent project where the initial construction estimate was over the targeted budget and how you worked with the owner to achieve the budget requirements.	Points Based	10 *(8.3% of Total)*
Interview Question 3	3. What actions would you take if a project is falling behind schedule or exceeding budget?	Points Based	10 *(8.3% of Total)*
Interview Question 4	4. Please share with the panel your firm's approach and experience with the following: a. Working at a secure facility. b. Working at a facility that houses critical infrastructure. c. Working at a facility that must maintain operations 24 hours a day, 365 days a year.	Points Based	10 *(8.3% of Total)*
Interview Question 5	5. Please discuss your firm's plan for site logistics during the construction phase to include: a. Site access for : your team, subs, receipt of equipment, placement of equipment, etc. b. Site communication c. Site coordination of construction	Points Based	10 *(8.3% of Total)*

Criteria	Description	Scoring Method	Weight (Points)
Interview Question 6	6. After reviewing the City's proposal for this project expansion, what do you see as the major challenges and how would you address them? Please be specific.	Points Based	10 *(8.3% of Total)*
Interview Question 7	7. This project is scheduled to last several years. With the labor market as it is, how would you structure a team for this project?	Points Based	10 *(8.3% of Total)*
Interview Question 8	8. The project includes substantial electrical improvements requiring close coordination with the plant operation. The electrical upgrades and modifications could require multiple shutdowns of existing MCCs to disconnect the existing aerators and connect the proposed mixing pumps and aeration blowers. This work will require close coordination with plant staff and thorough planning to develop the required MOPO plans and approval prior to performing the work. Additionally, the plant cannot be taken out of service and work hours may be limited to low flow periods and possibly night work. Given the activities described, please explain how you intend to prepare for them during the pre-construction phase.	Points Based	10 *(8.3% of Total)*

Criteria	Description	Scoring Method	Weight (Points)
Interview Question 9	9. Provide a recommendation whether the electrical subcontractor should or should not be part of the CMAR preconstruction phase services.	Points Based	10 *(8.3% of Total)*
Interview Question 10	10. Please explain your experience with Water Infrastructure Finance Authority (WIFA) funding. Explain how you maintained compliance with all rules and guidelines and ensured timely and accurate pay request submittals.	Points Based	10 *(8.3% of Total)*
Interview Question 11	11. How would you handle a surprise OSHA inspection that occurred as a result of a sub-contractor employee complaint?	Points Based	10 *(8.3% of Total)*
Interview Question 12	12. There are several qualified construction companies interested in this project, what sets you apart from the rest?	Points Based	10 *(8.3% of Total)*

AGGREGATE SCORES SUMMARY

Vendor	Maris Adams	Reynaldo Aldava	JAYSON CHESHIRE	james crean	Lee Lambert	Armando Lopez	Ken Snow	Total Score (Max Score 120)
Archer Western Construction, LLC	113	93	80	100	87	94	94	**94.43**

Vendor	Maris Adams	Reynaldo Aldava	JAYSON CHESHIRE	james crean	Lee Lambert	Armando Lopez	Ken Snow	Total Score (Max Score 120)
Felix Construction Company	116	108	95	112	118	107	104	**108.57**
PCL	111	86	76	101	74	95	91	**90.57**

VENDOR SCORES BY EVALUATION CRITERIA

Vendor	Interview Question 1 Points Based 10 Points (8.3%)	Interview Question 2 Points Based 10 Points (8.3%)	Interview Question 3 Points Based 10 Points (8.3%)	Interview Question 4 Points Based 10 Points (8.3%)	Interview Question 5 Points Based 10 Points (8.3%)	Interview Question 6 Points Based 10 Points (8.3%)	Interview Question 7 Points Based 10 Points (8.3%)	Interview Question 8 Points Based 10 Points (8.3%)	Interview Question 9 Points Based 10 Points (8.3%)	Interview Question 10 Points Based 10 Points (8.3%)
Archer Western Construction, LLC	7.9	7.6	7.6	7.9	7.7	7.9	8.4	7.6	8.3	8.3
Felix Construction Company	9.1	9.1	8.4	9.1	8.9	9.4	9.1	9.6	9.1	9.1
PCL	8.3	8.3	6.4	7.9	6.9	7.1	7.3	6.3	7.6	8.3

Vendor	Interview Question 11 Points Based 10 Points (8.3%)	Interview Question 12 Points Based 10 Points (8.3%)	Total Score (Max Score 120)
Archer Western Construction, LLC	7.9	7.6	**94.43**
Felix Construction Company	8	9.4	**108.57**
PCL	9	7.3	**90.57**

PHASE 1

EVALUATORS

Name	Title	Agreement Accepted On
Maris Adams	SCADA Automation Manager	May 16, 2022 8:48 AM
Reynaldo Aldava	Wastewater Manager	May 9, 2022 4:35 PM
JAYSON CHESHIRE	WASTEWATER SUPERVISOR	May 16, 2022 6:23 AM
james crean	Senior Client Services Manager	May 9, 2022 1:08 PM
Lee Lambert	Director	May 9, 2022 10:29 AM
Armando Lopez	CIP Project Manager	May 11, 2022 8:26 PM
Ken Snow	Wastewater Manager - Town of Gilbert	May 16, 2022 12:32 PM

EVALUATION CRITERIA

Criteria	Description	Scoring Method	Weight (Points)

General Information	Provide a general description of the firm / team that is proposing to provide the pre-construction services and general construction services described herein. Explain the legal organization of the proposed firm or team. Provide an organization chart showing key personnel. List the names of the key persons who will be providing the services describing the services each will provide. Provide the following information: List the Arizona professional and contractor licenses held by the firm and/or individuals who will be assigned to this project. Provide the license numbers and expiration dates, if applicable. The Proposer need not be licensed, but the person or firm actually performing construction services on behalf of the Proposer must be currently, and have been for at least one year immediately prior, a licensed general contractor in the State of Arizona. Identify any contract or subcontract held by the firm or officers of the firm, which has been terminated within the last five years. Identify any claims arising from a contract which resulted a formal claim being filed with a public entity pursuant to A.R.S. 12-821.01 or has resulted in litigation or arbitration	Points Based	5 *(5% of Total)*

Criteria	Description	Scoring Method	Weight (Points)
	within the last five years. Briefly describe the circumstances and the outcomes. Provide a statement from an AM Best, Inc. rating of A or better surety company of the Company's bonding capacity. Unless otherwise required by the public records law, this information will be confidential and will not be made part of the public record. This statement shall be submitted with the SOQ packet in a separate sealed envelope, marked "CONFIDENTIAL". The outside of this sealed envelope should identify the firm and the project.		

Experience of the Team	Experience of the Team: Identify at least three comparable projects in which the firm served as either Construction Manager at Risk, agency Construction Manager during design and construction phases (with or without providing construction services), and/or General Contractor; explain any over-runs. For each comparable project identified, provide: Description of project. Role of the firm (specify whether Construction Manager at Risk, Construction Manager or General Contractor). If CM at Risk or General Contractor, identify the percent of work self-performed. Also specify services provided during design phase, (cost of estimating, scheduling, value engineering, etc.) Project's original contracted construction cost and final construction cost; explain any over-runs. Construction dates. Project Owner. Reference information (two names with telephone numbers per project).	Points Based	20 *(20% of Total)*

Criteria	Description	Scoring Method	Weight (Points)
	Identify the location of the firm's principal office, and percent of the work expected to be done locally. List of all the City of Surprise projects where the firm/team provided either design services, agency construction management or general construction services in the last five years either completed or ongoing. Submit copies of a Critical Path Method (CPM), Construction Progress Schedule (both the baseline schedule and the final completed schedule) for a previous similar project. (These will not be counted towards the page limit)		

Criteria	Description	Scoring Method	Weight (Points)
Key Personnel Experience	For each key person identified, list at least two comparable projects in which they have played a primary role. If a project selected for a key person is the same as one selected for the firm, provide just the project name and role of the key person. For other projects provide: Description of project. Role of the person and length of employment with the Firm. Project's original contracted construction cost and final construction cost; explain any over-runs. Construction dates. Project Owner. Reference information (two names with telephone numbers per project). Identify the home office location of key staff on this project, their length of time with the firm, and the percent of their work expected to be done locally. List any proposed consultants, including key staff names and the experience and qualifications of these individuals.	Points Based	20 *(20% of Total)*

Criteria	Description	Scoring Method	Weight (Points)
Project Understanding & Approach	Describe your firm's project management and delivery approach and team organization during pre-construction and construction phase services. Discuss the major issues your team has identified on this project and how you intend to address those issues. Discuss how your team will accommodate executing the construction phase services on an active wastewater plant. Describe systems used for planning, scheduling, estimating and managing construction. Briefly describe the firm's experience on quality control, dispute resolution, and safety management.	Points Based	30 *(30% of Total)*

Criteria	Description	Scoring Method	Weight (Points)
Subcontractor Selection Plan	Responses shall include the firm's proposed subcontractor selection plan. The proposed subcontractor selection plan must provide for the selection of subcontractors based on qualifications alone or on a combination of qualifications and price and shall not select subcontractors based on price alone. Please include a detailed description of how the firm intends to select the electrical subcontractor and include them in the pre-construction phase services	Points Based	15 *(15% of Total)*
Past Performance	Past Performance Verification will be included in this evaluation criteria (Appendix B1 & B2). Offeror will be awarded points for both submission and evaluation of the PPVF forms. See section 10 of the instructions for details.	Points Based	10 *(10% of Total)*

AGGREGATE SCORES SUMMARY

Vendor	Maris Adams	Reynaldo Aldava	JAYSON CHESHIRE	james crean	Lee Lambert	Armando Lopez	Ken Snow	Total Score (Max Score 100)
Archer Western Construction, LLC	94	88	96	83	93	88	87	**89.86**

Vendor	Maris Adams	Reynaldo Aldava	JAYSON CHESHIRE	james crean	Lee Lambert	Armando Lopez	Ken Snow	Total Score (Max Score 100)
Felix Construction Company	97	98	96	93	99	91	93	**95.29**
PCL	95	81	86	84	84	91	88	**87**

VENDOR SCORES BY EVALUATION CRITERIA

Vendor	General Information Points Based 5 Points (5%)	Experience of the Team Points Based 20 Points (20%)	Key Personnel Experience Points Based 20 Points (20%)	Project Understanding & Approach Points Based 30 Points (30%)	Subcontractor Selection Plan Points Based 15 Points (15%)	Past Performance Points Based 10 Points (10%)	Total Score (Max Score 100)
Archer Western Construction, LLC	4.3	18.4	18.4	27	13.9	7.9	**89.86**
Felix Construction Company	4.9	19.3	19	28.4	13.7	10	**95.29**
PCL	4.9	17.7	16.9	24.4	14	9.1	**87**

Legal Capability Addendum – Gov

1. Date of Debt Authorization – or Expected Date of Authorization:

May 2, 2023.

2. Enclose the applicable debt authorization materials with the application:

☐ **Voter Authorized**
- ☐ Official Election Resolution
- ☐ Official Election Ballot
- ☐ Official Publicity Pamphlet, if applicable
- ☐ Certified Canvas of Election Results

☐ **Special Districts**
- ☐ Resolution of Intention
- ☐ Official Petition
- ☐ Roster of Petitioners
- ☐ Summary of Assessment Proceedings
- ☐ Related Documents

- ☐ Official Election Resolution
- ☐ Official Election Ballot
- ☐ Official Publicity Pamphlet, if applicable
- ☐ Certified Canvas of Election Results

☒ **Governmental Entity** meeting the population requirement under A.R.S. § 9-571
- ☒ Official Debt Authorization Resolution, which includes a certification of population

Place holder for Official Debt Authorization Resolution

Financial Capability Addendum-Gov2

Financial Capability is the capability of the system to acquire and manage sufficient financial resources to maintain compliance with lending requirements, regulatory concerns, managerial concerns, and with technical requirements.

1. Source of Repayment: Wastewater rate fees and fund balance

2. Enclose the Financial Statements and/or Annual Reports for the current year and previous three years.

FY2022 Annual audit is in process. Loaded unaudited Proprietary Funds Statement of Net Position and Statement of Revenues, Expenses, and Changes in Net Position.

File name: Fin Capability 2_FY2022 Prop Funds Fin Statements For the Year End 06302022.pdf

FY2021 Annual Comprehensive Financial Report

FY2020 Annual Comprehensive Financial Report

All ACFR

3. Was a Single Audit report issued for any of the previous three years? *If "Yes", copies of each report in question must be submitted.*
All Single Audit Reports

FY2022 Single Audit Report is in process (Will submit when complete)

FY2021 Single Audit Report

FY2020 Single Audit Report

FY2019 Single Audit Report

4. Enclose the following Monthly Financial Data for the Source of Repayment:

Monthly Revenue Data for the most recent 12 months.
File name: 12 month revenue_10262022
Monthly Operating Expenditure Data for the most recent 12 months.

File name : 12 month expenditures_10262022

5. Explain if any unusual, atypical or one-time expenses were incurred in the past five years that impacted the net operating revenues of the system:

The fund incurred one-time cost related to capital improvement projects.

6. Enclose the following operating budgets:

Current fiscal year budget. FY2023 Adopted Budget Book

Proposed or approved budget for the next fiscal year. Still working on proposed

7. Enclose the Rate Ordinance. Explain if a rate increase is planned or was recently approved to cover the costs of the additional debt? *(Please note that if new rates are necessary to meet the debt service coverage, the rate structure must be approved prior to action of the WIFA Board)*

Attach rate ordinance that allows us to collect user fees.
File Name: Surprise, AZ Municipal Code_Chapter 58 Utilities.pdf (Article II.-FESS, CHARGES AND SERVICE APPLICATIONS)

A rate increase will not be necessary to cover the costs of the additional debt.

8. Summarize what action is taken against delinquent ratepayers? Are other measures legally available?

The City's delinquency process is as follows:
1. A delinquent account is subject to having its services disconnected. A Notice of Pending Termination of Service will be mailed to the mailing address of the customer no less than 10 days prior to the disconnection of water service, and no less than 7 days prior to the discontinuance of trash service.

2. For customers whose water service is provided by a third party, but whose wastewater services are provided and billed by the City, notification will be provided no less than 10 days prior to the disconnection of water service.

3. If entire past due amount is not paid, or a payment arrangement is not entered into by the due date indicated in the Notice of Pending Termination, water services are subject to disconnection without further notice, and the sanitation services will be stopped. The entire amount of the customer's City utility bill must be paid before services will be restored.

4. The City will immediately terminate services and may pursue any and all legal action against any person who negligently or willfully breaks, damages, destroys, defaces, or tampers with any part of the water delivery system or wastewater collection system while in a delinquent status.

9. Enclose copies of loan agreements, official statements and any other documentation for any indebtedness payable by the same Source of Repayment detailed in item one above.

File Name: (OS with Erratum)Surprise (City of), AZ Senior Lien Utility Sys Rev Ref Obligations, Srs 2018 OS.pdf

10. Is the applicant now or at any time in the past 10 years been in default as to principal, interest, or any other requirement on any debt obligation? Yes No *If "Yes", describe the circumstances leading to the default and describe the status of the default.*

No

11. Have any agreements or legal proceeding relating to any debt obligation been declared invalid or unenforceable? Yes No *If "Yes", describe the circumstances leading to the declaration and describe the status of the invalid or unenforceable agreement or legal proceeding.*

No

12. Desired Loan Term:

(Please note the loan term cannot exceed 30 years or the useful life of the funded infrastructure)

30 years

20 years

Other:

CERTIFICATE OF INSURANCE

ISSUE DATE
7/13/2022

ADMINISTRATOR

Southwest Risk Services
14902 North 73rd Street
Scottsdale, AZ 85260
(602) 996-8810

THIS CERTIFICATE IS ISSUED AS A MATTER OF INFORMATION ONLY AND CONFERS NO RIGHTS UPON THE CERTIFICATE HOLDER. THIS CERTIFICATE DOES NOT AMEND, EXTEND OR ALTER THE COVERAGE AFFORDED BY THE POLICIES BELOW.

COMPANIES AFFORDING COVERAGE

INSURED

City of Surprise
16000 N Civic Center Plaza

Surprise, Arizona 85374

COMPANY LETTER A	ARIZONA MUNICIPAL RISK RETENTION POOL
COMPANY LETTER B	
COMPANY LETTER C	
COMPANY LETTER D	

COVERAGES

THIS IS TO CERTIFY THAT POLICIES OF INSURANCE LISTED BELOW HAVE BEEN ISSUED TO THE INSURED NAMED ABOVE FOR THE POLICY PERIOD INDICATED, NOT WITHSTANDING ANY REQUIREMENT, TERM OR CONDITION OF ANY CONTRACT OR OTHER DOCUMENT WITH RESPECT TO WHICH THIS CERTIFICATE MAY BE ISSUED OR PERTAIN, THE INSURANCE AFFORDED BY THE POLICES DESCRIBED HERE IN IS SUBJECT TO ALL THE TERMS, EXCLUSIONS, AND CONDITIONS OF SUCH POLICIES.

CO LTR	TYPE OF INSURANCE	POLICY NUMBER	POLICY EFFECTIVE DATE (MM/DD/YY)	POLICY EXPIRATION DATE	LIMITS	
A	GENERAL LIABILITY X COMMERCIAL GENERAL LIABILITY X CLAIMS MADE OCCURRENCE	2000178-6	7/1/2022	7/1/2023	EACH WRONGFUL ACT PROD COMP/OPS AGGR GENERAL AGGREGATE PERSONAL & ADV INJURY FIRE DAMAGE(1 FIRE) MEDICAL EXP(1 PERSON)	$2,000,000 $2,000,000 $6,000,000 $2,000,000 $300,000 $5,000
A	AUTOMOBILE LIABILITY X ANY AUTO	2000178-6	7/1/2022	7/1/2023	COMBINED SINGLE LIMIT	$2,000,000
A	EXCESS LIABILITY	2000179-6	7/1/2022	7/1/2023	EACH WRONGFUL ACT AGGREGATE	$13,000,000 $13,000,000
A	WORKERS' COMPENSATION AND EMPLOYERS' LIABILITY				 (EACH ACCIDENT) (DISEASE-POL LMT) (DISEASE-EACH EMP)	STATUTORY $1,000,000 $1,000,000 $1,000,000
A	OTHER Property	2000178-6	7/1/2022	7/1/2023		$394,009,960.00

DESCRIPTION OF OPERATIONS/LOCATIONS/VEHICLES/SPECIAL ITEMS

Evidence of Insurance

CERTIFICATE HOLDER

Water Infrastructure Finance Authority of Arizona.
100 N 7th Ave Ste 130

Phoenix, Arizona 85007

CANCELLATION

SHOULD ANY OF THE ABOVE DESCRIBED POLICIES BE CANCELLED BEFORE THE EXPIRATION DATE THEREOF, THE ISSUING COMPANY WILL ENDEAVOR TO MAIL 30 DAYS WRITTEN NOTICE TO THE CERTIFICATE HOLDER NAMED TO THE LEFT BUT FAILURE TO MAIL SUCH NOTICE SHALL IMPOSE NO OBLIGATION OR LIABILITY OF ANY KIND UPON THE COMPANY, ITS AGENTS OR REPRESENTATIVES.

AUTHORIZED SIGNATURE

Edward a Bartel

Technical Capability Addendum

Technical Capability is the ability of system personnel to implement and utilize the past, present, and future technology of the system in compliance with all regulatory and infrastructure design requirements. Technical Capability measures the ability of system personnel to identify and correct problems with infrastructure, operations, and maintenance.

1. Service Area

A. Describe facility service area:

The City of Surprise Water Resource Management Department services the City of Surprise, a growing community located in the northwest corner of the Greater Phoenix area. Founded in 1938, Surprise has seen remarkable growth in the past 20 years as the city's population has ballooned from around 40,000 residents in 2002 to nearly 150,000 today. In order to maintain a high level of service to the current and future population, the city has been divided up into six separate special planning areas (SPA). The bulk of the current population is located in SPA-1, which covers more than 27,000 acres. Within this area, there is a great variety of commercial and residential customers, including approximately 90,000 residents, as well as several hundred, retail, restaurant, industrial, and manufacturing clients. This multitude of consumers is serviced in SPA-1 by the South Surprise Wastewater Reclamation Facility which is responsible for taking in nearly 9 million gallons per day (GPD) on average of wastewater, reconditioning it, and distributing it to the city's effluent customers or putting it back into the ground. As Surprise continues to grow and see accelerated development within SPA-1, projections show that the South Surprise Facility will double the current average of 8.7 million gallons per day serviced in the near future.

Physical address of project: 13663 W Cactus Road, Surprise, Az 85379
Latitude/Longitude of project (decimal degrees): 33.59221, -112.35376
Name of receiving waterbody*: No AZPDES
Watershed of project**: City of Surprise-Agua Fria River (150701020906)
Hydrologic Unit Code (HUC) of project**: 15070102

* Receiving waterbody information can be found on the cover page of the AZPDES permit.
** to find your Watershed and HUC, enter the zip code for the area or other geographic information at http://cfpub.epa.gov/surf/locate/index.cfm. After submitting the information, the HUC is the eight digit number after the name of the watershed at the top of the page.

B. Population Information

Population Information	Present	Projected
Project Population (# of people project serves directly)	**132,929**	**169,277**
Facility Population (# of people connected to permitted facility in its entirety)	**45,838**	**58,371**

C. Number of Connections

Type of Connection	Current	Prior Year	2 Years Prior	3 Years Prior	4 Years Prior

Residential	**66,062**	**62,953**	**60,142**	**57,174**	**55,881**
Commercial	**719**	**700**	**720**	**691**	**651**
Industrial	**31**	**28**	**17**	**16**	**15**
Other	**103**	**101**	**65**	**61**	**65**
Total	**66,915**	**63,782**	**60,944**	**57,942**	**56,612**

2. Current Facilities

A. Flow Information

Capacity/Usage	Present	Projected
Average Daily	8.7 MGD	15.7
Peak Daily	32 MGD (Design Peak Factor for an hour= 2.5)	40.75 (Design Peak Factor for an hour= 2.5)
Design Capacity	12.8 MGD (Actual Capacity)	16.3 MGD

B. Is the system in compliance with Local, State, and Federal health and environmental requirements? ☒ Yes ☐ No *If "No," what actions are being taken to achieve compliance?*

C. Unit Process Data/Best Management Practices: provide information pertaining to all applicable facilities.

Unit Process	Present	Projected	Backup	Change?	Planned Year
Primary Treatment	N/A				
Secondary Treatment	YES				
Advanced Treatment	N/A				
Disinfection	YES			YES	2024
Solids Handling	YES				
UV Radiation	N/A				
Gravity Septic & Leach Field	N/A				

D. Describe the current discharge method and location proposed by the project.
Currently SPA1 WRF has two methods of discharge. The primary method of effluent discharge is to 20 vadose zone injection wells. We also have approximately 24 square acres of percolation basins. Due to fouling of the injection wells SPA1 WRF has relied more so on percolation basins to reclaim effluent. Due to the ease of

maintenance and robust nature the project proposes another percolation basin in the location of the current vadose wells. Size to be determined.
- Direct Injection- Vadose Wells 33.592743, -112.351877
- Percolation- Ponds 33.589097, -112.357115

E. Is the discharge seasonal? ☐ Yes ☒ No *If "Yes," Please explain and provided pertinent documentation.*

3. Project Improvement/Maintenance of Water Quality.

To be considered as "improve water quality," a project must reduce pollutant loading to the receiving water body. A project that simply sustains the treatment capacity of a facility is classified as "maintain water quality."

A. Please check all that apply

Project will allow the system to:

☒ Improve water quality ☒ Maintain water quality ☐ Not applicable
☐ Achieve compliance ☒ Maintain compliance
☒ Address existing TMDLs ☐ Address proposed TMDLs
☐ Address Watershed Management Plan

Note: Designated uses and TMDL information are found in ADEQ's 305b List and Report.

B. Affected Waterbodies:

Waterbody ID Type	Name	HUC or NHD	Receiving Waterbody?
Primary Impacted	NA (No NPDES)		
Other Impacted			

4. System Employees - Name the key personnel with day-to-day operational responsibility.

Name	Title	Certification Grade	Total Years Experience	Time in Position
Armin Hadzic	Lead Operator	4	12	8
Jorge Gurrola	Lead Operator	4	7	2
Carl Hanson	Senior Operator	2	7	2
Kaleb Cassens	Senior Operator	3	3	1
Jerome Yontz	Senior Operator	2	7	1
Paul Goltz	Operator	1	3	3
Roy Romero	Operator	1	1	1
Quinton Lyons	Operator-Trainee		1	1
Salvador Dominguez	Lead Mechanic		22	1
Elio Lemus	Senior Mechanic		5	2
Lupe Gonzales	Senior Mechanic		23	10
Jaden Sobarzo	Mechanic		3	2
Juan Longoria	Mechanic		1	1
Ricardo Lopez	Mechanic		2	1
Alex Soto	Service Worker		1	1

5. Operation and Technical Impact:

Please explain any significant operating or technical impacts as the result of the proposed technology.

Currently the SPA1 wastewater facility is not able to fully treat the incoming wastewater. We are managing and able to maintain in compliance but as flows continue to increase, we will start to have exceedances due to lack of ability to treat. In addition, it will cost us more to maintain the facility with the equipment we currently have due to constant breakdowns. Upgrades are necessary to give us adequate treatment and control to have the ability to fully and efficiently treat the wastewater. Upgrades include but are not limited to the plant aeration system and disinfection/electrical building at source/dosing location.

In the order of flow starting at headworks the concrete will be rehabilitated and coated to add many more years of service to this structure. A header will be added to better hydraulic flows through the fine screens. This will prevent settling of grit and allow for equal operation of all three fine screens. Two of the current five plants will have their surface aerators removed and replaced with more efficient sub surface jet aeration. Jets provide sub surface aeration with less moving parts creating a more robust system while simultaneously decreasing maintenance and energy costs. With the addition of jet aeration there is a need for a new blower building. This building will house five new blowers providing excellent redundancy and process flexibility. In addition, more controls will be added to allow operations the means to take full advantage of the efficiencies that jet aeration and inverter rated blower motors will provide. With the added treatment capacity will be a need for added effluent capacity. Secondary effluent pipping to tertiary filtration will be added. A new disinfection building will be constructed along with new equipment and revamped plumbing for chlorine distribution and increased sampling accuracy. The new disinfection building will serve double duty and house a new MCC room for electrical runs from the existing effluent pumps. The area around the existing electrical runs is prone to sinking. Therefore, with the relocation of these runs will add reliability and stability to this area. Poor compaction verified by a third party engineer is the cause of the sinking in and around this area. The resulting subsidence will be remedied during this latest expansion phase. Lastly, a third recharge basin will be constructed to replace the existing well field. The well field is beyond its useful life and thus will not handle the added treatment capacity. A recharge basin in lieu of additional wells for ease of operation and maintenance has been decided upon.

6. What is the anticipated life expectancy of the funded infrastructure? 30 years

7. Average Annual Operation and Maintenance Costs as Applicable to this Project

Category	Current Cost ($)	Projected Cost ($)
Operations	5,614,100	5,614,100
Maintenance	619,400	394,400
Chemicals	631,000	631,000
Replacement(s)	3,013,700	3,013,700
Utilities	1,890,000	1,890,000

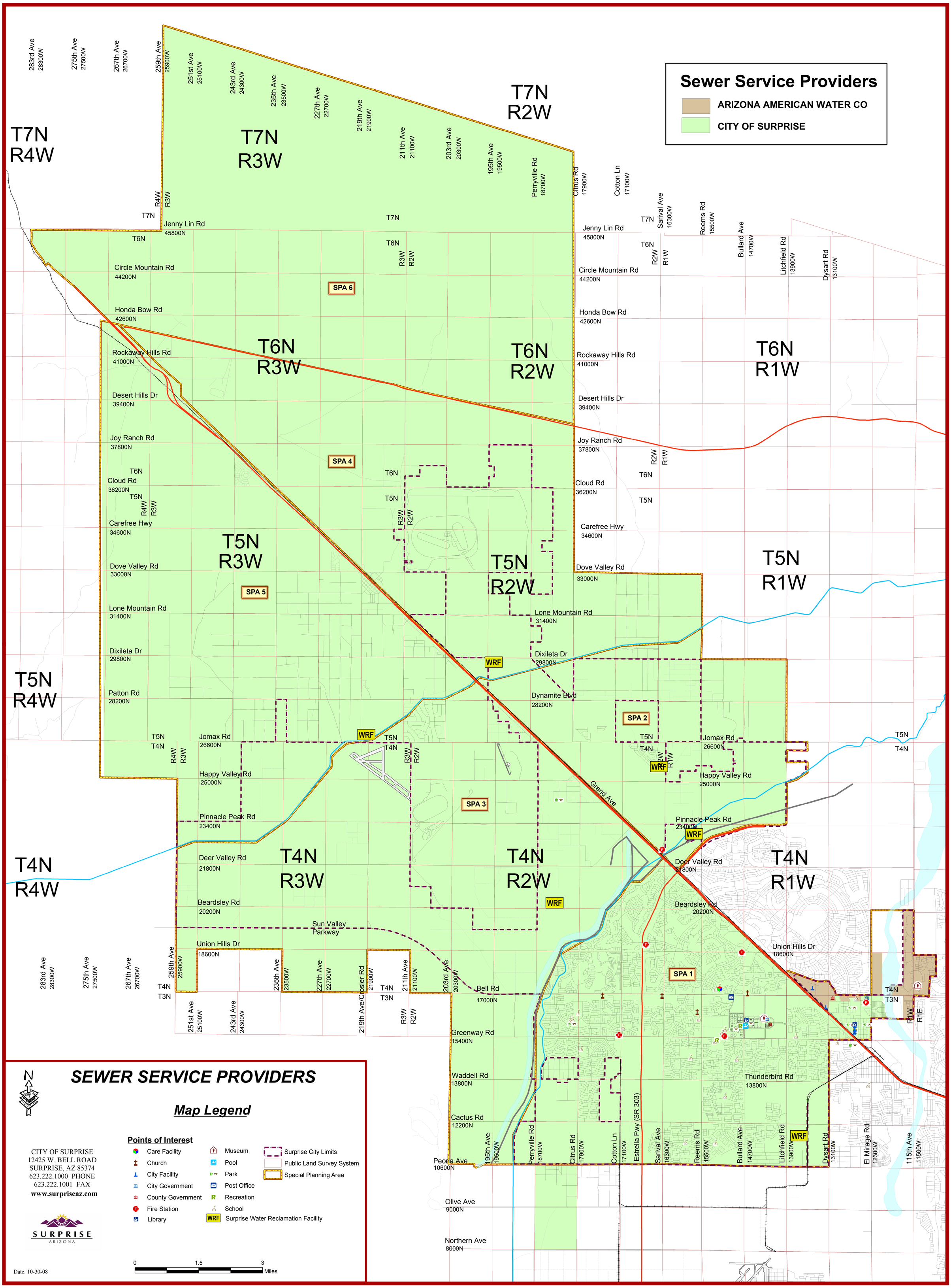
Sewer Service Providers
ARIZONA AMERICAN WATER CO
CITY OF SURPRISE
T7N R4W
T7N R3W
T7N R2W
T7N R1W
T6N R3W
T6N R2W
T6N R1W
T5N R4W
T5N R3W
T5N R2W
T5N R1W
T4N R4W
T4N R3W
T4N R2W
T4N R1W
T5N R4W
T5N R3W
T5N R2W
T5N R1W
T4N R4W
T4N R3W
T4N R2W
T4N R1W
283rd Ave 28300W
275th Ave 27500W
267th Ave 26700W
259th Ave 25900W
251st Ave 25100W
243rd Ave 24300W
235th Ave 23500W
227th Ave 22700W
219th Ave 21900W
211th Ave 21100W
203rd Ave 20300W
195th Ave 19500W
Perryville Rd 18700W
Citrus Rd 17900W
Cotton Ln 17100W
Sarival Ave 16300W
Reems Rd 15500W
Bullard Ave 14700W
Litchfield Rd 13900W
Dysart Rd 13100W
El Mirage Rd 12300W
115th Ave 11500W
Jenny Lin Rd 45800N
Circle Mountain Rd 44200N
Honda Bow Rd 42600N
Rockaway Hills Rd 41000N
Desert Hills Dr 39400N
Joy Ranch Rd 37800N
Cloud Rd 36200N
Carefree Hwy 34600N
Dove Valley Rd 33000N
Lone Mountain Rd 31400N
Dixileta Dr 29800N
Patton Rd 28200N
Dynamite Blvd 28200N
Jomax Rd 26600N
Happy Valley Rd 25000N
Pinnacle Peak Rd 23400N
Deer Valley Rd 21800N
Beardsley Rd 20200N
Sun Valley Parkway
Union Hills Dr 18600N
Bell Rd 17000N
Greenway Rd 15400N
Waddell Rd 13800N
Thunderbird Rd 13800N
Cactus Rd 12200N
Peoria Ave 10600N
Olive Ave 9000N
Northern Ave 8000N
Grand Ave
SPA 1
SPA 2
SPA 3
SPA 4
SPA 5
SPA 6
WRF
SEWER SERVICE PROVIDERS
Map Legend
Points of Interest
Care Facility
Church
City Facility
City Government
County Government
Fire Station
Library
Museum
Pool
Park
Post Office
Recreation
School
Surprise Water Reclamation Facility
Surprise City Limits
Public Land Survey System
Special Planning Area
CITY OF SURPRISE
12425 W. BELL ROAD
SURPRISE, AZ 85374
623.222.1000 PHONE
623.222.1001 FAX
www.surpriseaz.com
SURPRISE
ARIZONA
Date: 10-30-08
0
1.5
3
Miles

Managerial Capability Addendum

Managerial Capability represents the ability of the management structure of the system to conduct its affairs in a manner, which enables the system to maintain compliance with all regulatory and infrastructure design requirements. Managerial Capability depends on staffing, organization, accountability, legal policy, administration, and effective linkages.

1. **Does the organization have by-laws (private organizations), rate ordinances, and connection ordinances in place?**
   - ☐ By-laws
   - ☒ Rate ordinances
   - ☒ Connection ordinances

   Please submit a copy for each checked box.

2. **Does the organization have an established accounting/bookkeeping system?**
   ☒ Yes ☐ No

   Please explain your current accounting/bookkeeping system.

   The City of Surprise utilizes generally accepted accounting principles (GAAP) and numerous policies and procedures to ensure compliance with state and federal guidelines and laws.

3. **Are the terms of the officers of the organization (company board or elected officials) staggered?**
   ☒ Yes ☐ No ☐ N/A

   If No or N/A, please explain below.

4. **Has any past or present officer of the organization been recalled or is any recall action pending?** ☐ Yes ☒ No

   If Yes, please explain below.

5. **Who will manage the proposed design or construction project?**
   - ☒ System manager
   - ☐ Officer of the organization
   - ☐ Other: (Explain)

   Please explain their role and experience.

   The City of Surprise Wastewater Manager and Supervisor, along with the City's Capital Improvement Project Manager will manage the proposed design and construction. The Wastewater leadership staff is the project owner and will ensure that the design meets the intent of the department's needs. They will also coordinate with the construction contractor on a daily basis to ensure that there are no plant disruptions. The Capital Improvement Project Manager will provide technical assistance and oversite of the design and construction process and ensure compliance with all regulatory agencies.

6. **Does the individual who will manage the project have experience in managing similar design or construction projects?**
   ☒ Yes ☐ No
   If Yes, describe experience below. If No, explain intended actions to mitigate this lack of experience.
   The project management team has over 30 years of combined experience in similar wastewater treatment projects.

7. **Who oversees day-to-day management of the system?**
   ☒ System manager
   ☐ Officer of the organization
   ☐ Other: (Explain)

8. **Does the individual with day-to-day management responsibility have experience in managing this or similar systems?**
   ☒ Yes ☐ No
   If Yes, describe experience below. If No, explain intended actions to mitigate this lack of experience.

   The day to day management of the City's wastewater system is the responsibility of one manager and two supervisors. These gentleman have significant experience with the City of Surprise system.

9. **Will there be significant management impacts as the result of the proposed design or construction project or any technology associated with the project?** (For example: additional costs or staffing requirements)
   ☐ Yes ☒ No
   Explain response below.

   No staffing or management changes are expected due to the proposed project and associated technology.

10. **Is there any current or past litigation?**
    ☐ Yes ☒ No
    If Yes, is there an actual or potential managerial impact on the applicant because of this litigation?
    ☐ Yes ☐ No
    Explain response below.

ARTICLE II. FEES, CHARGES AND SERVICE APPLICATIONS[1]

DIVISION 1. GENERALLY

Sec. 58-22. Debt to city.

Every charge, rental or fee levied for utility services shall become, from and after the time it is due and payable, a personal debt of the utility user and may be collected by a lien or civil action instituted in the name of the city, upon the request of the city manager. Notwithstanding any other provision to the contrary, the remedy provided by this section shall cumulate and supplement other remedies.

(Ord. No. 2012-06, § 1, 5-8-2012)

Secs. 58-23—58-49. Reserved.

DIVISION 2. FEES

Sec. 58-50. Service fees and deposits.

Periodically, the city council will by resolution establish service fees and deposits for solid waste, water, wastewater and other public services.

(1) Utility rates shall be established to recover at least the cost of providing each utility service, including services ancillary to maintain adequate fund reserves for each utility to provide for reasonable expected variations in the cost of providing as well as the demand for such utility service.

(2) Deposits are required for all multi-family and commercial accounts; deposits may be required for single-family residential accounts.

(3) Customer accounts will be primarily billed on a monthly basis.

(4) Utility user accounts will be setup and billed for all applicable utility services.

(5) Failure to receive bills or notices which have been properly placed in the United States mail shall not prevent such bills from becoming delinquent nor relieve the customer of their obligations therein.

(Ord. No. 2012-06, § 1, 5-8-2012)

[1]State law reference(s)—Utility user fees, A.R.S. § 9-511.02.

Sec. 58-51. Fees.

Periodically, the city council will by resolution, or annual budgeting, establish administrative fees and fines for violations and noncompliance of all utility services including solid waste, recyclables, water, wastewater and other public services requirements.

(Ord. No. 2012-06, § 1, 5-8-2012)

Sec. 58-52. Annual prepayments.

Annual prepayments may be accepted for service.

(Ord. No. 2012-06, § 1, 5-8-2012)

Sec. 58-53. Adjustment of fees.

The city manager shall have the authority to grant an adjustment of solid waste, water, wastewater and other public services fees on a case-by-case basis.

(1) City utility customers who have been erroneously charged for services may receive an account adjustment to correct the error.

(2) City utility customers may be backbilled for errors or omissions on their utility billings.

(Ord. No. 2012-06, § 1, 5-8-2012)

Sec. 58-54. Deferred payment agreement.

(a) The city or its assigned agent may, prior to terminating service, grant qualifying customers a deferred payment agreement for the customer to pay unpaid bills for service.

(b) Each deferred payment agreement shall provide that service will not be discontinued.

(c) The repayment period for the agreement shall not be for a longer period than it took to incur the debt.

(d) Any customer who desires to enter into a deferred payment agreement shall establish such agreement prior to the city's scheduled termination date for nonpayment of bills. A customer's failure to execute a deferred payment agreement prior to the scheduled termination date will not prevent the city from terminating service for nonpayment.

(e) If a customer has not fulfilled the terms of a deferred payment agreement, the city shall have the right to disconnect service pursuant to the termination of service provision. Under the circumstances, the city shall not be required to offer subsequent negotiation of a deferred payment agreement prior to termination.

(Ord. No. 2012-06, § 1, 5-8-2012)

Sec. 58-55. Meter failure.

If a meter fails to operate or a reading cannot be taken due to interference, the bill for the month shall be estimated by the city based on past use or similar use. Continued meter failure may result in a citation.

(Ord. No. 2012-06, § 1, 5-8-2012)

Sec. 58-56. Meter interference.

If a meter cannot be read for three consecutive months due to blocked, covered, or obscured meter access by any repeated or continuing circumstance, including locked gates, property maintenance conditions, vicious animals, or any other condition or circumstance, disconnection of service may be executed and all associated reconnection fees and other related fees shall apply, as well as possible citation.

(Ord. No. 2012-06, § 1, 5-8-2012)

Sec. 58-57. Customer requested meter tests.

The city or its assigned agent shall test a meter upon the customer's request and shall be authorized to charge the customer for such meter test according to the rates approved by the city council. However, if the meter is found to over register by more than two percent, no meter testing fee will be charged to the customer.

Sec. 58-58. Meter reading.

All city water meters in the city's water service area will be read monthly.

(Ord. No. 2012-06, § 1, 5-8-2012)

Secs. 58-59—58-85. Reserved.

DIVISION 3. SERVICE APPLICATIONS

Sec. 58-86. Application; grounds for rejection; approval.

(a) An application for service shall be made to the city or its assigned agent and shall include the information necessary to initiate service.

(b) The application for service may be rejected for any good and sufficient reasons, including, but not limited to, the following:

  (1) Service is not available;

  (2) Service is not available under a standard rate;

  (3) Service involves excessive service expense;

  (4) Service may affect the service to other customers;

  (5) When the applicant is delinquent in the payment of services incurred from a previous property or location.

(c) Upon approval of the application for service, the applicant shall adhere to all requirements.

(Ord. No. 2012-06, § 1, 5-8-2012)

Sec. 58-87. Discontinuance of service by the customer.

(a) A customer who desires to discontinue service shall make notice in advance of the intended date for termination of service.

(b) Upon the sale and/or transfer of the title to the property receiving service, the customer shall make notice in advance of the intended date for termination of service.

(c) Until the customer notifies the city or its assigned agent, the account will remain open and the utility liability will continue to accrue.

(d) The customer can voluntarily discontinue wastewater service only if the customer discontinues all utility services to the property.

(Ord. No. 2012-06, § 1, 5-8-2012)

Sec. 58-88. Discontinuance of service by the city.

(a) The city may discontinue service for any of the following circumstances:

(1) To prevent fraud or abuse;

(2) Disregard of the City Code, resolutions, orders, administrative rules, or other related policies or procedures;

(3) Emergency repair;

(4) Factors outside the control of the city;

(5) Legal process;

(6) Direction of public authorities;

(7) Local emergency requiring emergency measures;

(8) Tampering with service or city-owned equipment by the customer;

(9) Failure to pay for service;

(10) Interference.

(b) At the time of discontinuance for solid waste service, the customer shall surrender the refuse container to the public works department.

(Ord. No. 2012-06, § 1, 5-8-2012)

Secs. 58-89—58-109. Reserved.

ARTICLE II. FEES, CHARGES AND SERVICE APPLICATIONS[1]

DIVISION 1. GENERALLY

Sec. 58-22. Debt to city.

Every charge, rental or fee levied for utility services shall become, from and after the time it is due and payable, a personal debt of the utility user and may be collected by a lien or civil action instituted in the name of the city, upon the request of the city manager. Notwithstanding any other provision to the contrary, the remedy provided by this section shall cumulate and supplement other remedies.

(Ord. No. 2012-06, § 1, 5-8-2012)

Secs. 58-23—58-49. Reserved.

DIVISION 2. FEES

Sec. 58-50. Service fees and deposits.

Periodically, the city council will by resolution establish service fees and deposits for solid waste, water, wastewater and other public services.

(1) Utility rates shall be established to recover at least the cost of providing each utility service, including services ancillary to maintain adequate fund reserves for each utility to provide for reasonable expected variations in the cost of providing as well as the demand for such utility service.

(2) Deposits are required for all multi-family and commercial accounts; deposits may be required for single-family residential accounts.

(3) Customer accounts will be primarily billed on a monthly basis.

(4) Utility user accounts will be setup and billed for all applicable utility services.

(5) Failure to receive bills or notices which have been properly placed in the United States mail shall not prevent such bills from becoming delinquent nor relieve the customer of their obligations therein.

(Ord. No. 2012-06, § 1, 5-8-2012)

[1]State law reference(s)—Utility user fees, A.R.S. § 9-511.02.

Sec. 58-51. Fees.

Periodically, the city council will by resolution, or annual budgeting, establish administrative fees and fines for violations and noncompliance of all utility services including solid waste, recyclables, water, wastewater and other public services requirements.

(Ord. No. 2012-06, § 1, 5-8-2012)

Sec. 58-52. Annual prepayments.

Annual prepayments may be accepted for service.

(Ord. No. 2012-06, § 1, 5-8-2012)

Sec. 58-53. Adjustment of fees.

The city manager shall have the authority to grant an adjustment of solid waste, water, wastewater and other public services fees on a case-by-case basis.

(1) City utility customers who have been erroneously charged for services may receive an account adjustment to correct the error.

(2) City utility customers may be backbilled for errors or omissions on their utility billings.

(Ord. No. 2012-06, § 1, 5-8-2012)

Sec. 58-54. Deferred payment agreement.

(a) The city or its assigned agent may, prior to terminating service, grant qualifying customers a deferred payment agreement for the customer to pay unpaid bills for service.

(b) Each deferred payment agreement shall provide that service will not be discontinued.

(c) The repayment period for the agreement shall not be for a longer period than it took to incur the debt.

(d) Any customer who desires to enter into a deferred payment agreement shall establish such agreement prior to the city's scheduled termination date for nonpayment of bills. A customer's failure to execute a deferred payment agreement prior to the scheduled termination date will not prevent the city from terminating service for nonpayment.

(e) If a customer has not fulfilled the terms of a deferred payment agreement, the city shall have the right to disconnect service pursuant to the termination of service provision. Under the circumstances, the city shall not be required to offer subsequent negotiation of a deferred payment agreement prior to termination.

(Ord. No. 2012-06, § 1, 5-8-2012)

Sec. 58-55. Meter failure.

If a meter fails to operate or a reading cannot be taken due to interference, the bill for the month shall be estimated by the city based on past use or similar use. Continued meter failure may result in a citation.

(Ord. No. 2012-06, § 1, 5-8-2012)

Sec. 58-56. Meter interference.

If a meter cannot be read for three consecutive months due to blocked, covered, or obscured meter access by any repeated or continuing circumstance, including locked gates, property maintenance conditions, vicious animals, or any other condition or circumstance, disconnection of service may be executed and all associated reconnection fees and other related fees shall apply, as well as possible citation.

(Ord. No. 2012-06, § 1, 5-8-2012)

Sec. 58-57. Customer requested meter tests.

The city or its assigned agent shall test a meter upon the customer's request and shall be authorized to charge the customer for such meter test according to the rates approved by the city council. However, if the meter is found to over register by more than two percent, no meter testing fee will be charged to the customer.

Sec. 58-58. Meter reading.

All city water meters in the city's water service area will be read monthly.

(Ord. No. 2012-06, § 1, 5-8-2012)

Secs. 58-59—58-85. Reserved.

DIVISION 3. SERVICE APPLICATIONS

Sec. 58-86. Application; grounds for rejection; approval.

(a) An application for service shall be made to the city or its assigned agent and shall include the information necessary to initiate service.

(b) The application for service may be rejected for any good and sufficient reasons, including, but not limited to, the following:

(1) Service is not available;

(2) Service is not available under a standard rate;

(3) Service involves excessive service expense;

(4) Service may affect the service to other customers;

(5) When the applicant is delinquent in the payment of services incurred from a previous property or location.

(c) Upon approval of the application for service, the applicant shall adhere to all requirements.

(Ord. No. 2012-06, § 1, 5-8-2012)

Sec. 58-87. Discontinuance of service by the customer.

(a) A customer who desires to discontinue service shall make notice in advance of the intended date for termination of service.

(b) Upon the sale and/or transfer of the title to the property receiving service, the customer shall make notice in advance of the intended date for termination of service.

(c) Until the customer notifies the city or its assigned agent, the account will remain open and the utility liability will continue to accrue.

(d) The customer can voluntarily discontinue wastewater service only if the customer discontinues all utility services to the property.

(Ord. No. 2012-06, § 1, 5-8-2012)

Sec. 58-88. Discontinuance of service by the city.

(a) The city may discontinue service for any of the following circumstances:

(1) To prevent fraud or abuse;

(2) Disregard of the City Code, resolutions, orders, administrative rules, or other related policies or procedures;

(3) Emergency repair;

(4) Factors outside the control of the city;

(5) Legal process;

(6) Direction of public authorities;

(7) Local emergency requiring emergency measures;

(8) Tampering with service or city-owned equipment by the customer;

(9) Failure to pay for service;

(10) Interference.

(b) At the time of discontinuance for solid waste service, the customer shall surrender the refuse container to the public works department.

(Ord. No. 2012-06, § 1, 5-8-2012)

Secs. 58-89—58-109. Reserved.

Community Description Addendum

1. **Describe the location of the Community/System:**

The City of Surprise Water Resource Management Department services the City of Surprise, a growing community located in the northwest corner of the Greater Phoenix area. Founded in 1938, Surprise has seen remarkable growth in the past 20 years as the city's population has ballooned from around 40,000 residents in 2002 to nearly 150,000 today. In order to maintain a high level of service to the current and future population, the city has been divided up into six separate special planning areas (SPA). The bulk of the current population is located in SPA-1, which covers more than 27,000 acres. Within this area, there is a great variety of commercial and residential customers, including approximately 90,000 residents, as well as several hundred, retail, restaurant, industrial, and manufacturing clients. This multitude of consumers is serviced in SPA-1 by the South Surprise Wastewater Reclamation Facility which is responsible for taking in nearly 9 million gallons per day (GPD) on average of wastewater, reconditioning it, and distributing it to the city's effluent customers or putting it back into the ground. As Surprise continues to grow and see accelerated development within SPA-1, projections show that the South Surprise Facility will double the current average of 8.7 million gallons per day serviced in the near future.

2. **Population of the Community (Served and Un-served):**

The South Surprise Wastewater Reclamation Facility has 60,537 sewer connections in SPA-1, providing this service to 100% of the area. Additionally, the facility has 36 reclaimed water connections, servicing 19 unique customers including manufacturing facilities, HOA's, retail locations, the local school district, and an award winning golf course.

3. **Describe the population demographics** (i.e. year-round retired, family, seasonal, etc.):

As a whole, the City of Surprise has nearly 150,000 residents today, with approximately 90,000 (60%) of these residing within SPA-1. The vast majority of these residents live in the city year-round, but the region does see a small increase in population during the winter months as seasonal residents move back into the area. Of the year round residents, Surprise is inhabited by many young families with a quarter (25%) of the city's population begin under the age of 18. Additionally, there is a significant portion of the city's population (23%) that are 65 years of age or older.

4. **Describe community attractions and features that relate to water/wastewater infrastructure projects:**

The South Surprise Wastewater Reclamation Facility processes the incoming wastewater at its facility and distributes this effluent to customers in the area. This reuse water is distributed to HOA's, golf courses, industrial manufacturers, and others in lieu of potable water. Using effluent for irrigation and manufacturing in this way is a more sustainable water model and eases the burden on the potable water system.

5. **Describe the principal economic activities and the principal employers of the area served:**

In the SPA-1 area of the City of Surprise there are several different economic activities that are served by the South Surprise Facility. The facility itself is located within the 2 square mile BNSF

certified foreign trade zone known as the Surprise Railplex. Within the Railplex there are currently over a dozen industrial, manufacturing, packaging and bottling facilities, with several more on the way. Two miles west is the Village at Prasada, a 700,000 square foot retail, restaurant, and entertainment district that is currently being completed. Once fully opened it will be the largest 'power center' opened in the western United States in the past decade. Overall the major industries in the SPA-1 area are retail/grocery, manufacturing, and healthcare, with some of the principal employers being Walmart, Fry's Grocery, and Banner Health.

6. **Is the service area where the project is occurring within a federally recognized Colonia?** If yes, please include the name of the Colonia.

No, the area is not a recognized Colonia.

Form **W-9**
(Rev. October 2018)
Department of the Treasury
Internal Revenue Service

Request for Taxpayer Identification Number and Certification

▶ **Go to *www.irs.gov/FormW9* for instructions and the latest information.**

Give Form to the requester. Do not send to the IRS.

Print or type. See Specific Instructions on page 3.

1 Name (as shown on your income tax return). Name is required on this line; do not leave this line blank.

City of Surprise

2 Business name/disregarded entity name, if different from above

3 Check appropriate box for federal tax classification of the person whose name is entered on line 1. Check only **one** of the following seven boxes.

☐ Individual/sole proprietor or single-member LLC ☐ C Corporation ☐ S Corporation ☐ Partnership ☐ Trust/estate

☐ Limited liability company. Enter the tax classification (C=C corporation, S=S corporation, P=Partnership) ▶ _____

Note: Check the appropriate box in the line above for the tax classification of the single-member owner. Do not check LLC if the LLC is classified as a single-member LLC that is disregarded from the owner unless the owner of the LLC is another LLC that is **not** disregarded from the owner for U.S. federal tax purposes. Otherwise, a single-member LLC that is disregarded from the owner should check the appropriate box for the tax classification of its owner.

☑ Other (see instructions) ▶ **Government Entity**

4 Exemptions (codes apply only to certain entities, not individuals; see instructions on page 3):

Exempt payee code (if any) _____

Exemption from FATCA reporting code (if any) _____

(Applies to accounts maintained outside the U.S.)

5 Address (number, street, and apt. or suite no.) See instructions.

16000 N. Civic Center Plaza

Requester's name and address (optional)

6 City, state, and ZIP code

Surprise, AZ 85374

7 List account number(s) here (optional)

Part I Taxpayer Identification Number (TIN)

Enter your TIN in the appropriate box. The TIN provided must match the name given on line 1 to avoid backup withholding. For individuals, this is generally your social security number (SSN). However, for a resident alien, sole proprietor, or disregarded entity, see the instructions for Part I, later. For other entities, it is your employer identification number (EIN). If you do not have a number, see *How to get a TIN,* later.

Note: If the account is in more than one name, see the instructions for line 1. Also see *What Name and Number To Give the Requester* for guidelines on whose number to enter.

Social security number

			–			–				

or

Employer identification number

8	6	–	6	0	0	7	7	9	6

Part II Certification

Under penalties of perjury, I certify that:

1. The number shown on this form is my correct taxpayer identification number (or I am waiting for a number to be issued to me); and
2. I am not subject to backup withholding because: (a) I am exempt from backup withholding, or (b) I have not been notified by the Internal Revenue Service (IRS) that I am subject to backup withholding as a result of a failure to report all interest or dividends, or (c) the IRS has notified me that I am no longer subject to backup withholding; and
3. I am a U.S. citizen or other U.S. person (defined below); and
4. The FATCA code(s) entered on this form (if any) indicating that I am exempt from FATCA reporting is correct.

Certification instructions. You must cross out item 2 above if you have been notified by the IRS that you are currently subject to backup withholding because you have failed to report all interest and dividends on your tax return. For real estate transactions, item 2 does not apply. For mortgage interest paid, acquisition or abandonment of secured property, cancellation of debt, contributions to an individual retirement arrangement (IRA), and generally, payments other than interest and dividends, you are not required to sign the certification, but you must provide your correct TIN. See the instructions for Part II, later.

Sign Here **Signature of U.S. person** ▶ Andrea Dais **Date** ▶ 2/8/2022

General Instructions

Section references are to the Internal Revenue Code unless otherwise noted.

Future developments. For the latest information about developments related to Form W-9 and its instructions, such as legislation enacted after they were published, go to *www.irs.gov/FormW9.*

Purpose of Form

An individual or entity (Form W-9 requester) who is required to file an information return with the IRS must obtain your correct taxpayer identification number (TIN) which may be your social security number (SSN), individual taxpayer identification number (ITIN), adoption taxpayer identification number (ATIN), or employer identification number (EIN), to report on an information return the amount paid to you, or other amount reportable on an information return. Examples of information returns include, but are not limited to, the following.

- Form 1099-INT (interest earned or paid)
- Form 1099-DIV (dividends, including those from stocks or mutual funds)
- Form 1099-MISC (various types of income, prizes, awards, or gross proceeds)
- Form 1099-B (stock or mutual fund sales and certain other transactions by brokers)
- Form 1099-S (proceeds from real estate transactions)
- Form 1099-K (merchant card and third party network transactions)
- Form 1098 (home mortgage interest), 1098-E (student loan interest), 1098-T (tuition)
- Form 1099-C (canceled debt)
- Form 1099-A (acquisition or abandonment of secured property)

Use Form W-9 only if you are a U.S. person (including a resident alien), to provide your correct TIN.

If you do not return Form W-9 to the requester with a TIN, you might be subject to backup withholding. See What is backup withholding, *later.*

WATER INFRASTRUCTURE FINANCE AUTHORITY OF ARIZONA
Attachment A to Fact Sheet – Fair Share Policy

CERTIFICATION OF POSITIVE EFFORT
Disadvantaged Business Enterprise (DBE) Program

Name of Borrower: City of Surprise

Project Number CW 018-2022 Estimated Loan Amount $35M

Project Title: SPA 1 Plant Capacity and Enhancement Project

City of Surprise has made or will make a good faith effort to facilitate Disadvantaged Business Enterprise (DBE) Program participation in this construction contract by satisfactorily following the affirmative action steps:

1. Ensure DBEs are made aware of contracting opportunities to the fullest extent practicable through outreach and recruitment activities; including placing DBEs on solicitation lists and soliciting them whenever they are potential sources.
2. Make information on forthcoming opportunities available to DBEs and arrange time frames for contracts and establish delivery schedules, where the requirements permit, in a way that encourages and facilitates participation by DBEs in the competitive process. This includes, whenever possible, posting solicitation for bids or proposals for a minimum of 30 calendar days before the bid or proposal closing date.
3. Consider in the contracting process whether firms competing for large contracts could be subcontracted with DBEs. This will include dividing total requirements when economically feasible into smaller tasks or quantities to permit maximum participation by DBEs in the competitive process.
4. Encourage contracting with a consortium of DBEs when a contract is too large for one of these firms to handle individually.
5. Use the services and assistance of the Small Business Administration and the Minority Business Development Agency of the U. S. Department of Commerce.
6. If the prime contractor awards subcontracts, require the prime contractor to take the steps in numbers 1 through 5 above.

City of Surprise shall maintain documentation related to DBE good faith effort, contractor selection, and DBE participation, in the project files and make it available upon request.

Note: Please list the selected contractors and/or sub-contractors on the reverse side of this form.

I, the undersigned representative of City of Surprise hereby certify that all information provided herein is correct to the best of my knowledge and belief.

Michael Boule Digitally signed by Michael Boule DN: C=US, E=michael.boule@surpriseaz.gov, O="Surprise, Arizona", OU="Water Resource Management ", CN=Michael Boule Reason: WIFA DBE Date: 2022.07.13 15:45:38-07'00' 07/13/2022

(Signature of Authorized Representative) (Date)

Michael Boule, Assistant Director- Water Resource Management

(Type or Print Name of Authorized Representative)

The following contractors and/or sub-contractors have been selected to provide services for the project listed:

Felix Construction Company

_____
(Contractor Name)

_____DBE
(Contractor Name)

_____DBE
(Contractor Name)

_____DBE
(Contractor Name)

_____DBE
(Contractor Name)

_____DBE
(Contractor Name)

_____DBE
(Contractor Name)

_____DBE
(Contractor Name)

_____DBE
(Contractor Name)

_____DBE
(Contractor Name)

_____DBE
(Contractor Name)

_____DBE
(Contractor Name)

_____DBE
(Contractor Name)

_____DBE
(Contractor Name)

_____DBE
(Contractor Name)

_____DBE
(Contractor Name)

_____DBE
(Contractor Name)

_____DBE
(Contractor Name)

_____DBE
(Contractor Name)

Appendix B (cont.) to Procedure D.003.1

My Company Profile

Company Information

Company Name
City of Surprise

Doing Business As (DBA) Name

Company ID
38441

Enrollment Date
Jan 09, 2007

Employer Identification Number (EIN)
866007796

Unique Entity Identifier (UEI)

DUNS Number

Total Number of Employees
500 to 999

NAICS Code
921190

Sector

Subsector
Other General Government Support

WATER INFRASTRUCTURE FINANCE AUTHORITY OF ARIZONA

Fiscal Sustainability Plan Certification

Name of Borrower: City of Surprise

Project Number: CW 018-2022

Project Title: SPA 1 Plant Capacity Increase and Enhancements

In accordance with Section 603(d)(1)(E) of the federal Clean Water Act, a loan recipient must develop and implement a fiscal sustainability plan or certify that it has developed and implemented such a plan.

603(d)(1)(E) for a treatment works proposed for repair, replacement, or expansion, and eligible for assistance under subsection (c)(1), the recipient of a loan shall:

- *i. develop and implement a fiscal sustainability plan that includes—*
  - *I. an inventory of critical assets that are a part of the treatment works;*
  - *II. an evaluation of the condition and performance of inventoried assets or asset groupings;*
  - *III. a certification that the recipient has evaluated and will be implementing water and energy conservation efforts as part of the plan; and*
  - *IV. a plan for maintaining, repairing, and, as necessary, replacing the treatment works and a plan for funding such activities; or*
- *ii. certify that the recipient has developed and implemented a plan that meets the requirements under clause (i).*

Please check one of the boxes below and sign and date this form:

☒ As the authorized representative of City of Surprise, I certify that City of Surprise has developed and implemented a fiscal sustainability plan that meets the requirements of Section 603(d)(1)(E) of the Clean Water Act.

☐ As the authorized representative of City of Surprise, I understand that City of Surprise shall develop and implement a fiscal sustainability plan, and will certify the plan meets the requirements under Section 603(d)(1)(E)(i) of the Clean Water Act. The certification must be signed and submitted with the fiscal sustainability plan to WIFA before 50% of funds associated with repair/replacement/expansion have been drawn.

☐ As the authorized representative of City of Surprise, I certify that the project does not involve the repair, replacement or expansion of a treatment works and, therefore, does not require development of a fiscal sustainability plan.

I understand that WIFA will rely on this signed certification to approve the funding and that false or inaccurate representations in this certification may result in the loss of all funds awarded to the borrower for its project. Additionally, WIFA may withhold disbursement of project funds and/or pursue any other applicable legal remedy.

Michael Boule	Assistant Director- Water Resource Management
Name of Authorized Representative (Please print)	Title
Michael Boule — Digitally signed by Michael Boule DN: C=US, E=michael.boule@surpriseaz.gov, O="Surprise, Arizona", OU="Water Resource Management ", CN=Michael Boule Reason: WIFA FSP Date: 2022.07.13 15:24:04-07'00'	07/13/2022
Signature of Authorized Representative	Date

Revised 3/2015

WATER INFRASTRUCTURE FINANCE AUTHORITY OF ARIZONA

Cost and Effectiveness Certification

Name of Borrower: City of Surprise

Project Number: CW 018-2022

Project Title: SPA 1 Plant Capacity Increase and Enhancements

As a condition for receiving assistance through the Arizona Clean Water State Revolving Fund, I certify that per Section 602(b)(13) of the Water Resources Reform and Development Act of 2014 (WRRDA), City of Surprise

A) Has studied and evaluated the cost and effectiveness of the processes, materials, techniques, and technologies for carrying out the proposed project or activity for which assistance is sought under this title; and

B) Has selected, to the maximum extent practicable, a project or activity that maximizes the potential for efficient water use, reuse, recapture, and conservation, and energy conservation, taking into account –
   i. The cost of constructing the project or activity;
   ii. The cost of operating and maintaining the project or activity over the life of the project or activity; and
   iii. The cost of replacing the project or activity.

Michael Boule	Assistant Director
Name of Authorized Representative (Please print)	Title
Michael Boule Digitally signed by Michael Boule DN: C=US, E=michael.boule@surpriseaz.gov, O="Surprise, Arizona", OU="Water Resource Management ", CN=Michael Boule Reason: WIFA Form Date: 2022.07.13 15:28:03-07'00'	7/13/2022
Signature of Authorized Representative	Date

Certification of Licensed Professional Engineer

I hereby certify that this engineering document was prepared by me or under my direct personal supervision and that I am a duly licensed Professional Engineer under the laws of the State of Arizona.

John Matta	3/31/2023
Name of Licensed Professional Engineer (Please print)	License Number and Expiration Date
	7/13/2022
Signature of Licensed Professional Engineer	Date

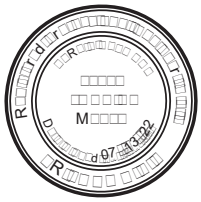

Pages or sheets covered by this seal:

125

Revised 1/2016

WATER INFRASTRUCTURE FINANCE AUTHORITY OF ARIZONA and STATE HISTORIC PRESERVATION OFFICE
Cultural Resources Review Form

In accordance with the State Historic Preservation Act, (the State Act), A.R.S. 41-861 *et seq.*, the Water Infrastructure Finance Authority of Arizona (WIFA), a state agency, must consider the potential of activities or projects to impact significant cultural resources. WIFA provides projects with federal funds received from the Environmental Protection Agency, thereby making projects federal undertakings subject to review under Section 106 of the National Historic Preservation Act (as amended). Therefore, it is understood that *recipients of state and federal funds are required to comply with these laws* throughout the project period.

All ground disturbing (both surface and subsurface) projects that are funded by WIFA with state or federal monies, *including those on private, state, and federal or Tribal lands,* require consultation with the State Historic Preservation Office (SHPO) under the State Act or Section 106, as appropriate. SHPO assists state and federal agencies in the identification, documentation, and evaluation of historic properties and helps to resolve potential impacts to such properties. Projects using federal funds or on federal land may also require tribal consultation by the appropriate federal agency.

SHPO must review each loan application recommended for funding in order to determine the effect, if any, a proposed project may have on significant cultural resources. "Cultural resources" include prehistoric and historic archaeological sites, buildings, structures, districts and objects. A cultural resource is "significant" if it is important to the history, architecture, archaeology, engineering, or culture of a community, state, or nation. Significant prehistoric and historic cultural resources that are listed or eligible for listing in the Arizona Register of Historic Places or the National Register of Historic places are called "historic properties."

To assist SHPO in this review, the following information MUST be submitted with each application for funding:

- ☐ A completed copy of this form; **AND**
- ☐ A map showing the project area boundaries; **AND**
- ☐ If on non-private land, a copy of the land managing agency (i.e., federal, state, county, municipal, tribal) correspondence or consultation on potential impacts of the project on historic properties, if any; **AND**
- ☐ If a cultural resources survey or inventory report of the property has been conducted, include a copy, or include a copy of SHPO comments if the survey report has already been reviewed by SHPO.

Please answer the following questions:

1. WIFA Project Number (from PPL e-application): CW 018-2022

2. Project Title: SPA 1 Plant Capacity Increase and Enhancements

3. Applicant Name and Address: City of Surprise, 13663 W Cactus Rd, Surprise, Az 85379

4. Current Land Owner/Manager(s): City of Surprise

5. Project Location, including County and Township, Range, Section: Maricopa County, S/T/R = 22 3N 1W

6. Total Project Area in acres (or total miles if linear project): 50 Acres

7. Does the proposed project have the potential to disturb the surface and/or subsurface of the ground? ☒ YES ☐ NO

8. Provide a brief description of the proposed project and specifically identify any surface or subsurface impacts that are expected; include surface area dimensions and depth:

   The proposed project will provide treatment plant efficiency and capacity through the addition of an advanced aeration system, new recharge basins and modifications to the existing headworks. Please refer to the Project Data Addendum and 30% plans for more information. The surface and subsurface impacts are anticipated to be minimal due to much of the construction modifying existing structures and equipment. Trenching and excavation are expected to be between 3 and 5 feet, and these activities will occur on previously disturbed areas of the City's property.

9. Are there any public health or safety concerns associated with the undertaking?
   ☐ YES ☒ NO

   If YES, describe: _____

10. Describe the condition of the current ground surface within the entire project boundary area (for example, is the ground in a natural undisturbed condition, or has it been bladed, paved, graded, etc.). Estimate horizontal and vertical extent of existing disturbance. Also, attach photographs of project area to document condition (Note: photos are not necessary if the land is undisturbed):

    All surfaces associated with the project have been disturbed through various plant projects/expansions. Please see phot of project area in the Project Data Addendum.

11. Are there any known prehistoric and/or historic archaeological sites in or near the project area? ☐ YES ☒ NO ☐ UNKNOWN

12. Has the project area been previously surveyed for cultural resources by a qualified archaeologist? ☐ YES ☐ NO ☒ UNKNOWN

If YES, submit a copy of the survey report. Please attach any comments on the survey report made by the land managing agency and/or SHPO.

13. Are there any buildings or structures (including mines, bridges, dams, canals, etc.), which are historic (i.e., 50-years or older) in or adjacent to the project area?
☐ YES ☒ NO ☐ UNKNOWN

If YES, complete the Arizona Historic Property Inventory Form for each building or structure and submit it with your application.
https://azstateparks.com/national-register-forms

14. Is your project area within or near a historic district? ☐ YES ☒ NO ☐ UNKNOWN

If YES, name of the district: _____

Please sign on the line below certifying all information provided for this application is accurate to the best of your knowledge.

Michael Boule Digitally signed by Michael Boule DN: C=US, E=michael.boule@surpriseaz.gov, O="Surprise, Arizona", OU="Water Resource Management", CN=Michael Boule Reason: SHPO WIFA FORM Date: 2023.01.03 11:04:48-07'00' / 01/03/2023

Applicant Signature /Date

Michael Boule
Applicant Printed Name

FOR SHPO USE ONLY
SHPO Finding: ☐ No Historic Properties Affected *(loan funds will not affect historic properties)* ☐ No Adverse Effect *(loan funds will not adversely affect historic properties)* ☐ More Information Requested (see SHPO comments); continued WIFA and/or land manager consultation with SHPO is required (*loan will not be executed until consultation has been completed*) ☐ Adverse Effect (see SHPO comments); continued WIFA and/or land manager consultation with SHPO is required (*loan will not be executed until consultation has been completed*)

SHPO COMMENTS:
SHPO Signature and Date:

SAM.GOV®

Transitioning to the New Unique Entity ID (SAM)

Are you ready for the April 4, 2022 transition from the DUNS Number to the Unique Entity Identifier (SAM) in SAM.gov?

Today Both DUNS and Unique Entity ID (SAM) appear in SAM.gov and other IAE systems.	On April 4, 2022 Government awards will be completed and reported using the Unique Entity ID (SAM)
◉ DUNS Number is authoritative	◉ Unique Entity ID (SAM) is authoritative
◉ Unique Entity ID (SAM) is available, not authoritative	◉ DUNS Number is not available

HELP ON UEI TRANSITION

Select above to get more help

Tips

- ➔ Learn more about Unique Entity ID (SAM) in FPDS, eSRS, FSRS, FAPIIS, and CPARS.
- ➔ CAGE code will NOT be affected by this transition.
- ➔ Know your Unique Entity ID (SAM) before April 4, 2022. DUNS Numbers will no longer be accepted or visible at our sites at that time.

Overview of Changes

The federal government is changing the unique identifier used by entities from the D-U-N-S® Number to the Unique Entity ID (SAM), generated by SAM.gov. On April 4, 2022, the D-U-N-S® Number will be removed and the Unique Entity ID (SAM) will be the authoritative identifier. This ID is used within SAM.gov and other government award and financial systems to identify a unique entity. The transition to the Unique Entity ID (SAM) is a federal governmentwide initiative.

What Do I Need to Do?

- ☐ **New contractors and assistance recipients registering before April 4, 2022**: Get your DUNS Number, then select Get Started in SAM.gov. As part of registration, you will be assigned a Unique Entity ID (SAM).
- ☐ **If you already have an active or expired registration**: You already have a Unique Entity ID (SAM) and do not need to take action. Learn how to view your Unique Entity ID (SAM). If your renewal is upcoming, use the normal process to renew your entity.
- ☐ **If you are a prime awardee**: Learn how to search for another entity's identifier, or request your subawardee's Unique Entity ID (SAM) directly from them. *You cannot request a Unique Entity ID (SAM) for your subawardee*.
- ☐ **Subcontractors and subrecipients who use the DUNS Number for reporting**: Get a Unique Entity ID (SAM) before April 4, 2022. Select Get Started at SAM.gov, then choose Get Unique Entity ID. *Your prime cannot request one for you.* We recommend sharing your Unique Entity ID (SAM) with the primes who need it to report subaward activities.
- ☐ **Anyone with ad hoc reports or saved searches:** Add Unique Entity ID (SAM) fields and remove DUNS Number fields from your ad hoc reports and saved searches in SAM.gov *as soon as possible*. If you do not update your reports and searches, they will not work after April 4, 2022.
- ☐ **Learn about the latest SAM.gov software updates** here. In preparation for the April 4, 2022 transition, some pages in SAM.gov entity registration were updated.

GSA U. S. General Services Administration

CITY OF SURPRISE
Regular City Council Meeting

Council Meeting Date: January 17, 2023 Contact Person: Chris Sexton
Submitting Department: Community Development District: District 1
Staff Recommendations:

Consent: No Regular: Yes Public Hearing: No Report/Discussion: No

Agenda Wording:
Consideration and action pertaining to a continuance of the application for a Major PAD Amendment to the Vista Montanas Planned Area Development as memorialized in Ordinance #2022-20, to a date certain of March 21, 2023.

Motion:
I move to continue consideration of the request for a Major PAD Amendment to the Vista Montanas Planned Area Development as memorialized in Ordinance #2022-20 to the Regular City Council meeting of March 21, 2023.

Background:
This item was originally continued to a date certain of January 17, 2023 by City council on September 20, 2022. The applicant is requesting this item be continued to the March 21, 2023 City Council meeting to allow the newly elected Council member to be fully briefed on the project and the community's concerns. The subject requests a Major PAD Amendment to the Vista Montanas Planned Area Development. This request is for the following: 1) increase the overall density from 2.4 du/ac to approximately 2.9 du/ac; 2) update the lot sizes and distribution of lots throughout the site; 3) increase the total open space allotment from 12 percent to 20 percent; 4) update the previous design option point system to match the development standards consistent with the Land Development Ordinance (LDO) and Planning and Engineering Design Standards (PEDS); and; 5) update the conceptual development plan and roadway network. FS22-0438.

Objective Analysis:
The subject PAD Amendment is in harmony with the purposes and intent of the Vista Montanas PAD, in addition to other applicable City of Surprise regulations. All city reviewing departments have reviewed the request and expressed no concerns.

Policy Compliant:
The subject parcel is consistent with the intent of the Land Development Ordinance and advances the goals and policies of the General Plan.

Financial Impact:

While this item does not have an immediate or direct financial impact, ongoing development activity in the City will inevitably have a future financial impact as additional resources are needed to provide city services.

Budget Impact:

There is no anticipated budget impact related to this item.

FTE Impact:

This item does not have an impact on current staff levels.

ATTACHMENTS: